SDS Feet Configurations

The feet attached to the bottom of the SDS can be configured to suit the anti-vibration plate and the PRC-4022 Power Supply. The below images show the appropriate feet positions for each configuration.

SDS to fit Anti-Vibration Plate:

SDS to fit PRC-4022:

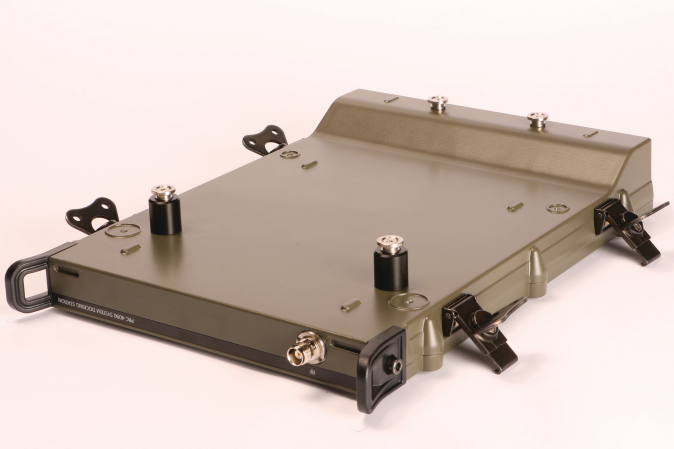

Handset Docking Station Configurations

The Handset Docking Station can be configured for either portrait or landscape use of the Control Handset. The exploded diagrams below show each of these configurations.

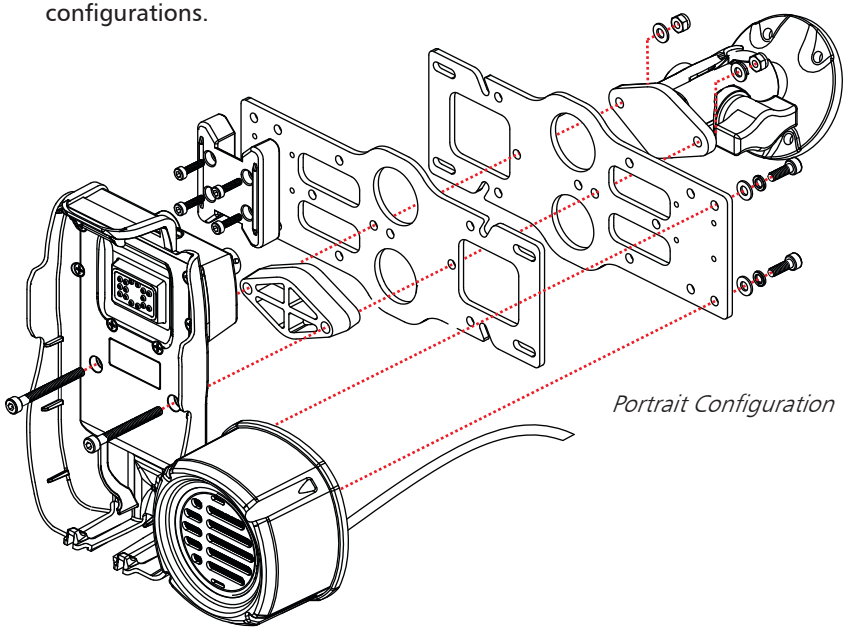

Portrait Configuration

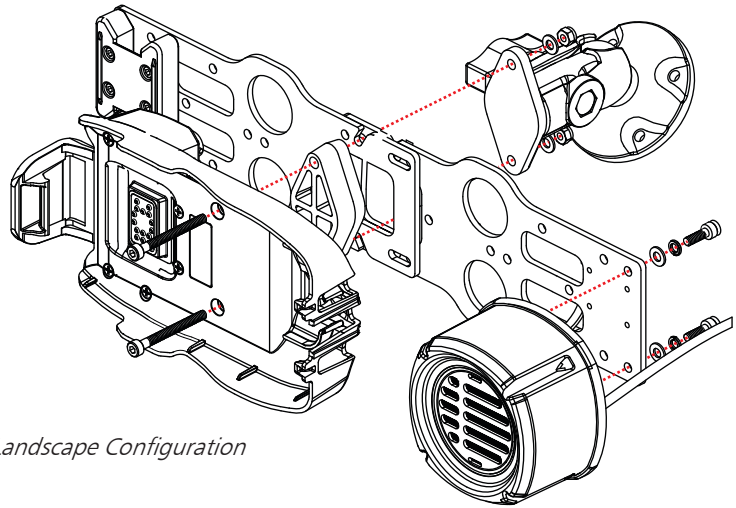

Landscape Configuration

Audio Routing

When using the Handset Docking Station, the audio from the PRC-4090 Control Handset is routed differently depending on the accessories attached. Below outlines the most common configurations and their audio routing.

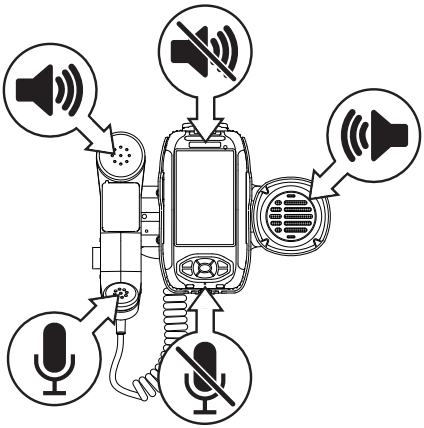

Control Handset, H250 and External Speaker

- Control Handset mic and speaker are disabled
- External speaker is enabled
- H250 mic and speaker enabled
- Volume control via the Control Handset

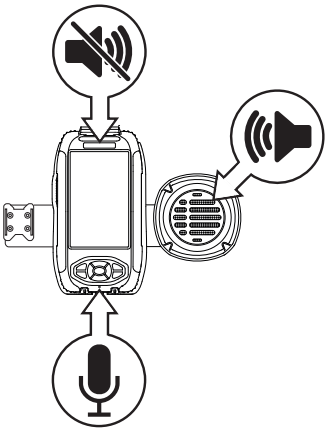

Control Handset and External Speaker

- Control Handset speaker is disabled
- Control Handset mic is enabled
- External speaker is enabled
- Volume control via the Control Handset

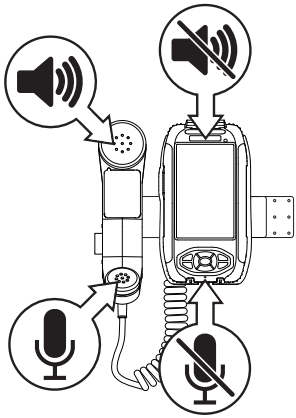

Control Handset and H250

- Control Handset mic and speaker are disabled
- H250 mic and speaker enabled
- Volume control via the Control Handset

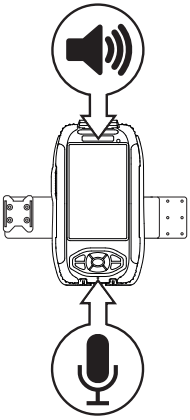

Control Handset

- Control Handset mic and speaker are Enabled
- Volume control via the Control Handset

Complete Mobile Assembly

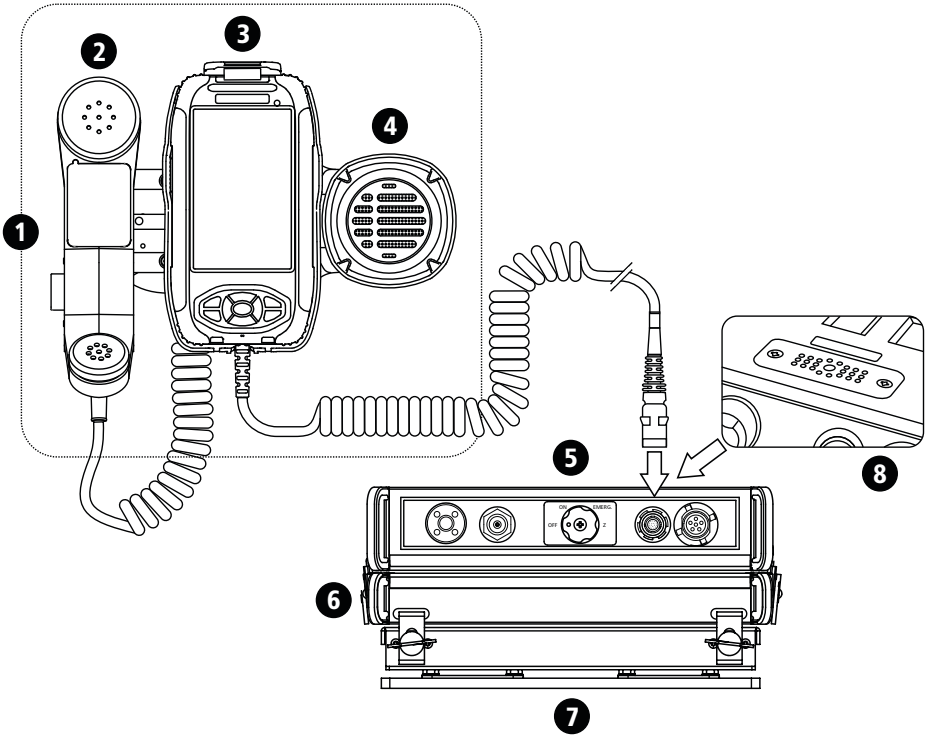

1	PRC-4090 Control Handset (P/N 4090-01-09) and Control Handset Docking Station (P/N 4090-05-03)
2	H250 Tactical Handset (P/N 4090-01-14)
3	PRC-4090 Handset Cradle (P/N 4090-05-01)
4	Ext. Speaker (P/N 4090-01-33)
5	PRC-4090 HF SDR Transceiver (P/N 4090-00-01)
6	PRC-4090 System Docking Station (P/N 4090-05-00)
7	PRC-4090 Anti-Vibration Mounting Plate (P/N 4090-05-07)
8	Hotshoe Accessory connector

Transceiver Mounting

The following points must be considered when mounting the transceiver.

Safety

It is essential that the transceiver be mounted in a place where it cannot cause injury to the occupants of the vehicle in the event of a motor vehicle accident. For this reason overhead mounting is not generally recommended and “under dash” mounting must take into account the possibility of injuring the legs of front seat occupants.

Convenience

The chosen position for the transceiver or control handset, (if in mobile configuration) should be one which allows convenient operation.

Positions which are often used are:

On the centre console

In place of the glove box

Behind the seat

Under the seat

Under the dash board (if safe).

Where in mobile configuration, only the control handset need be mounted convenient to the operator. The transceiver may be mounted under a seat, in the luggage compartment or any other appropriate place within the vehicle (which allows for sufficient air flow).

All equipment should be positioned in such a way that convenient access for maintenance is provided.

Strength

It must be assumed that the vehicle will be used on rough roads and in many cases off road. Hence, the mounting of equipment must take into account the severe vibration and shock that may be encountered.

Transceivers may only be mounted to structural components of the vehicle body and not on interior panels. In some cases, the area around the transceiver mounting may need reinforcement.

Precautions should be taken to ensure fixing screws etc. cannot vibrate loose.

Air Circulation

The PRC-4090 relies on air flow around cooling fins to dissipate heat generated by the transmitter. The mounting position must allow free airflow around these fins.

Obstruction

The installation of a transceiver into a vehicle should not inhibit the normal use of the vehicle. Before selecting equipment positions, check that normal operation of steering, foot pedals, gear change, hand brake etc. are not impeded, and that heater or air-conditioning outlets, glove box and doors are not obstructed. Always check that the drilling of mounting screw holes will not damage electrical wiring, heater hoses or hydraulic lines.

Power Wiring

Connect the red positive and black negative wires from the transceiver power cable to the positive and negative terminal of the battery. Do not connect to the ignition switch or internal fuse panels as vehicle wiring to these points is of insufficient current capacity, causing voltage drop, possible noise interference and damage to cables through overheating. To prevent this, consider the following:

- Route the power cable away from high tension ignition wiring.
- Secure the power cable, either to other wiring or the vehicle body, with suitable cable ties.
- Where wiring passes through bulkheads, provide appropriate protection to prevent insulation being damaged.
- If an isolation switch is fitted between the battery's negative terminal and the vehicle chassis then it is important to connect the radio's negative supply cable to the chassis side of the isolation switch.

Grounding

Ideally the transceiver should be mounted as close as possible to the antenna with a common grounding (earth) point being used for both the antenna's ground (earth) connection and the transceiver's ground (earth) connection. See page 147, page 150, page 144 and page 183 for additional information regarding appropriate antenna grounding (earthing).

Antenna Mounting

The antenna mounting must provide a strong secure anchorage for the base of the antenna. To obtain maximum radiation, the antenna base must be well bonded electrically to the vehicle chassis. Paint, dirt, rust, etc. should be removed from the respective fixing points. The mounting point must provide a low resistance electrical path to the main vehicle metallic structure.

Due of the need to reduce the size of HF antennas so that they can be fitted to a vehicle, mobile antenna bandwidth becomes quite narrow and hence tuning is critical. In most cases the only tuning adjustment that can be affected is adjustment to position. Particular attention must be given to the antenna position if satisfactory performance is to be obtained. Refer to the instructions supplied with the antenna you have selected.

Antenna Feed Cables

Antenna feed cables should be run (as far as possible) away from other vehicle wiring and especially away from ignition high tension wiring. Where passing through body panels or internal bulkheads, grommets must be used to protect the cables. Water-proof connectors must be used when they are outside the vehicle.

Voltage Standing Wave Ratio (VSWR)

After installation it is recommended that the VSWR of the antenna should be measured for each channel. The instructions supplied with each antenna will detail this operation.

Noise Suppression

Noise generated by motor or electrical accessories on the vehicle may cause objectionable interference to the received signal. This noise enters the receiver either by means of the battery leads or the antenna system. Providing that the recommendations concerning battery wiring given earlier in this manual are followed, noise injected via the battery lead is unlikely to be significant. Most noise problems result from pick-up by the antenna. Practical cures involve either preventing the noise from being generated or minimising it from being radiated by the wiring connected to the noise source.

Please note that some newer fuel injected engines emit very strong EMI (Electromagnetic interference) noise levels across the HF radio band, which is near impossible to suppress. For these installations, moving the position of the antenna to another position on the vehicle may reduce the noise effect but full elimination of noise during engine running may never be achieved. Please note that this is not unique to the Barrett PRC-4090 transceiver as all transceiver makes will suffer similarly from the effects of this noise under these conditions.

General Noise Suppression Tips

When searching for sources of noise, some of their characteristics can be helpful in identification:

- Petrol engine ignition noise and contact breaker noise is a sharp staccato ‘plop’ varying with engine speed. It is only with this class of noise that the impulse noise limiter incorporated within some transceivers is effective.
- Noise from other sources generally has a more ‘mushy’ sound. That from the alternator/generator may only be troublesome over a limited range of engine speed and can also be influenced by the state of charge of the battery.
- The noise from instrument regulators may depend on the battery voltage, the reading of the instrument and the length of time the system has been switched on. For this reason, the search for noise sources must be done thoroughly to prevent noise from apparently reappearing after the installation has been completed.
- Electric motors generate a ‘whining’ sound. Do not forget to check windscreen wipers, electric fuel pumps, heater and air conditioning fans and other motors which operate only on an intermittent basis.

4049 Automatic Tuning Mobile HF Antenna

(Barrett P/N BC404900)

The Barrett 4049 automatic tuning mobile HF antenna plugs directly into the rear of a PRC-4090 System Docking Station using the cables supplied. Optional PRC-4090 Control Handset Extender Cable - 6.0 metres (4090-01-13)

Important: PRC-4090 transceivers must have the 4049 antenna option set during programming.

Connection Details for a PRC-4090 Transceiver with Mobile Pack and 4049 Automatic Tuning Mobile HF Antenna

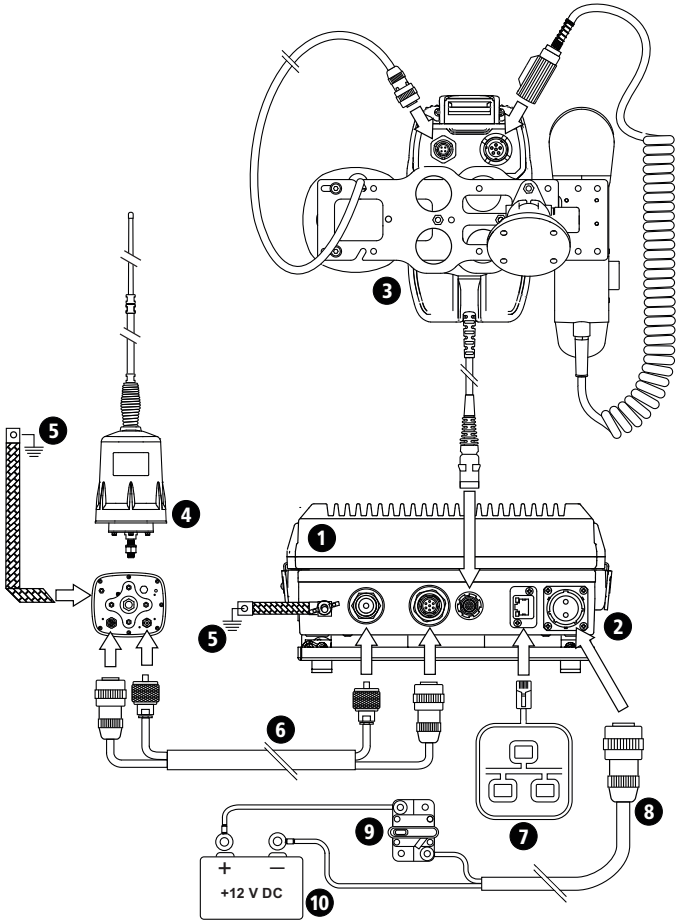

1	Barrett PRC-4090 HF SDR Transceiver (P/N 4090-00-01)
2	PRC-4090 System Docking Station (P/N 4090-05-00) and Anti-Vibration Mounting Plate (P/N 4090-05-07)
3	PRC-4090 Control Handset (P/N 4090-01-09) and Control Handset Docking Station (P/N 4090-05-03)
4	Barrett 4049 Automatic HF mobile antenna (P/N 4049-00-10)
5	Ground (earth)
6	Interface cable 6 m - integral coaxial/control with connectors to suit 4090 SDS (P/N 2019-00-02)
7	IP Network Connection via RJ45 cable
8	DC power cable and connector - 6m (P/N 4090-03-06)
9	Circuit Breaker
10	12 V (or 24 V) DC Battery

Mounting the Barrett 4049 Automatic Tuning Mobile HF Antenna

The Barrett 4049 antenna should be mounted in positions similar to those illustrated in the diagrams on the following pages. Select a position free from excessive vibration. A bracket, fabricated to withstand the forces and vibration that can be expected during off-road driving, should be used to mount the antenna to the vehicle. When locating the mounting position for the antenna ensure that the antenna body, when flexing on its vibration mount, cannot come into contact with other parts of the vehicle. The antenna should be mounted as far from surrounding objects on the vehicle as possible.

The antenna is supplied standard with two sections (Barrett P/N: BCA201901), a tapered black spring (Barrett P/N: BCA201903), an antenna installation guide and a pre-terminated six metre control cable to suit the Barrett 4049 antenna to transceiver. A six metre (Barrett P/N: BCA201904) or ten metre (Barrett P/N: BCA201905) extension cable for the control cable is also available.

The control cable should be routed into either the engine compartment or boot (trunk) of the vehicle. If the joint between the antenna control cable and the extension cable is in an exposed position, a self-amalgamating/self-bonding tape should be used to seal the joint. Do not wrap this joint if it cannot be made completely water tight as water will collect in the joint and cause it to corrode.

A good ground (earth) to the main body of the vehicle is essential for efficient operation of the antenna. To achieve this, clean all joints to bare metal and use copper braid ground (earth) straps if any non-metallic joints are encountered.

After mounting the main body of the antenna, screw the black base spring onto the antenna body followed by the whip section.

Important Information

It is ESSENTIAL to maintain the minimum clearances between the antenna and surrounding metal work as indicated in the diagrams. FAILURE TO MAINTAIN THESE CLEARANCES WILL NOT ONLY REDUCE THE EFFICIENCY OF THE BARRETT 4049 AUTOMATIC TUNING MOBILE HF ANTENNA BUT MAY ALSO LEAD TO INTERNAL RF ARCING AND FAILURE.

Important:

Considerations on the overall height of the 4049 antenna once fitted should also be considered.

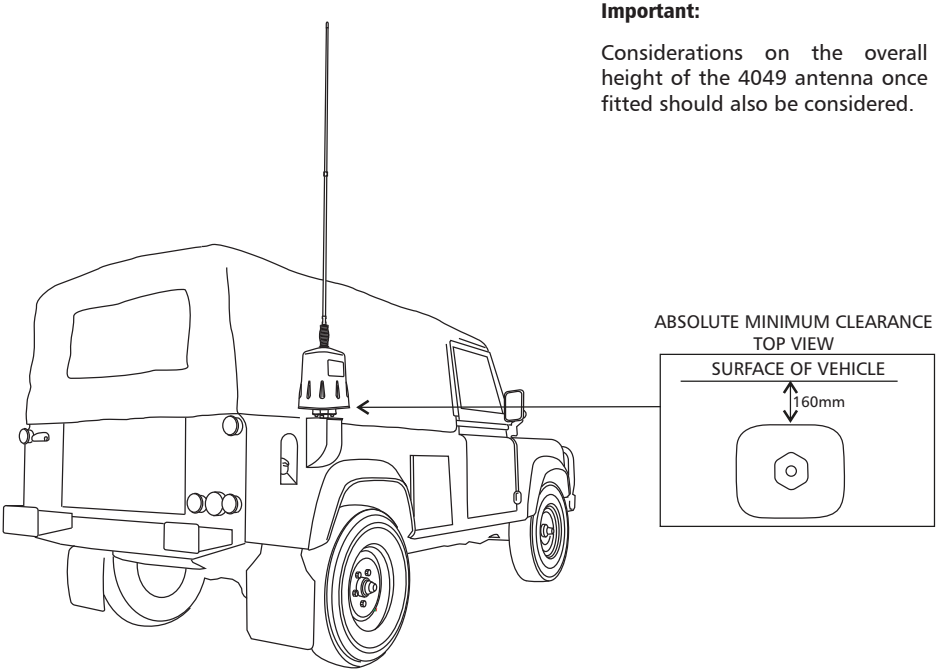

Important:

Please note that the mounting of a 4049 antenna on the front of a vehicle may be considered illegal in some areas / countries. Please check with your local transport / vehicle authority prior to installation on the front of your vehicle.

Considerations on the overall height of the 4049 antenna once fitted should also be considered.

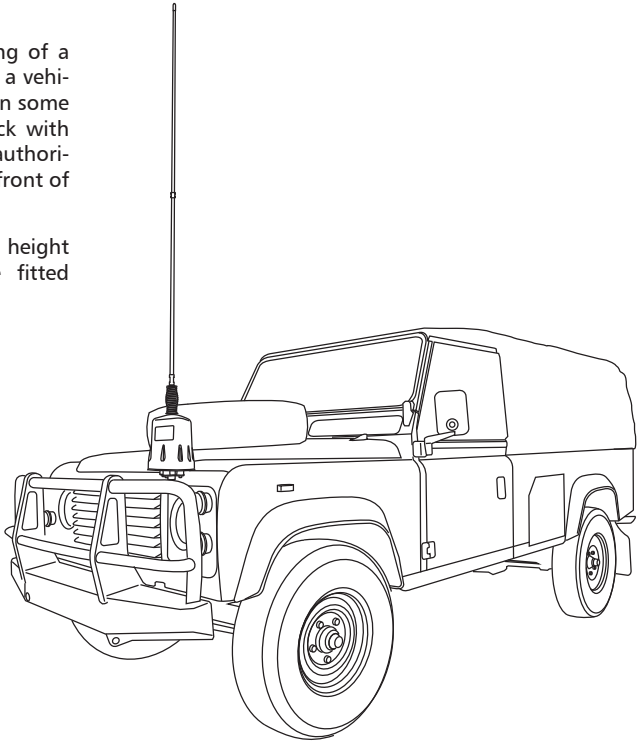

Caution:- Whilst the 4049 automatic tuning mobile HF antenna is designed to withstand vibration to military specifications on tyred vehicles, some mounting positions on large prime-movers, particularly front mounted bull bars, are subject to vibration that far exceeds this specification. Do not mount the 4049 antenna in positions such as these as damage to the antenna may result.

Grounding (Earthing) the Antenna

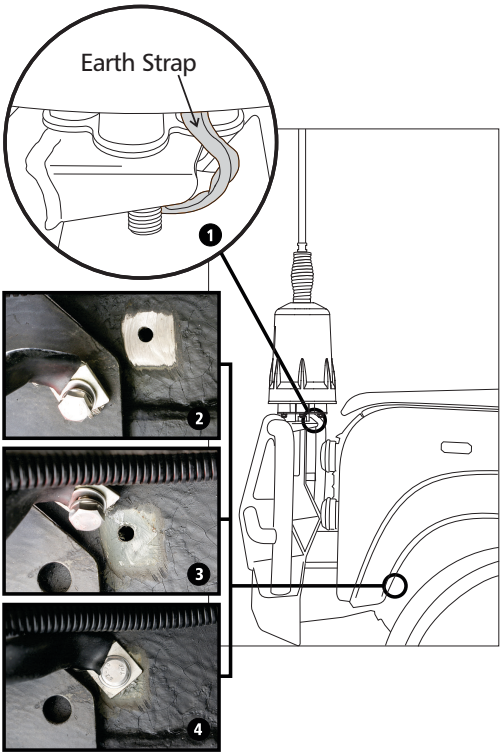

Notes:

1. Connect an ground (earth) strap to the base of the antenna
2. Grind away any paint or coating at the grounding (earthing) point on the chassis to expose the bare metal
3. Apply electrical contact grease to prevent rust and corrosion and maintain the integrity of the ground (earth) connection
4. Attach the ground (earth) strap lug securely with an appropriate fastener.

IMPORTANT: If the antenna is mounted in a high position on the rear door of a vehicle, multiple ground (earth) straps must be used to reach the vehicle chassis's grounding (earthing) point. Ground (earth) conductivity from the antenna to the chassis must be maintained for correct operation of the antenna.

Antenna Assembly

Mounting the Base Spring

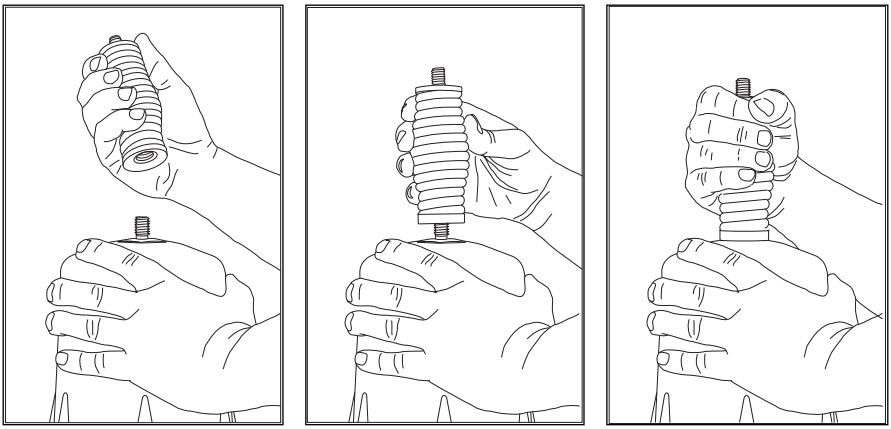

The base spring should only ever be hand tightened, if a tool is used it may damage the spring base.

Mounting the Whip Sections

To mount the whip section it is recommended that only one section of the whip is screwed onto the antenna at a time. The whip section should be hand tightened, then a suitable tool (i.e. a spanner) can be used to tighten the section a further 10 to 20 degrees clockwise while holding the antenna body with a free hand.

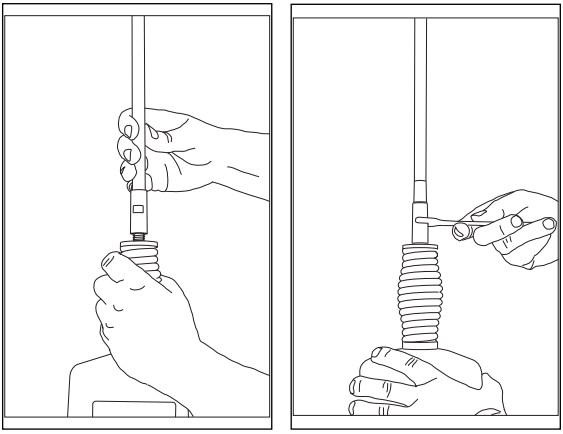

To mount two whip sections together, the unattached whip section should be hand tightened, then a suitable tool (i.e. a spanner) can be used to tighten the section a further 10 to 20 degrees clockwise while holding the already screwed on whip section with a free hand.

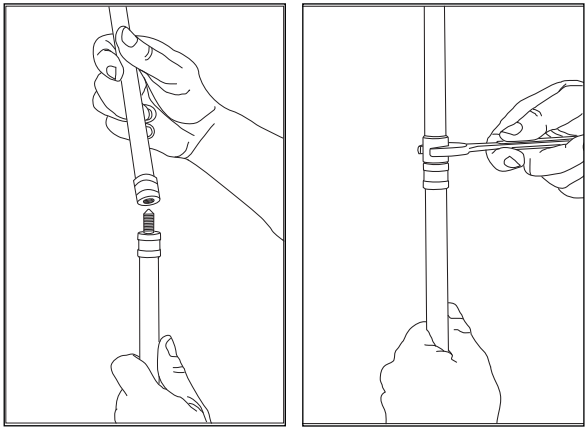

Testing the Barrett 4049 Automatic Tuning Mobile HF Antenna

To test the Barrett 4049 antenna, first select the lowest transmit frequency in the transceiver and tap **Tune**. The display should show the word "Tuning" for a few seconds, followed briefly by "Tune Passed" and an indication of the measured VSWR (Voltage Standing Wave Ratio) value. Check this reading against the VSWR meter.

Repeat the above test on the highest frequency in the transceiver and on a selection of frequencies at approximately 2 MHz intervals. If the tune passes every time, the Barrett 4049 antenna is working correctly. The Barrett 4049 antenna tunes to maximise whip current, not minimise VSWR, but the displayed VSWR value should generally be between 1.0:1 and 2.0:1. However, if the display shows "Autotune Fail" accompanied by low pitched beeps, the Barrett 4049 antenna has failed to tune. Confirm the "Antenna Type" is selected to "4049 Mobile Ant" in the transceiver Menu Settings < IO < Antenna Type setting (page 24). For possible causes check that all cables are properly connected, the earth cable from the base of the Barrett 4049 antenna has a good connection to the vehicle body (not chassis or battery), the whip fitted is not faulty or incorrect and move the vehicle if the Barrett 4049 antenna is close to any metal fences, buildings etc. If the problem cannot be resolved, contact your dealer or Barrett Service Department for advice.

NVIS Kit for 4049 antenna - P/N BCA201910

The Barrett Near Vertical Incidence Skywave (NVIS) antenna whip is designed to enhance the short range communications efficiency of the Barrett 4049 Automatic Tuning Mobile HF Antenna. The increased whip length combined with its horizontal orientation (once installed) provides a significantly higher take off angle and radiation efficiency. Communications paths over the range 20 - 500 kms, particularly in hilly and mountainous terrain, can be greatly improved through the use of the NVIS kit.

The NVIS kit comprises of a single flexible whip section of 4 metres in length which replaces the two section whip (BCA201901) supplied with the Barrett 4049 Antenna. It has fittings at each end to attach to the 2019 antenna and the optional NVIS Kit Magnetic Mounting Base (BCA201911). The whip can also be secured to the vehicle without the magnetic mounting base by using a custom made bracket with a 13mm hole (sourced by end user). This option may be preferable if the vehicle is fitted with a roof rack for example.

NVIS whip with end fittings

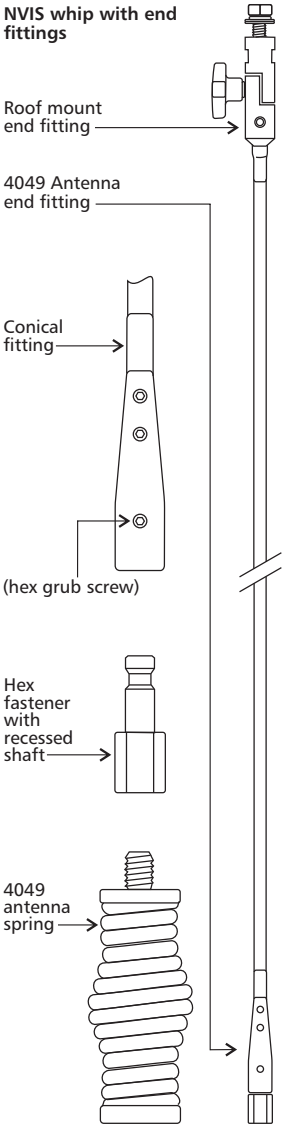

The NVIS kit can be installed as follows:

1. Remove the existing 4049 antenna whip, leaving the spring in place.
2. Unscrew the lowest hex grub screw on the 4049 antenna end of the whip so that the hex fastener with recessed shaft can be removed.
3. Tighten the hex fastener with recessed shaft onto the top threaded stud of the antenna spring with an appropriate tool.
4. Place the conical fitting over the recessed stud and tighten the hex grub screw enough so that the conical fitting can rotate but can not be separated from the recessed shaft. This will allow the conical fitting to rotate while the roof mount end is being attached and also prevent antenna end fitting damaging the vehicle by becoming detached while attaching the roof mount end.
5. Attach the roof mount end of the whip to an appropriate location (see figure 1 as a guide). It could be attached to the optional NVIS kit magnetic mounting base (see figure 3), optional NVIS kit gutter mount bracket (see figure 4) or to a custom fabricated bracket (with 13mm hole). If the magnetic mounting base is used the roof mount end must be locked into one of three angle positions by locating the pin on the surface of one side of the fitting into the hole on the surface of the other side of the fitting (see figure 2). Once the correct angle is achieved tighten the knob firmly by hand.
6. Once the roof mount end is securely in its final position, tighten the hex grub screw that was loosened in step 2.

Figure 1 Example of front and rear antenna mounting using optional Magnetic Mounting Base (P/N BCA201911).

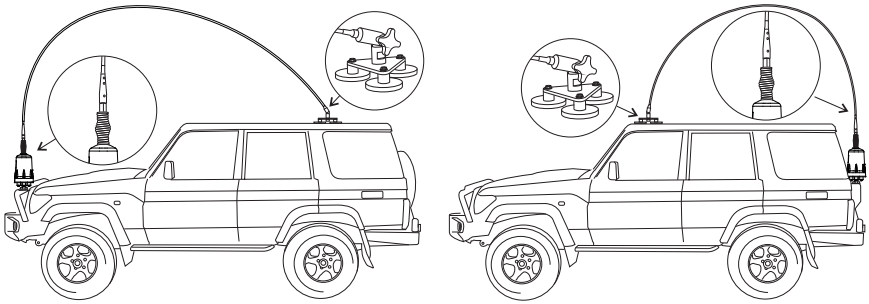

Figure 2 Adjustable roof mount fitting showing locating pin and locating holes.

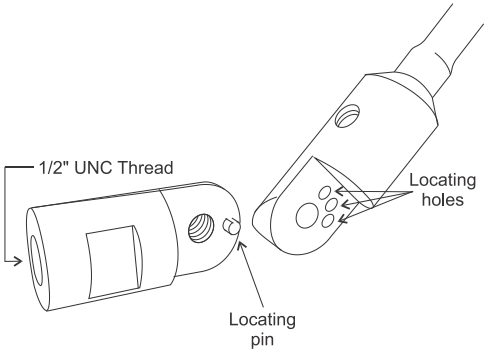

Figure 3 NVIS Kit Magnetic Mounting Base (optional) P/N BCA201911.

Base shown here with roof mount fitting attached.

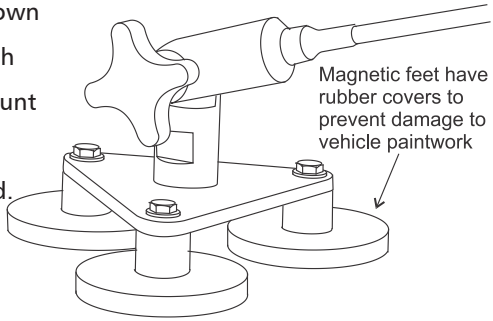
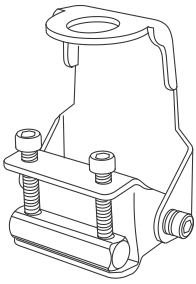
Figure 4 NVIS Kit Gutter Mount Bracket (optional) P/N BCA201912.