Theme Schedule

The Theme Schedule allows the automatic transition between display themes. This change of themes can be of use for changing, for instance, between a daytime theme and a night-time theme.

To set a theme schedule, select an alternate theme, the time when the theme will switch on and when it will switch off.

Finally, enable the Theme Schedule by changing the Theme Schedule Status to Enabled.

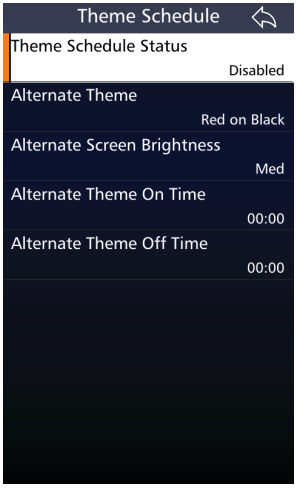

Default | Black on Green | Green on Black | Red on Black

Tuning

Tuning occurs automatically when PTT is pressed and if the appropriate antenna tuner type has been selected in RF Settings. Tuning can also be activated by pressing and holding the tune icon on the front screen.

Tune

Tuning from the tune icon on the front screen will vary in response depending on the tuner type selected.

If a non-ATU antenna is selected, the transceiver will transmit - at the power level selected - on the current channel. This is transmitted at 1.6 kHz above the Suppressed Carrier Frequency (SCF) (displayed frequency) of the channel until the tune icon is released.

If an ATU antenna has been selected, pressing the tune icon will begin a tune cycle. Tune Tx power (usually between 10 and 30W) is automatically set by the transceiver for the duration of the tune cycle. When the tune cycle begins, the tune icon can be released.

Once the tune cycle has finished, the transceiver transmit power will return to set levels.

The keypad will illuminate red whilst the transceiver is tuning.

When the tune process is completed the display will show “Tune Ok“, or “Tune Failed” in the top left-hand corner.

The VSWR briefly displays below the frequency indicating the efficiency of the selected antenna.

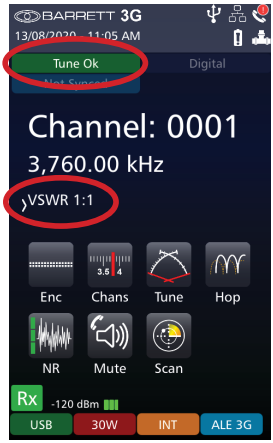

Zeroise

A Zeroise of the transceiver can be performed in two ways:

- A fast emergency zeroise can be performed by pulling and turning the on/off switch to the Z position. A ten second countdown will begin and a zeroise will be performed when zero (0) is reached. After the Zeroise is initialised, return the switch to the "ON" position.
- From the Settings < Security Menu, select Zeroise. The countdown will then begin.

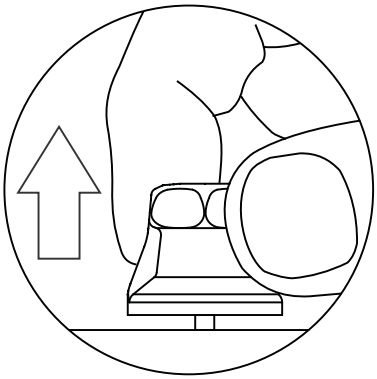

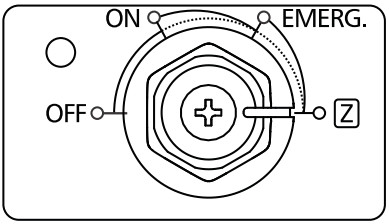

Zeroise will clear the following information from the local transceiver:

- all channel information
- all Options
- all ALE 2G and 3G information
- ALL security PINs apart from the Transceiver Lock/OTAZ PIN
- encryption keys

OR

Settings → Security

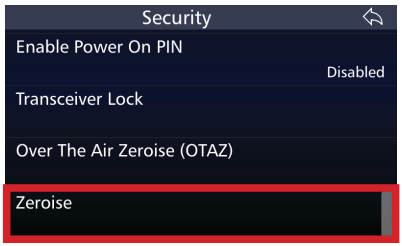

INSTALLATION 7

This chapter contains the following sections:

- Introduction
- Manpack Installations
- Mobile Installations
- Base Station Installations

Introduction

This section provides instructions for the installation of land based HF communication equipment. It is recommended that the installation be performed by a suitably qualified technician. In some equipment configurations, technical adjustment is required for the equipment to operate correctly.

Note: Some equipment has specific instructions supplied with it. Those instructions over-ride the general guidance of this manual, and must be followed in detail.

This chapter begins with connecting a secondary head to the rear of the transceiver and then outlines the most common configurations beginning with man-pack installations, followed by mobile, base station and marine installations. Please read this chapter carefully when considering the best antenna set-up for your situation.

For further information on these installations, please consult the guide provided with your antenna or contact your Barrett dealer.

Please note: When unpacking your order, check the contents against the packing notes provided. Before discarding the cartons, check that all accessories have been removed and are not mislaid in the packing material. Inspect the equipment for any transit damage. If damage has occurred, notify your supplier immediately. Failure to do this could affect the warranty covering the equipment.

Installing a Secondary Control Handset

The PRC-4090 can support a secondary control handset when paired with a PRC-4090 System Docking Station. This secondary handset can be purchased on its own from Barrett Communications and controls the transceiver in the same manner as the primary. This may be useful in multiple situations such as for security reasons, a secondary head may need to be located in another room; personnel carriers may require a head be accessible for those in the back of the vehicle; or marine installations where a secondary head may need to be away from the primary body.

Ensure the transceiver is switched off before connecting secondary control handset.

Note: If only the secondary control handset is connected then the Ethernet functionality of the SDS will not work.

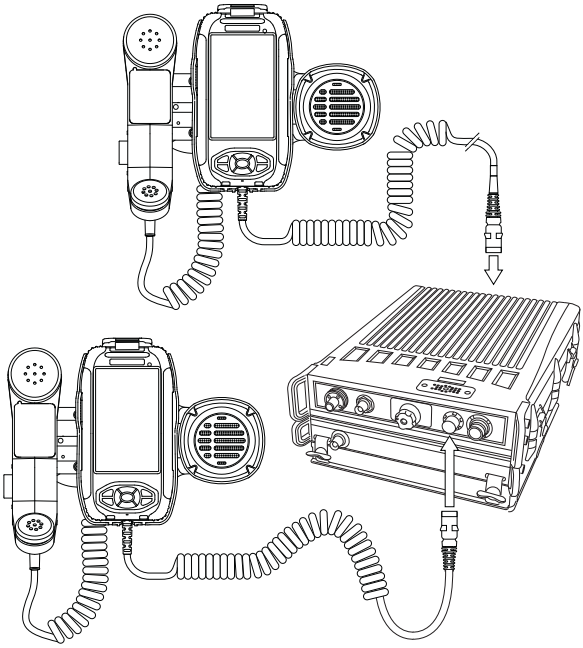

Manpack Installations

When combined with a battery pack, the PRC-4090 easily adapts to suit manpack configurations. The Control Handset can be easily mounted to molle or webbing with a molle attachment.

NOTE: MANPACK UNIT IS NOT TO BE USED TO TRANSMIT WHILE BEING TRANSPORTED ON-BODY.

Control Handset Mounting

The PRC-4090 Control Handset can easily be mounted to webbing or molle using the PRC-4090 Molle Attachment (P/N 4090-05-02).

The transceiver can be stored screen facing outwards or reversed so that the screen is protected.

The Molle Attachment can also be used to attach to solid surfaces.

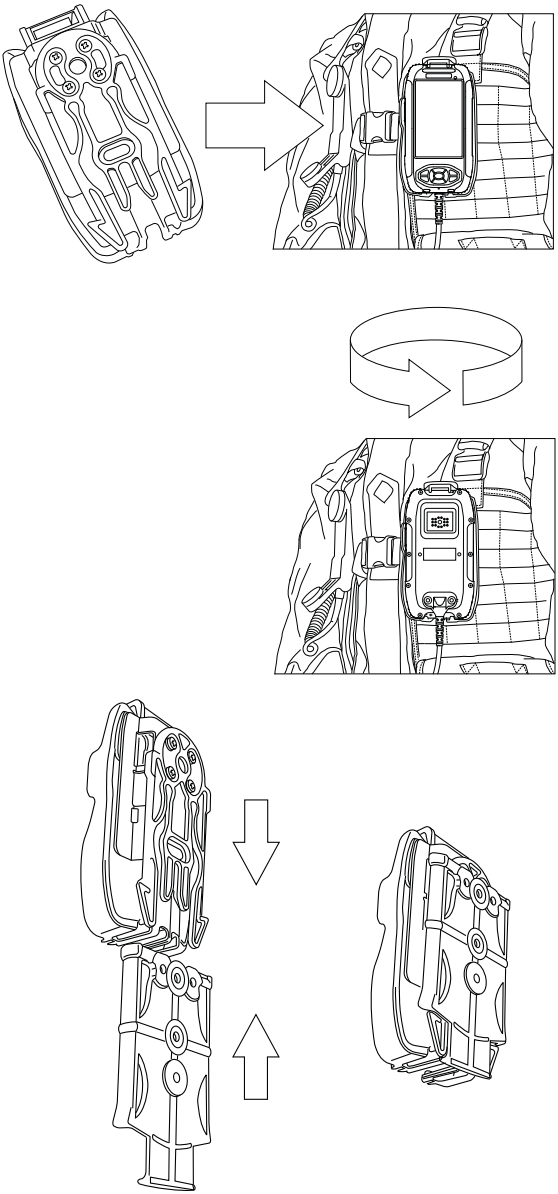

Audio Routing

When in manpack configuration, all audio and microphone options are active as illustrated by the below images.

Volume for both the PRC-4090 Control Handset and the H250 handset are controlled by the PRC-4090 Control Handset.

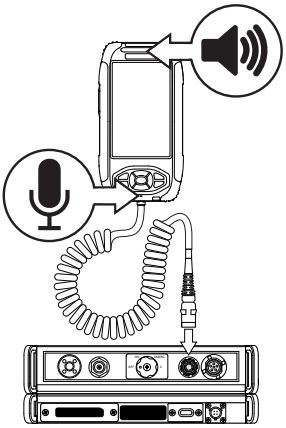

Control Handset

- Control Handset mic and speaker are enabled
- Volume control via the Control Handset

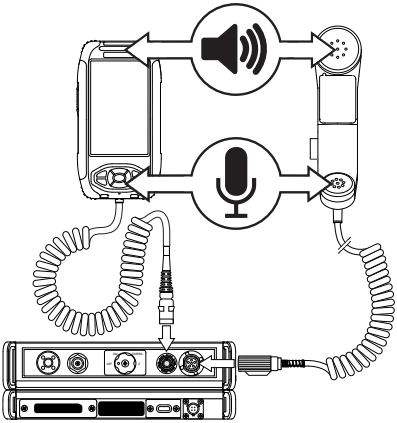

Control Handset and H250

- Control Handset mic and speaker are enabled
- H250 mic and speaker are enabled
- Volume control via the Control Handset

Battery Pack

The Barrett PRC-4090 Transceiver can be powered in multiple ways. For manpack use, it has been designed to use the Barrett PRC-4090 16Ah Battery pack or external military battery. The PRC-4090 Battery Pack has an in-built charger/ battery management system. This battery pack can be charged in multiple ways as outlined over the following pages.

With the battery pack fitted, the transceiver can be operated and the battery pack charged simultaneously when a DC input of between 10 V DC and 60 V DC is supplied to the unit.

Additionally, the PRC-4090 battery pack can be charged connected or disconnected to the manpack using the AC/DC input universal power adaptor unit or directly from a 12 or 24 V tactical solar panel (MPPT charger fitted for optimised current input), or BB series military battery.

CAUTION: Risk of explosion if the battery is replaced by incorrect type.

Removing the battery isolator

The 16Ah battery pack (P/N 4090-03-05/BCA409005) is, by default, shipped with the battery cells isolated (see below). To use the battery, the cells must be connected. Follow the steps below to switch the isolator from“Battery Isolated” to “Battery Connected”.

Isolated

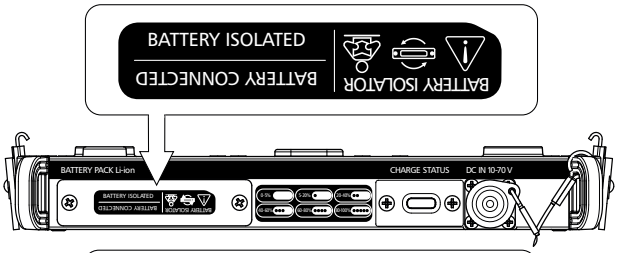

Connected

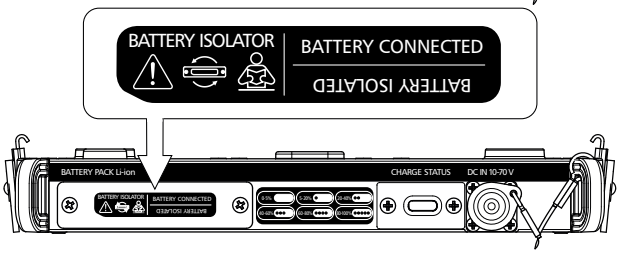

1. Ensuring that nothing is connected to the battery, use a Philips head screw driver to remove the screws securing the isolator in place, as shown opposite.

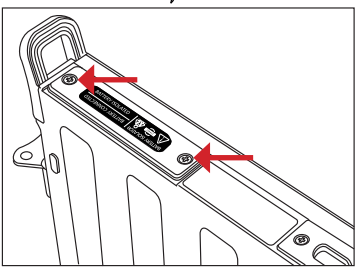

2. Remove the isolator.

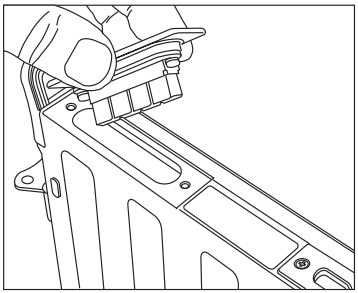

3. Turn the isolator 180° and gently replace the isolator evenly in the socket, ensuring that “Battery Connected” is now at the top of the isolator.

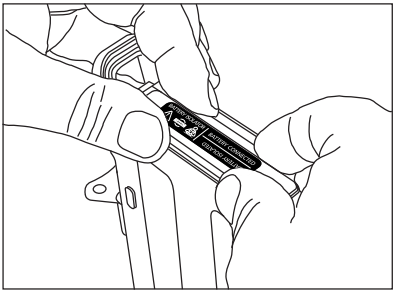

4. Return the screws to their original positions. The e-ink display will turn black.

5. Connect the charger to the battery to begin use.

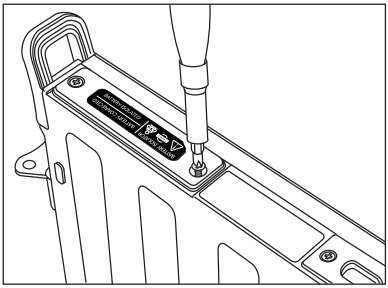

Re-isolating the battery

1. Ensuring that nothing is connected to the battery, remove the screws securing the isolator with a Philips head screw driver.

2. Using an appropriate tool, gently and evenly prise the isolator from the socket (see opposite).

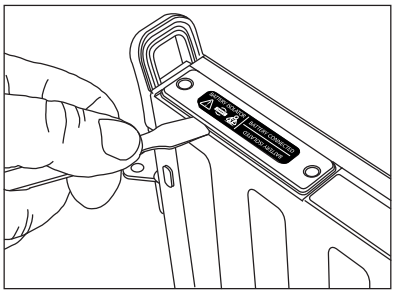

3. Turn the isolator 180° and gently replace the isolator evenly in the socket, ensuring that “Battery Isolated” is now at the top of the isolator.

4. Return the screws to their original positions.

AC/DC Input Universal Power Adaptor Unit P/N 2090-03-01

For operation from a mains voltage between 100-254 V AC sources:

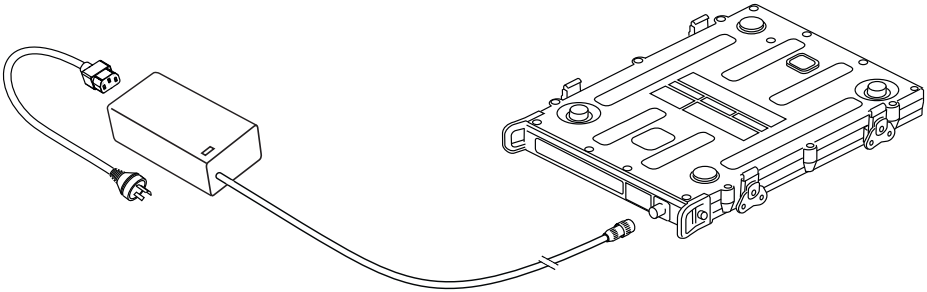

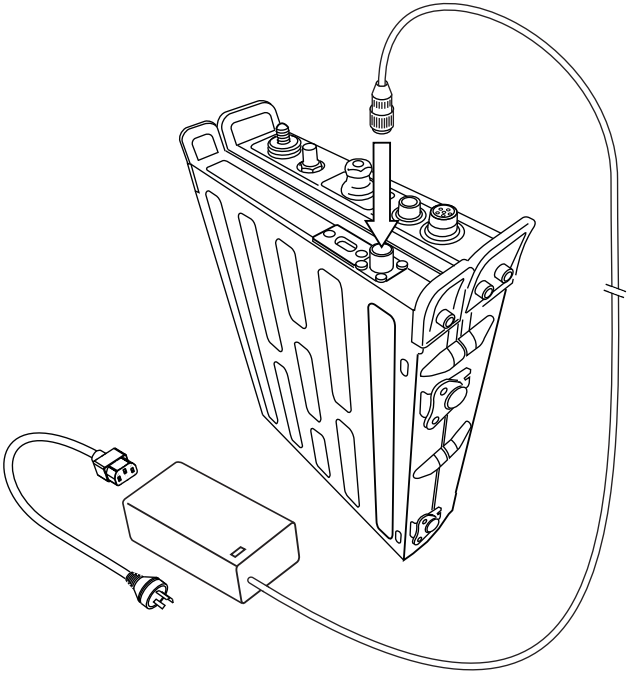

Tactical Solar Panel P/N 2090-03-02 or 03

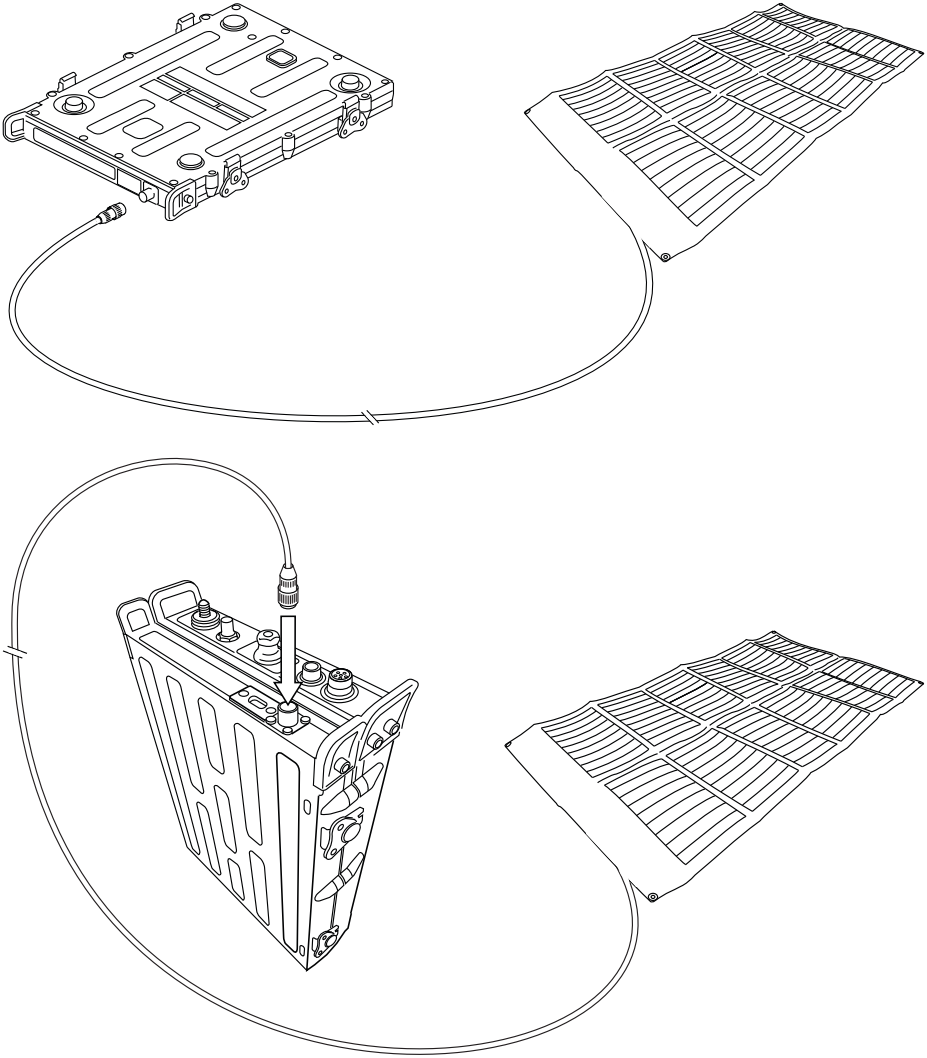

Military battery

The PRC-4090 can interface with off-the-shelf Military standard batteries such as BB series batteries. To interface with such batteries, the adaptor and interface cable are required.

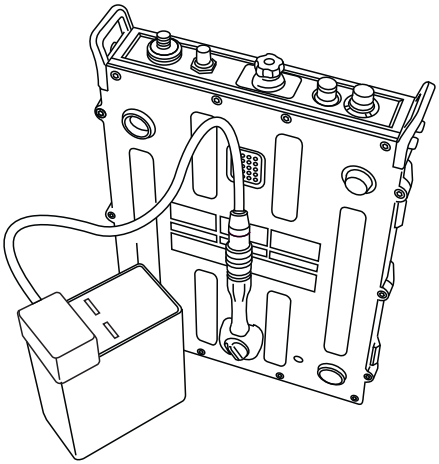

Battery Charge Indicator of the 4090

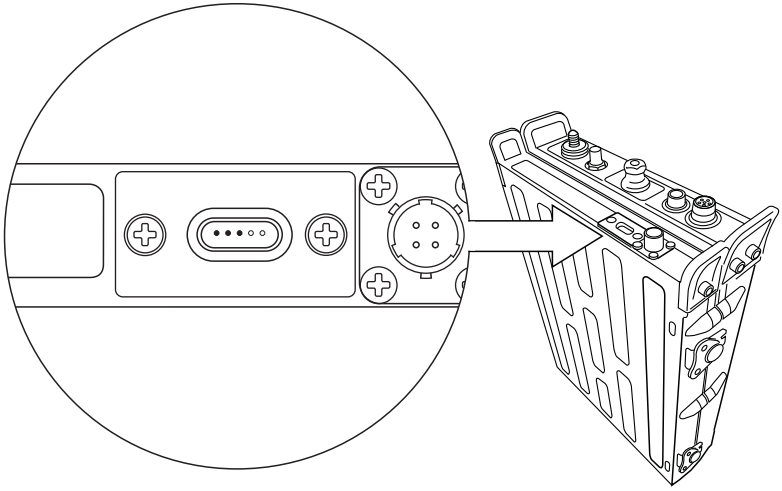

The e-ink display of the PRC-4090 Battery Pack displays five dots indicating battery charge levels:

	Zero dots	<5%
●	Solid 1 black dots	5%-20%
● ●	Solid 2 black dots	20%-40%
● ● ●	Solid 3 black dots	40%-60%
● ● ● ●	Solid 4 black dots	60%-80%
● ● ● ● ●	Solid 5 black dots	80%-100%

When charging the 4090 Battery Pack, the LED indication will animate.

5 running dots: Filling up 0 - 20% charge

1 solid dot and 4 running dots: 20% - 40% charge

2 solid dots and 3 running dots: 40% - 60% charge

3 solid dots and 2 running dots: 60% - 80% charge

4 solid dots and 1 dot blinking: 80% - 95% charge

5 dots: charge complete

The Control Handset display will also display the following icon when charging:

Tactical Antenna Options

The PRC-4090 manpack can be used with the 10 metre throw over long-wire provided or the optional 3 metre collapsible whip.

Note: Either the whip or the long-wire can be used but not both together.

Collapsible Whip Antenna (P/N 4090-02-07)

The gooseneck is fitted to the whip antenna stud and the whip to the gooseneck by bayonet fitting. The whip antenna should then be unfolded to its maximum height. When a call is received extend the antenna to full height before transmission.

When using an un-tuned antenna such as the whip or the long-wire the selection "Antenna Type" (see page 24) in the standard menu should be used to enable the automatic tuner i.e. select "Whip/Long-wire" operation. When this is selected the in-built tuner automatically tunes the whip or long-wire whenever the unit transmits after a channel change.

Note: Do not use the whip antenna near metallic structures. This can produce high voltages within tuner and may cause damage.

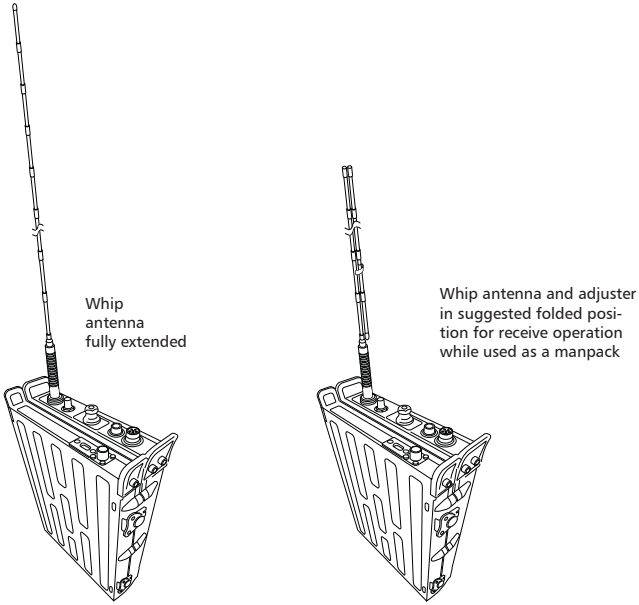

Throw Over Long-wire Antenna (P/N 4090-02-06)

The long-wire antenna should be unfurled and the end away from the man-pack Transceiver should be attached to any structure available and as high as possible.

When using an un-tuned antenna such as the whip or the long-wire the selection “Antenna Type” (see page 24) in the standard menu should be used to enable the automatic tuner i.e. select “Whip/Long-wire” operation. When this is selected the in-built tuner automatically tunes the whip or long-wire whenever the unit transmits after a channel change.

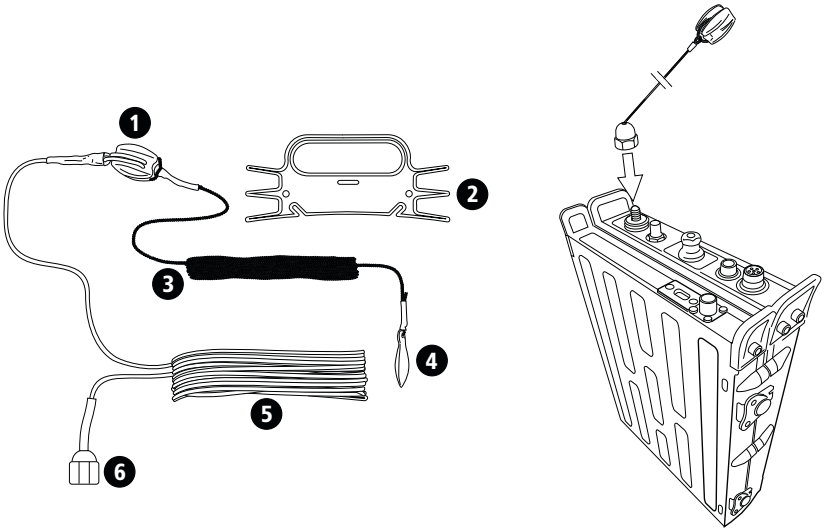

1	Balun
2	Spool
3	Cord
4	Weight
5	Antenna
6	Coaxial connector

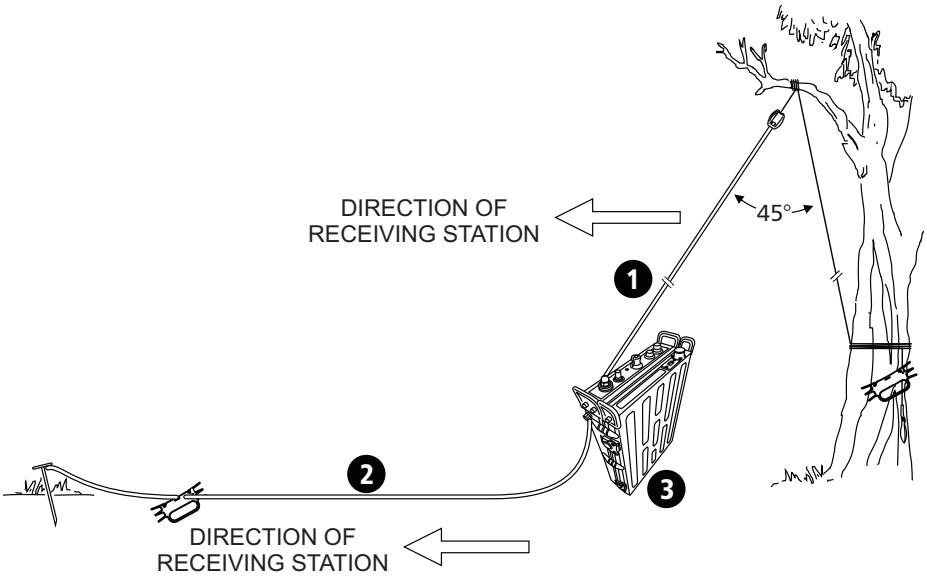

1. Antenna
2. Earth (ground)
3. PRC-4090 Transceiver (P/N 4090-00-01)

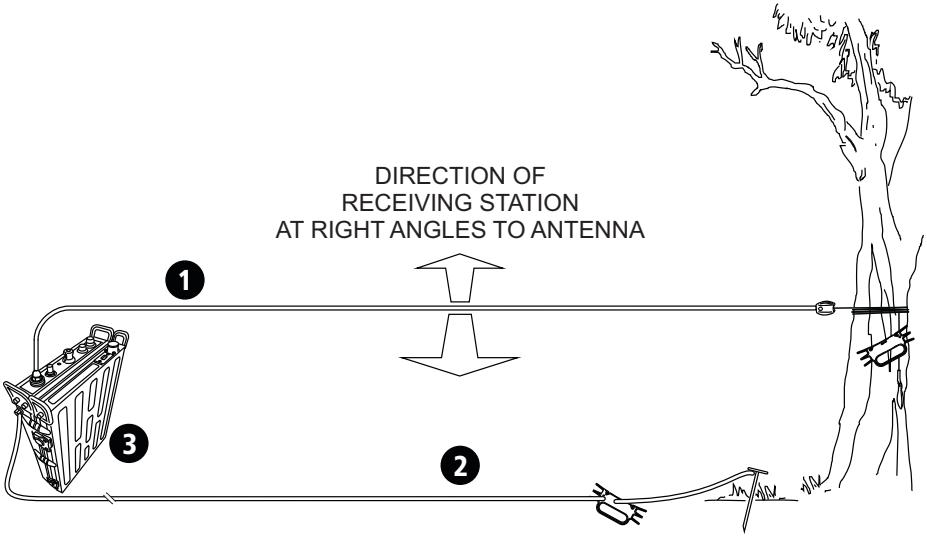

1. Antenna
2. Earth (ground)
3. PRC-4090 Transceiver (P/N 4090-00-01)

Single-wire Counterpoise (P/N 4090-02-09)

When using either a whip or the long-wire antenna use of the counterpoise supplied is recommended for better efficiency. This is connected to the PRC-4090 via the ground post.

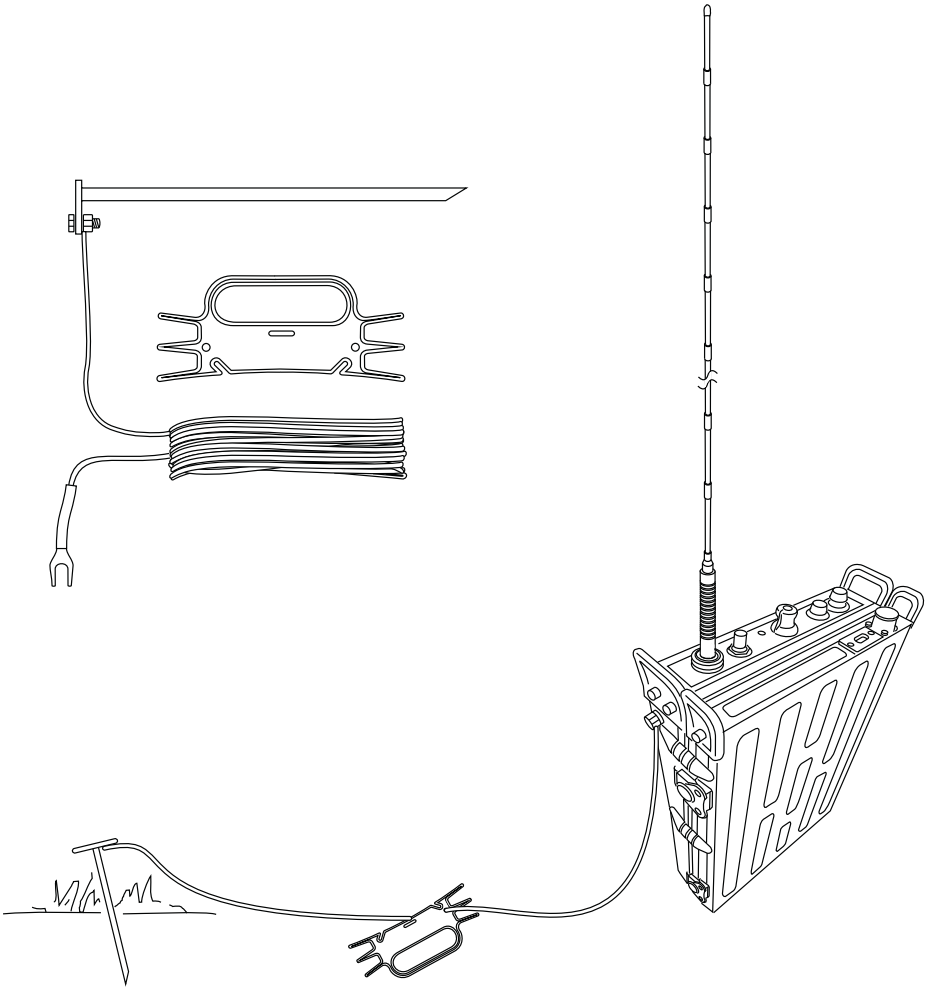

Tactical Tuned Wire Dipole Antenna (2090-02-01)

The Tactical Tuned Dipole Antenna is a tuned antenna with frequency labels to indicate tuned lengths. For operation, each side of the antenna is unwound to the tuned length for the frequency required. For operation at a labelled frequency, the label should be level with the end of the winder as shown in the picture below. Lengths for intermediate frequencies should be estimated and tied off appropriately. The remaining wire remains on the winder. The throwing cord can then be used to elevate the antenna. The antenna will handle 100 W continuous data and CW transmission. The antenna can be used in a number of configurations, depending on structures available for elevation.

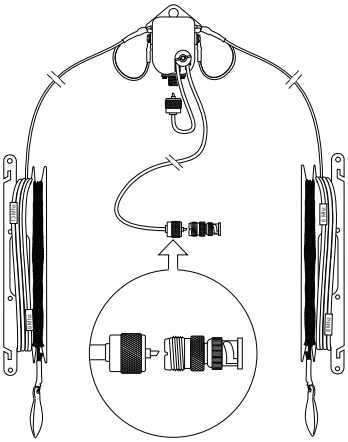

Tactical Tuned Wire Dipole Antenna Configurations

Horizontal Dipole

The horizontal dipole has maximum gain on the broadsides of the antenna, and reduced gain along the axis. Height above ground affects radiation angle. Lower heights give higher angle radiation, better for NVIS (short distance). Higher heights give lower radiation angle, better for long distance communication.

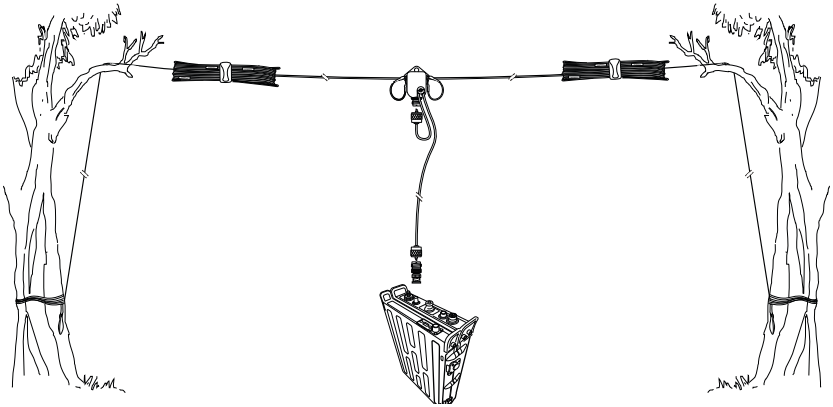

Inverted V

The inverted-V has a more omni-directional pattern than the Horizontal Dipole, with lower maximum gain. The ends of the antenna should be at least 1 m above ground. Suitable mainly for NVIS and medium distance.

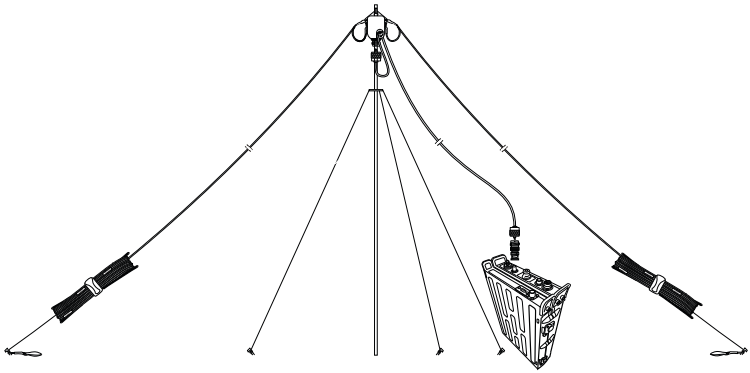

Sloping Dipole

Radiation with the Sloping Dipole becomes somewhat asymmetrical, with increased gain in the direction of the lower end of the antenna, and reduced gain towards the higher end.

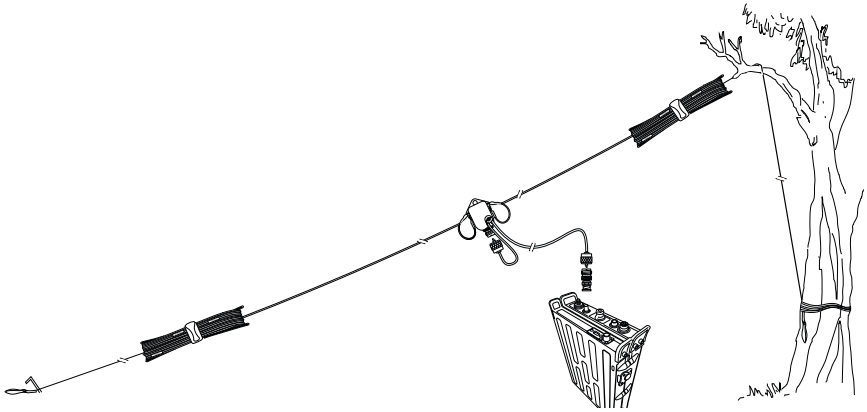

Single Ended

For rapid deployment, with reduced but still acceptable efficiency, the antenna can be operated single ended. In this configuration, one side of the antenna (labelled “antenna”) is unwound to the desired frequency and tied to an elevated structure. The central balun should be located close to the ground, and the remaining side of the antenna (“earth”) partly unwound (5 to 10 m) and stretched out on the ground below the radiating element.

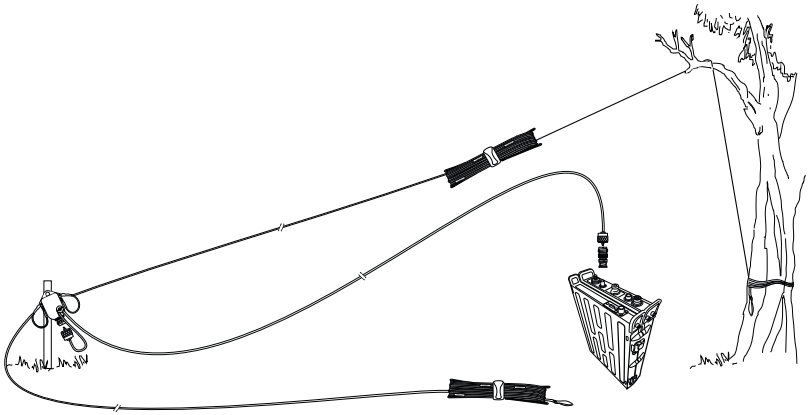

Mobile Installations

When combined with a PRC-4090 System Docking Station and Anti-vibration Plate, the PRC-4090 is easily adapted to suit mobile installations. While in this configuration, the PRC-4090 retains its ability to interface with the full range of Barrett peripherals including the 4049 Automatic Tuning Mobile HF Antenna and Barrett Linear Amplifiers.

PRC-4090 System Docking Station – Rear

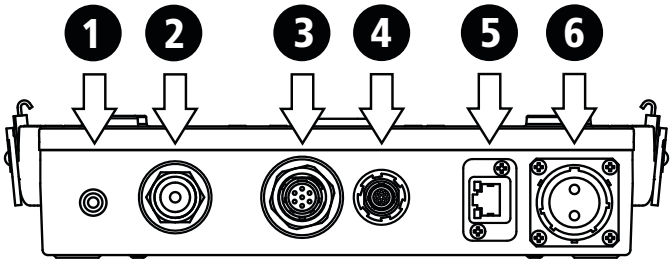

1	Earth stud
2	Coaxial connector
3	ATU connector
4	PRC-4090 Handset connector
5	Ethernet
6	DC Power In

Assembly

1. Place the SDS on top of the Anti-Vibration Plate, ensuring that the feet and capstans are correctly aligned and drop into the keyway slots.

2. Push the SDS towards the rear of the anti-vibration plate, as shown below, so that the capstans and SDS click into place.

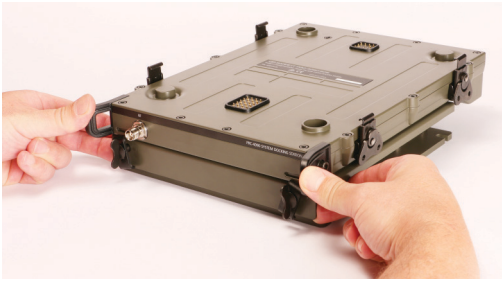

3. To secure the SDS, first ensure that the lock clamps are connected to the slots on the front of the SDS, then turn the fasteners a quarter turn.

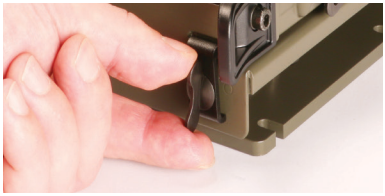

SDS Feet Configurations

The feet attached to the bottom of the SDS can be configured to suit the anti-vibration plate and the PRC-4022 Power Supply. The below images show the appropriate feet positions for each configuration.

SDS to fit Anti-Vibration Plate:

SDS to fit PRC-4022:

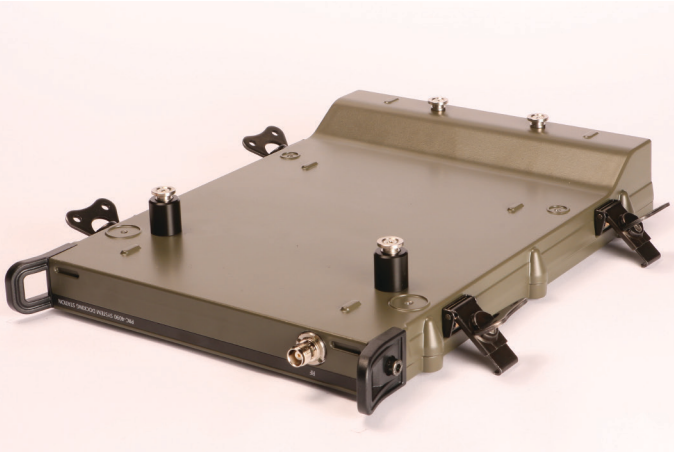

Handset Docking Station Configurations

The Handset Docking Station can be configured for either portrait or landscape use of the Control Handset. The exploded diagrams below show each of these configurations.

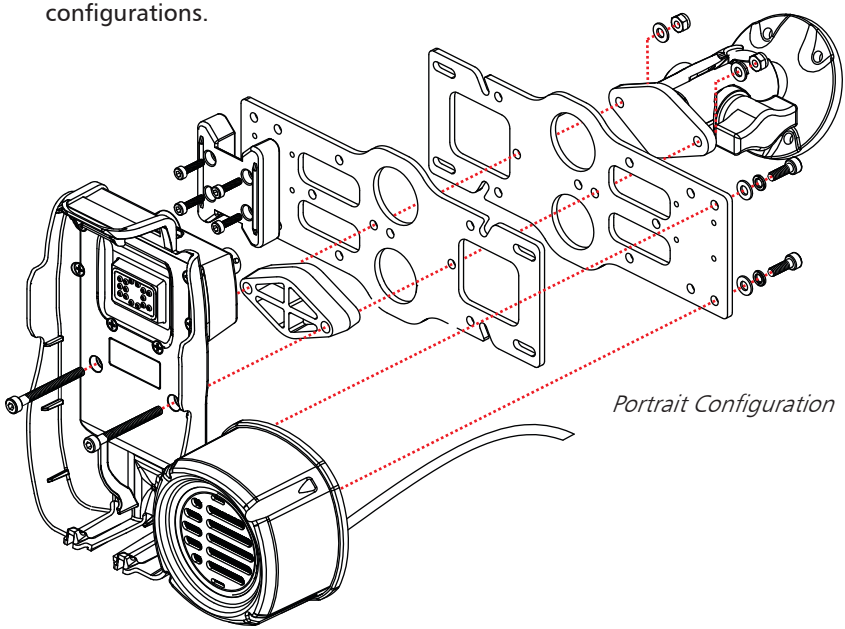

Portrait Configuration

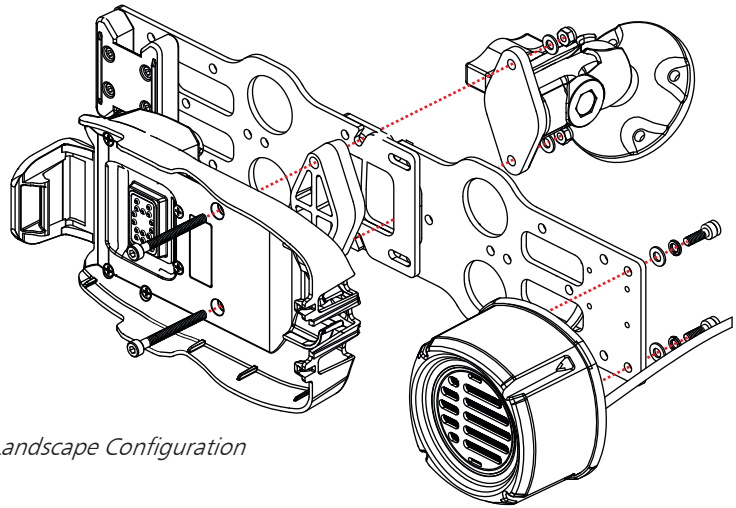

Landscape Configuration

Audio Routing

When using the Handset Docking Station, the audio from the PRC-4090 Control Handset is routed differently depending on the accessories attached. Below outlines the most common configurations and their audio routing.

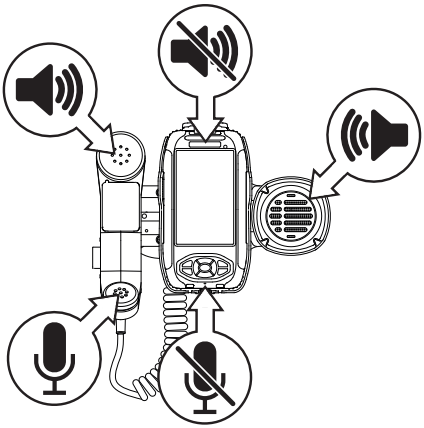

Control Handset, H250 and External Speaker

- Control Handset mic and speaker are disabled
- External speaker is enabled
- H250 mic and speaker enabled
- Volume control via the Control Handset

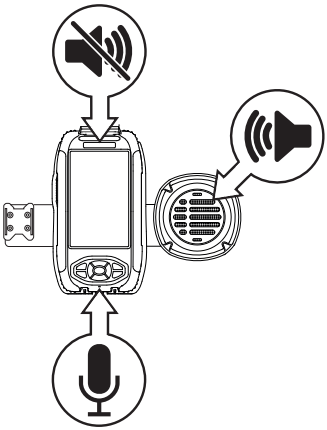

Control Handset and External Speaker

- Control Handset speaker is disabled
- Control Handset mic is enabled
- External speaker is enabled
- Volume control via the Control Handset

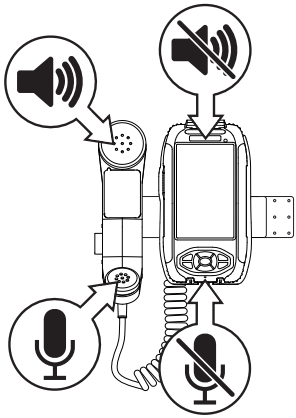

Control Handset and H250

- Control Handset mic and speaker are disabled
- H250 mic and speaker enabled
- Volume control via the Control Handset

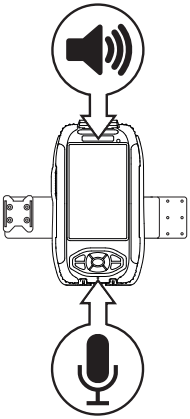

Control Handset

- Control Handset mic and speaker are Enabled
- Volume control via the Control Handset

Complete Mobile Assembly

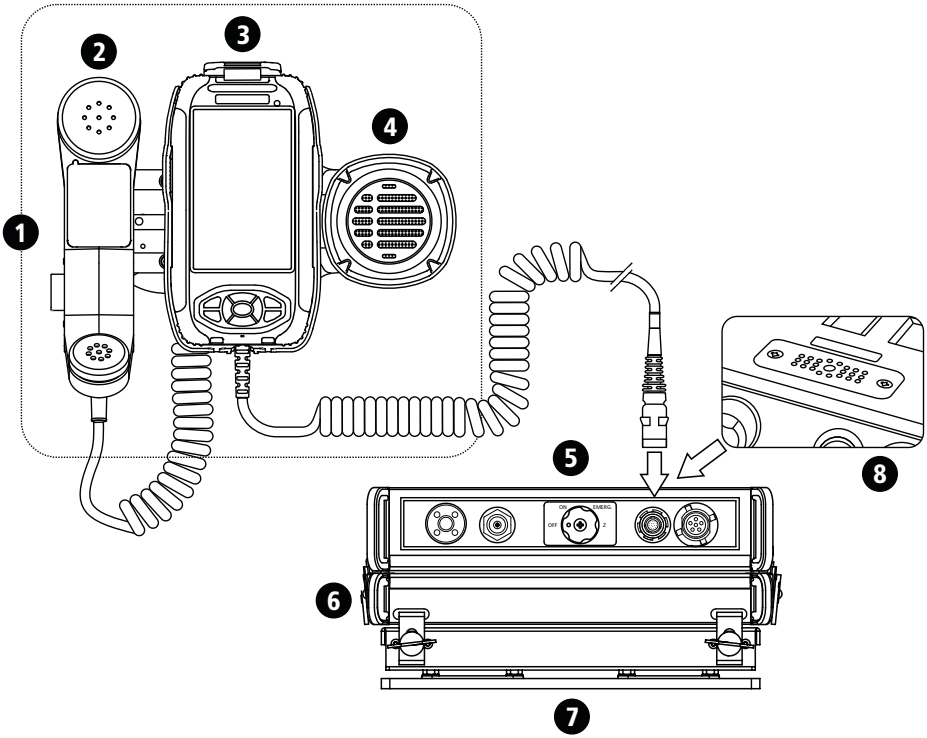

1	PRC-4090 Control Handset (P/N 4090-01-09) and Control Handset Docking Station (P/N 4090-05-03)
2	H250 Tactical Handset (P/N 4090-01-14)
3	PRC-4090 Handset Cradle (P/N 4090-05-01)
4	Ext. Speaker (P/N 4090-01-33)
5	PRC-4090 HF SDR Transceiver (P/N 4090-00-01)
6	PRC-4090 System Docking Station (P/N 4090-05-00)
7	PRC-4090 Anti-Vibration Mounting Plate (P/N 4090-05-07)
8	Hotshoe Accessory connector

Transceiver Mounting

The following points must be considered when mounting the transceiver.

Safety

It is essential that the transceiver be mounted in a place where it cannot cause injury to the occupants of the vehicle in the event of a motor vehicle accident. For this reason overhead mounting is not generally recommended and “under dash” mounting must take into account the possibility of injuring the legs of front seat occupants.

Convenience

The chosen position for the transceiver or control handset, (if in mobile configuration) should be one which allows convenient operation.

Positions which are often used are:

On the centre console

In place of the glove box

Behind the seat

Under the seat

Under the dash board (if safe).

Where in mobile configuration, only the control handset need be mounted convenient to the operator. The transceiver may be mounted under a seat, in the luggage compartment or any other appropriate place within the vehicle (which allows for sufficient air flow).

All equipment should be positioned in such a way that convenient access for maintenance is provided.

Strength

It must be assumed that the vehicle will be used on rough roads and in many cases off road. Hence, the mounting of equipment must take into account the severe vibration and shock that may be encountered.

Transceivers may only be mounted to structural components of the vehicle body and not on interior panels. In some cases, the area around the transceiver mounting may need reinforcement.

Precautions should be taken to ensure fixing screws etc. cannot vibrate loose.

Air Circulation

The PRC-4090 relies on air flow around cooling fins to dissipate heat generated by the transmitter. The mounting position must allow free airflow around these fins.

Obstruction

The installation of a transceiver into a vehicle should not inhibit the normal use of the vehicle. Before selecting equipment positions, check that normal operation of steering, foot pedals, gear change, hand brake etc. are not impeded, and that heater or air-conditioning outlets, glove box and doors are not obstructed. Always check that the drilling of mounting screw holes will not damage electrical wiring, heater hoses or hydraulic lines.

Power Wiring

Connect the red positive and black negative wires from the transceiver power cable to the positive and negative terminal of the battery. Do not connect to the ignition switch or internal fuse panels as vehicle wiring to these points is of insufficient current capacity, causing voltage drop, possible noise interference and damage to cables through overheating. To prevent this, consider the following:

- Route the power cable away from high tension ignition wiring.
- Secure the power cable, either to other wiring or the vehicle body, with suitable cable ties.
- Where wiring passes through bulkheads, provide appropriate protection to prevent insulation being damaged.
- If an isolation switch is fitted between the battery's negative terminal and the vehicle chassis then it is important to connect the radio's negative supply cable to the chassis side of the isolation switch.

Grounding

Ideally the transceiver should be mounted as close as possible to the antenna with a common grounding (earth) point being used for both the antenna's ground (earth) connection and the transceiver's ground (earth) connection. See page 144, page 147, page 144 and page 180 for additional information regarding appropriate antenna grounding (earthing).

Antenna Mounting

The antenna mounting must provide a strong secure anchorage for the base of the antenna. To obtain maximum radiation, the antenna base must be well bonded electrically to the vehicle chassis. Paint, dirt, rust, etc. should be removed from the respective fixing points. The mounting point must provide a low resistance electrical path to the main vehicle metallic structure.

Due of the need to reduce the size of HF antennas so that they can be fitted to a vehicle, mobile antenna bandwidth becomes quite narrow and hence tuning is critical. In most cases the only tuning adjustment that can be affected is adjustment to position. Particular attention must be given to the antenna position if satisfactory performance is to be obtained. Refer to the instructions supplied with the antenna you have selected.

Antenna Feed Cables

Antenna feed cables should be run (as far as possible) away from other vehicle wiring and especially away from ignition high tension wiring. Where passing through body panels or internal bulkheads, grommets must be used to protect the cables. Water-proof connectors must be used when they are outside the vehicle.

Voltage Standing Wave Ratio (VSWR)

After installation it is recommended that the VSWR of the antenna should be measured for each channel. The instructions supplied with each antenna will detail this operation.

Noise Suppression

Noise generated by motor or electrical accessories on the vehicle may cause objectionable interference to the received signal. This noise enters the receiver either by means of the battery leads or the antenna system. Providing that the recommendations concerning battery wiring given earlier in this manual are followed, noise injected via the battery lead is unlikely to be significant. Most noise problems result from pick-up by the antenna. Practical cures involve either preventing the noise from being generated or minimising it from being radiated by the wiring connected to the noise source.

Please note that some newer fuel injected engines emit very strong EMI (Electromagnetic interference) noise levels across the HF radio band, which is near impossible to suppress. For these installations, moving the position of the antenna to another position on the vehicle may reduce the noise effect but full elimination of noise during engine running may never be achieved. Please note that this is not unique to the Barrett PRC-4090 transceiver as all transceiver makes will suffer similarly from the effects of this noise under these conditions.

General Noise Suppression Tips

When searching for sources of noise, some of their characteristics can be helpful in identification:

- Petrol engine ignition noise and contact breaker noise is a sharp staccato ‘plop’ varying with engine speed. It is only with this class of noise that the impulse noise limiter incorporated within some transceivers is effective.
- Noise from other sources generally has a more ‘mushy’ sound. That from the alternator/generator may only be troublesome over a limited range of engine speed and can also be influenced by the state of charge of the battery.
- The noise from instrument regulators may depend on the battery voltage, the reading of the instrument and the length of time the system has been switched on. For this reason, the search for noise sources must be done thoroughly to prevent noise from apparently reappearing after the installation has been completed.
- Electric motors generate a ‘whining’ sound. Do not forget to check windscreen wipers, electric fuel pumps, heater and air conditioning fans and other motors which operate only on an intermittent basis.

4049 Automatic Tuning Mobile HF Antenna

(Barrett P/N BC404900)

The Barrett 4049 automatic tuning mobile HF antenna plugs directly into the rear of a PRC-4090 System Docking Station using the cables supplied. Optional PRC-4090 Control Handset Extender Cable - 6.0 metres (4090-01-13)

Important: PRC-4090 transceivers must have the 4049 antenna option set during programming.

Connection Details for a PRC-4090 Transceiver with Mobile Pack and 4049 Automatic Tuning Mobile HF Antenna

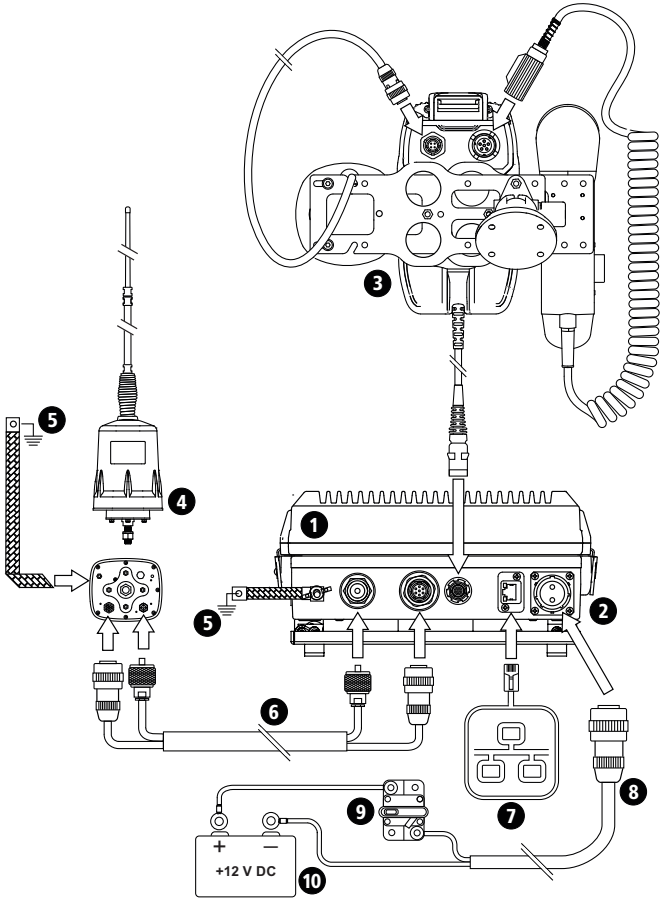

1	Barrett PRC-4090 HF SDR Transceiver (P/N 4090-00-01)
2	PRC-4090 System Docking Station (P/N 4090-05-00) and Anti-Vibration Mounting Plate (P/N 4090-05-07)
3	PRC-4090 Control Handset (P/N 4090-01-09) and Control Handset Docking Station (P/N 4090-05-03)
4	Barrett 4049 Automatic HF mobile antenna (P/N 4049-00-10)
5	Ground (earth)
6	Interface cable 6 m - integral coaxial/control with connectors to suit 4090 SDS (P/N 2019-00-02)
7	IP Network Connection via RJ45 cable
8	DC power cable and connector - 6m (P/N 4090-03-06)
9	Circuit Breaker
10	12 V (or 24 V) DC Battery