BARRETT
a Motorola Solutions Company

Operating and Installation Manual

Barrett PRC-4090 Tactical HF SDR Transceiver

Model: PRC-4090 HF SDR Transceiver

PRC-4090 System Docking Station

4090-00-02/5

© Barrett Communications

RF Exposure Warning

To ensure optimal transceiver performance and to avoid exposure to excessive electromagnetic fields, the antenna system must be installed according to the instructions provided.

High voltages exist on the antenna during transmission and tuning. Do not touch the antenna during these activities. RF burns may result.

Install the grounding system or counterpoise as directed to prevent RF burns from any metal part of the transceiver.

Safe working distance is based on continuous exposure to CW type transmissions for occupational and bystander exposure. Important Notes:

- When the PRC-4090 transceiver is used at a power level of 150 watts PEP and with a 13 dBi gain antenna, the antenna(s) used with this transceiver should be located at least 13.6 metres from the operator and should not be co-located or operating in conjunction with any other antenna or transmitter.
- When the PRC-4090 transceiver is used in a vehicular environment at a power level of 150 watts PEP with 1.5 dBi gain antenna, the antenna(s) used with this transceiver should be located at least 3.6 metres from the operator and should not be co-located or operating in conjunction with any other antenna or transmitter.
- Antenna types not included in the list below that have a gain greater than the maximum gain indicated for any type listed are strictly prohibited for use with this device.

Approved antenna types and minimum separation distance:

Antenna type	Gain (dBi)	PEP (W)	Minimum safe separation distance (m)	Typical Environment
Automatic tuned and whip	0	180	3.5	Vehicle
Multi-wire Broadband	5	180	6.1	Fixed
Automatic tuned and Whip	0	150	3.2	Vehicle
Multi-wire Broadband	5	150	5.6	Fixed
Automatic tuned and Whip	0	36	1.6	Manpack
Multi-Wire Broadband	5	36	2.8	Fixed
Automatic tuned and Whip	0	12	1.0	Manpack
Multi-wire Broadband	5	12	1.7	Fixed

It is important that the installer and operator maintain a minimum safe separation distance with the actual antenna used in the installation and to insure, in a vehicular environment, that the transmitter is only used when persons outside the vehicle are at least the recommended lateral distance away.

NOTE: MANPACK UNIT IS NOT TO BE USED TO TRANSMIT WHILE BEING TRANSPORTED ON-BODY.

The image below shows an example of minimum recommended separation distance from antenna in a vehicular environment.

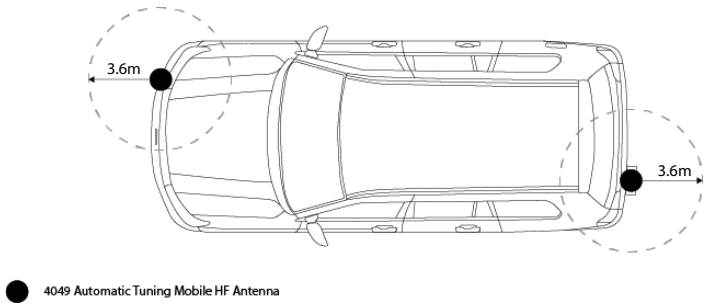

Note: References to Vehicular environments and minimum safe operating distances relate to persons outside the vehicle only and not to persons within the vehicle.

FCC RF Exposure Compliance Statement

The Barrett PRC-4090 transceivers have been evaluated and comply with the Federal Communications Commission (FCC) RF exposure limits for the General Population/Uncontrolled exposure environment.

In addition, the transceivers have been designed to comply with:

- US Federal Communications Commission Office of Engineering & Technology. Evaluating Compliance with FCC Guidelines for Human Exposure to Radiofrequency Electromagnetic Fields OET Bulletin 65, Edition 97-01, August 1997

Supplier's Declaration of Conformity

Per FCC CFR 47 Part 2 Section 2.1007(a)

PRC-4090 Manpack

FCC ID: OW4-4090HF

PRC-4090 System Docking Station

FCC ID: OW4-PRC4090MB

Responsible Party

Name: Barrett Communications

Address: 47 Discovery Dr, Bibra Lake, Western Australia, 6163

Phone Number: +618 9434 1700

Hereby declares that the product:

Model Name: PRC-4090 and PRC-4090 System Docking Station

conforms to the following regulations:

FCC part 15, subpart B, section 15.107(a), 15.107(d), and section 15.109(a)

Class A Digital Device

As a personal computer peripheral, this device complies with Part 15 of the FCC rules. Operation is subject to the following two conditions:

1. This device may not cause harmful interference, and
2. This device must accept any interference received, including interference that may cause undesired operation.

Important Safety Information

RF Energy Exposure and product Safety Guide for Mobile Two-Way Radios

CAUTION:

This radio is restricted to Occupational use only.

Notice to Users (FCC and Industry Canada)

This device complies with Part 15 of the FCC rules and Industry Canada's RSS's per the following conditions:

- This device may not cause harmful interference.
- This device must accept any interference received, including interference that may cause undesired operation.
- Changes or modifications made to this device, not expressly approved by Barrett Communications, could void the authority of the user to operate this equipment.

Under Industry Canada regulations, this radio transmitter may only operate using an antenna of a type and maximum (or lesser) gain approved for the transmitter by Industry Canada. To reduce potential radio interference to other users, this antenna type and its gain should be so chosen that the equivalent isotropically radiated power (e.i.r.p.) is not more than that necessary for successful communication.

The operation of your Barrett Communications radio is subject to the Radiocommunications Act and must comply with rules and regulations of the Federal

Government's department of Industry Canada. Industry Canada requires that all operators using Private Land Mobile Frequencies obtain a radio license before operating their equipment.

Cet appareil est conforme à la partie 15 des règles de la FCC et aux flux RSS d'Industrie Canada selon les conditions suivantes :

- Cet appareil ne doit pas provoquer d'interférences nuisibles.
- Cet appareil doit accepter toute interférence reçue, y compris les interférences susceptibles de provoquer un fonctionnement indésirable.
- Les changements ou modifications apportés à cet appareil, non expressément approuvés par Barrett Communications, pourraient annuler le droit de l'utilisateur à utiliser cet équipement.

Conformément aux réglementations d'Industrie Canada, cet émetteur radio ne peut fonctionner qu'en utilisant une antenne d'un type et d'un gain maximum (ou inférieur) approuvés pour l'émetteur par Industrie Canada. Pour réduire les interférences radio potentielles avec d'autres utilisateurs, ce type d'antenne et son gain doivent être choisis de telle sorte que la puissance isotrope rayonnée équivalente (p.i.r.e.) ne soit pas supérieure à celle nécessaire pour une communication réussie.

Le fonctionnement de votre radio Barrett Communications est soumis à la Loi sur les radiocommunications et doit être conforme aux règles et réglementations du ministère fédéral d'Industrie Canada. Industrie Canada exige que tous les opérateurs utilisant des fréquences mobiles terrestres privées obtiennent une licence radio avant d'utiliser leur équipement.

Contents

1 INTRODUCTION 1

Introduction 2

Important Disclosure 3

Terms & Abbreviations 4

The Barrett PRC-4090 HF Transceiver Overview 6

2 BASIC OPERATION 17

Starting the Transceiver 18

Keypad 18

Display 19

Swipe Menu 21

Status Info 23

Antenna Type 24

Selecting a Channel 25

Making a Voice Call 26

Making an Emergency Call 27

Receiving an Emergency Call 28

3 SELCALL 29

Overview 30

Important Selective Calling Information 31

Summary of Calling Systems 32

Setting up a Self ID 33

Setting up Contacts 34

Additional Contact Information 36

Making a Selcall 37

Beacon Call 38
Selcall 39
Telcall 41
Advanced Call History 43
Advanced Selcall Functions 47
Selcall Settings 47
Pagecall 48
GPS Request 49
GPS Position 51
Status Call 52
Secure Call 53
Hangup Call 55
Selcall Networks 56

4 BASIC SETTINGS 59
System Information 60
Head Device ID 60
Serial Number 60
Version Information 60
Transceiver Options 61
Configuration Pack Information 61
SDV/4026 Serial Number 61
General Settings 62
Audio Settings 63
Display Settings 64

5 PROGRAMMING 65
Channel Programming 66

Programming Channels Through the Handset 66
Free Scroll Rx/Tx.....70
Programming Via USB 73

6 ADVANCED OPERATION 75
ARINC Call 76
Audio - Advanced.....77
Rx Configuration 77
Tx Configuration 77
Audio Bandwidth 77
Line Audio..... 78
Line Follows Digital Voice..... 78
Line Out Level 78
Line In Level 78
Audio Record 78
Custom Filter Bandwidth 78
Collective Call 79
Digital Voice (Encoding) 80
Export 81
Frequency Hopping 82
Selecting the Hopping Band..... 82
Entering the Hopping PIN 82
Enabling and Disabling Hopping..... 82
GPS Push 83
GPS Push State..... 83
Privacy Key 83
Preamble Time 83
IO Settings 84

RS232 Connection 84
RS232 Network Encryption 84
RS232 Out (async. Indications) 84
RS232 Baud Rate 85
External Alarm Type 85
Antenna Select Behavior 85
Antenna 1 85
Antenna 2 85
Modes 87
Mute 88
Network 90
Noise Reduction (NR) 93
RF Settings 94
Rx Preamp 94
Tx Over Beep 94
Tx Timeout 95
Noise Blanker 95
Tx Power Level 95
AGC Hang 95
Broadcast Filter 95
Scanning 96
Scan Settings 97
Secure Display Mode 100
Security Settings 101
Use OEM Selcall Privacy Key 102
OEM Selcall Privacy Key 102
Frequency Hop PIN 102
Frequency Hop Rate 102

OEM Secure Type 102
OEM Secure Key 102
Secure Digital Voice/Data Key 103
Digital Voice Baud Rate 103
Selcall Secure Call Hop Rate 103
Selcall Secure Call Code 103
SDV/4026 Programming Mode 103
Service Mode 103
Enable Power On PIN 104
Transceiver Lock 104
Over the Air Zeroise (OTAZ) 104
Zeroise 104
Remote Access Password 104
Stealth Mode 105
Theme Schedule 106
Tuning 107
Zeroise 108

7 INSTALLATION 109
Introduction 110
Installing a Secondary Control Handset 111
Manpack Installations 112
Control Handset Mounting 113
Battery Pack 115
Tactical Antenna Options 122
Tactical Broadband Dipole Antenna (2090-02-03) 127
Tactical Tuned Wire Dipole Antenna (2090-02-01) 130
Mobile Installations 133

PRC-4090 System Docking Station – Rear 134
Assembly..... 135
SDS Feet Configurations..... 136
Handset Docking Station Configurations 137
Complete Mobile Assembly..... 140
4049 Automatic Tuning Mobile HF Antenna 145
Base Station Installations 156
Assembly..... 157
Cooling Fan 159
Installing the Cooling Fan 159
Connection Diagram 160
Site Selection Recommendations 162
Antennas 164
912 Multi wire Broadband Dipoles..... 164
4047 Automatic Tuning Horizontal Dipole Antenna..... 166
4045 Automatic Antenna Tuner for Base Station Installations 169

8 APPENDICES 183
Appendix 1 - Specifications 184
Appendix 2 - Connectors.....188
Appendix 3 - Overview of HF Operation 206
Appendix 4 - BITE Test 210

Warranty Statement.....213
Contact Details..... 214

Index 215

INTRODUCTION 1

This chapter contains the following sections:

- Introduction
- Terms and Abbreviations
- The Barrett PRC-4090 HF Transceiver Overview

Introduction

The Barrett PRC-4090 Tactical Transceiver is an SDR based HF SSB transceiver with a frequency range of 1.5 to 30 MHz in transmit and 250kHz -30MHz in receive. The Barrett PRC-4090 is designed using the latest technology enabling a physically small package with a full feature complement.

Designed to operate in the most arduous environments, as encountered in portable, off-road vehicles, vessels and aircraft environs, the Barrett PRC-4090 will provide many years of efficient and trouble free service.

The Barrett PRC-4090 supports features such as digital voice, data transmission and remote diagnostics as well as established features such as Selective Call (Selcall), direct dial telephone connection to base stations fitted with telephone interconnect systems (Telcall), GPS location, 2G and 3G ALE (Automatic Link Establishment) and frequency hopping. These features make the Barrett PRC-4090 HF Transceiver one of the most economical and versatile HF transceivers available today.

Up to 1000 channels are available to be field or workshop programmable. Auxiliary features such as Selcall, Telcall, scanning, mute status, alarm system etc. can be individually enabled or disabled for every channel as required to suit your operation.

The Barrett PRC-4090 Transceiver caters for increased use of HF data transmission for Internet email access and point-to-point data applications, by providing a comprehensive data modem interface port, high speed transmit-to-receive switching, a high stability frequency standard and an efficient cooling system option.

The Barrett PRC-4090 is operated by a smartphone-style touchscreen, full colour Control Handset. The handset integrates seamlessly into manpack, vehicle and base station installations when used with the cradle and cradle docking station. The streamlined design and unobtrusive size easily mounts to a vehicle dashboard or vessel helm.

The Barrett PRC-4090 Transceiver can be controlled from all major mobile and desktop platforms. Full remote control is available via the Barrett PRC-4090 Remote Control app, providing unprecedented access to all transceiver functionality across all major platforms.

Teamed with other matching Barrett products which include antennas, power supplies, vehicle tracking packages and HF modems, the Barrett PRC-4090 HF Transceiver becomes a powerful tool, providing solutions to many long distance communication requirements.

Important Disclosure

Please note that this manual describes all the features of the PRC-4090 HF SDR Transceiver and that some variants of the PRC-4090 may not have all the features installed.

Illustrations may show accessories, optional equipment or other features which are not part of the standard specification and are not available in individual countries.

Terms & Abbreviations

Term / Abbreviation	Definition
ALE	Automatic Link Establishment
AM	Amplitude Modulation
ARINC	A set of standards as established by Aeronautical Radio, Incorporated (ARINC).
Call History	A list containing details of the last thirty calls received.
CCIR	One of many possible Selcall formats as defined by the Consultative Committee on International Radio (CCIR).
CF	Custom Filter selection
CW	Continuous Wave (used for Morse code)
dB	Decibels
dBm	Power ratio in decibels (dB) of the measured power referenced to one milliwatt (mW).
DSP	Digital Signal Processing
ESU	Encryption Synchronisation Unit
FHSS	Frequency Hopping Spread Spectrum
GPS	Global Positioning System
HF	High Frequency
INT	International Selcall format
LCD	Liquid Crystal Display
LSB	Lower Sideband
LUF	Lowest Usable Frequency
MUF	Maximum Usable Frequency
OEM	Original Equipment Manufacturer, OEM Selcall Format
OTG	On-The-Go (USB)
PCB	Printed Circuit Board
PEP	Peak Envelope Power
PIN	Personal Identification Number
PRC	Portable Radio Communications
PSTN	Public Switched Telephone Network

Term / Abbreviation	Definition
PTT	Push to talk
Receive Only Channel	A channel that receives calls but does not transmit calls.
Revertive Tone / Signal	An acknowledgment signal automatically transmitted from a station receiving a Selcall.
RF	Radio Frequency
RFDS	Royal Flying Doctor Service
Scan Table	A list of channels used when scanning for incoming calls.
Selcall	Selective Calls
SCF	Suppressed Carrier Frequency
SDR	Software Defined Radio
SDS	System Docking Station
SSL	Signal Strength Level
Station ID	The ID of the station being called (the receiving station's Self ID).
Self ID	The programmed address identification number of a local station. (Used by other stations to call you.)
SMS	Short Message Service
SSB	Single Sideband (a transmission format)
Telcall	Telephone call using the Selective Call protocol.
USB	Upper Sideband
VSWR	Voltage Standing Wave Ratio

The Barrett PRC-4090 HF Transceiver Overview

Manpack Configuration

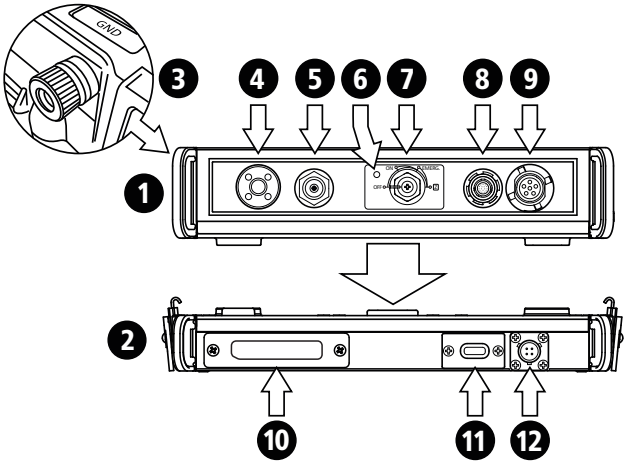

1	PRC-4090 HF SDR Transceiver (P/N 4090-00-01)
2	PRC-4090 16Ah battery pack (P/N 4090-03-05)
3	Earth stud
4	Whip antenna connection
5	50 Ohm antenna connection
6	LED status indicator
7	On/Off, Emergency and Zeroise switch
8	PRC-4090 Control Handset connector
9	H250 Handset connector
10	Battery isolator
11	Battery indicator
12	Battery charger connector

Mobile Configuration (front)

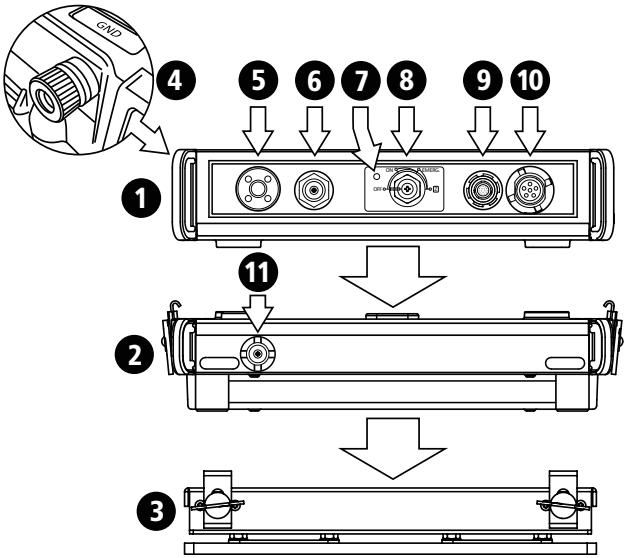

1	PRC-4090 HF SDR Transceiver (P/N 4090-00-01)
2	PRC-4090 System Docking Station (P/N 4090-05-00)
3	PRC-4090 Anti-vibration plate (P/N4090-05-07)
4	Earth stud
5	Whip antenna connection
6	50 Ohm antenna connection
7	LED status indicator
8	On/Off, Emergency and Zeroise switch
9	PRC-4090 Control Handset connector
10	H250 Handset connector
11	RF Connector (from 50 Ohm output)

Mobile Configuration (rear)

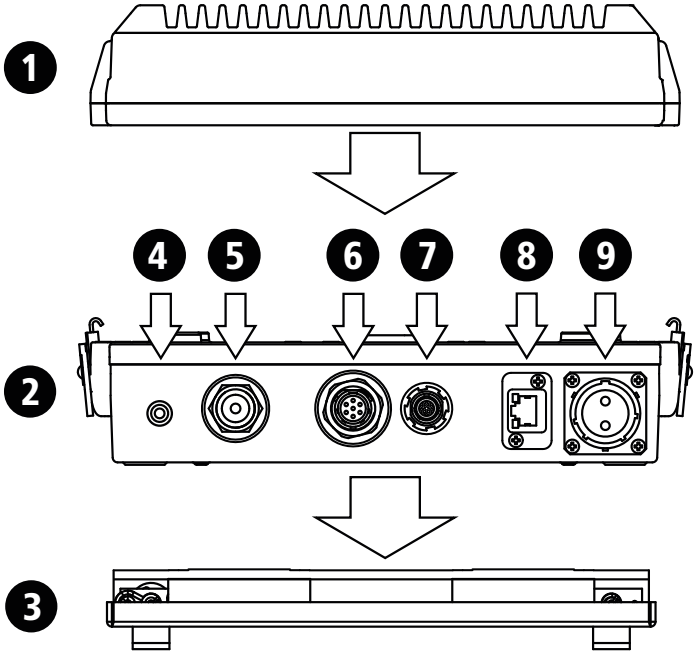

1	PRC-4090 Transceiver (P/N 4090-00-01)
2	PRC-4090 System Docking Station (P/N 4090-05-00)
3	PRC-4090 Anti-vibration plate (P/N 4090-05-07)
4	Ground
5	Coaxial connection (RF out)
6	ATU Connector
7	Aux. PRC-4090 Control Handset connector
8	Ethernet connection (RJ45)
9	DC in (+11 V to +28 V DC)

Base Station Configuration (front)

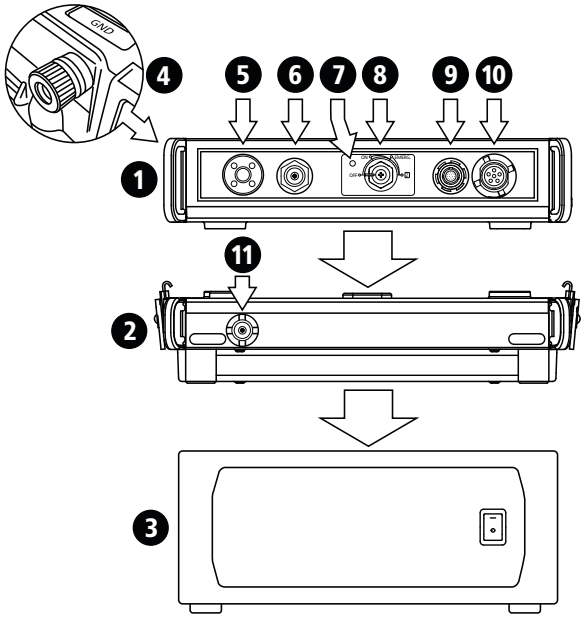

1	PRC-4090 Transceiver (P/N 4090-00-01)
2	PRC-4090 System Docking Station (P/N 4090-05-00)
3	PRC-4022 Power Supply (P/N 4090-06-01)
4	Earth stud
5	Whip antenna connection
6	50 Ohm antenna connection
7	LED status indicator
8	On/Off, Emergency and Zeroise switch
9	PRC-4090 Control Handset connector
10	H250 Handset connector
11	RF Connector (from 50 Ohm output)

Base Station Configuration (rear)

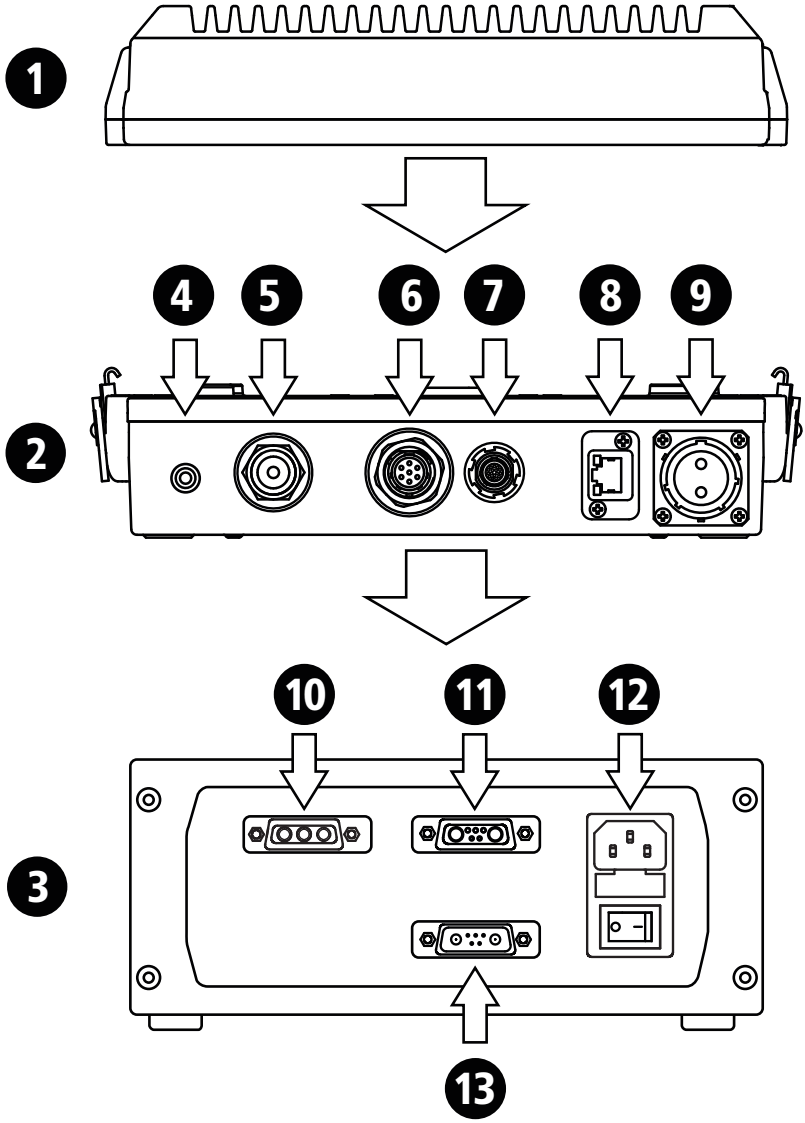

1	PRC-4090 Transceiver (P/N 4090-00-01)
2	PRC-4090 System Docking Station (P/N 4090-05-00)
3	PRC-4022 Power Supply (P/N 4090-06-01)
4	Ground
5	Coaxial connection (RF out)
6	ATU
7	Aux. PRC-4090 Control Handset connector
8	Ethernet connection
9	DC in (+11 V to +28 V DC)
10	DC out (24 V DC)
11	Auxiliary out (13.8 V DC)
12	AC in (100-240 V AC)
13	Battery backup (13.8 V DC)

Control Handset (Front)

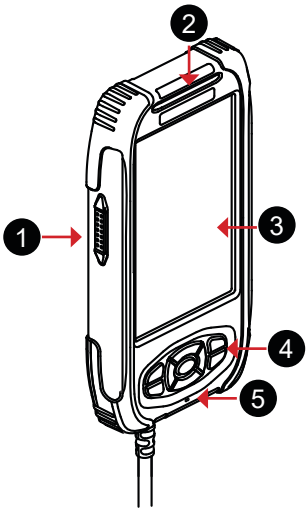

1	PTT button
2	Handset Speaker
3	LCD Display
4	Keypad
5	Microphone

Control Handset (Rear)

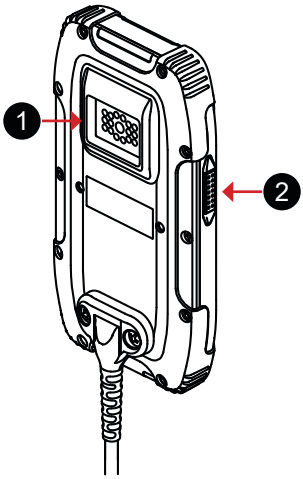

1	Hot-shoe connection to cradle and USB interface unit
2	PTT Button

Cradle and Handset Docking Station (rear)

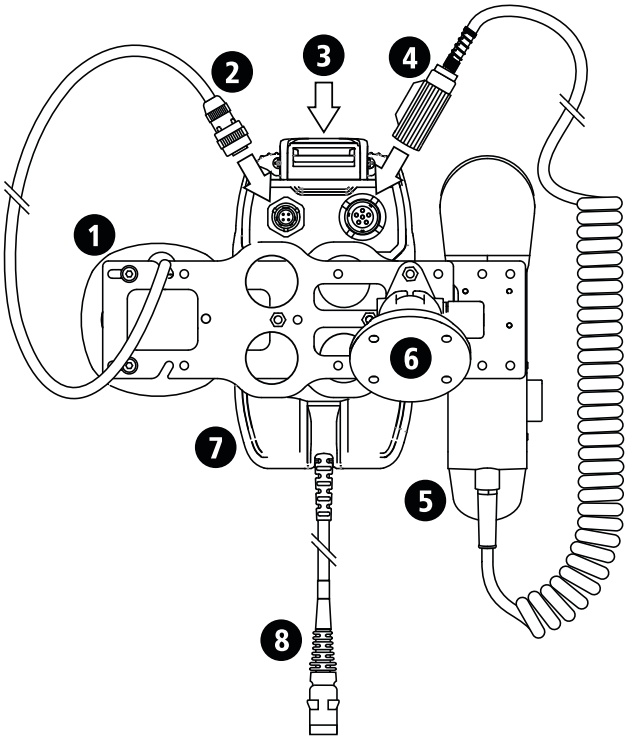

1	External speaker (3W, 8 Ohm)
2	External Speaker connection
3	USB connection for WiFi adaptor or programming
4	H-250 handset connection
5	H-250 Handset
6	Control Handset Docking Station (P/N 4090-05-03)
7	Control Handset (P/N 4090-01-09)
8	Connection to PRC-4090 Transceiver

Auxiliary Cables

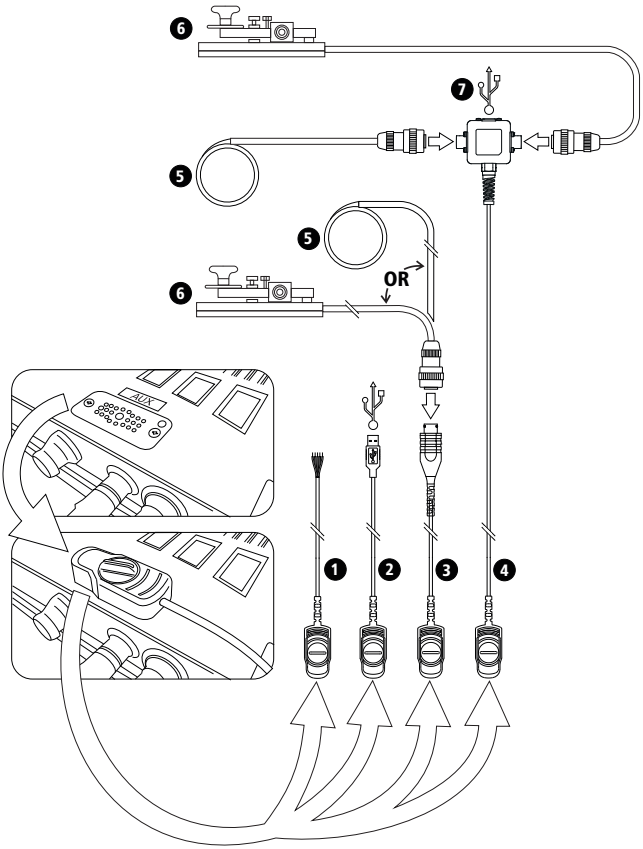

1	Hotshoe cable (unterminated) (P/N 4090-01-34)
2	Hotshoe adapter cable to USB male (P/N 4090-01-32)
3	Hotshoe adapter cable to GPS or CW key (P/N 4090-01-31)
4	3 port accessory hub (P/N 4090-01-39)
5	GPS adaptor (P/N 2090-01-24)
6	CW Key (P/N 2090-01-07)
7	USB connection

BASIC OPERATION 2

This chapter contains the following sections:

- Starting the Transceiver
- Display
- Antenna Type
- Channel Selection
- Receiving and Transmitting -Voice Call
- Making an Emergency Call

Starting the Transceiver

Ensure the transceiver is attached to a power source appropriate for your situation.

Turn the switch from the off position to the on position.

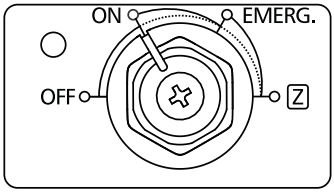

Reverse the procedure to power off.

LED status:

Power on: Constant green

Emergency call: Flashing green (rapid flashing green when transmitting)

Zeroise: Flashing red, then solid when complete

Lift and turn the switch to initiate an emergency broadcast (page 27) or to zeroise the transceiver (see page 108).

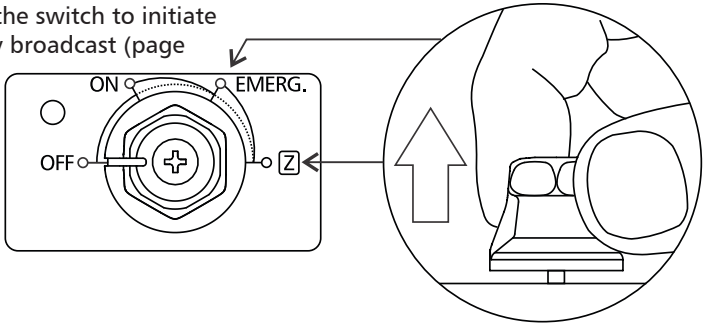

Keypad

There are seven keys on the keypad. Some keys have multiple functions assigned to them depending on when or how long the key is pressed.

Key	Function
▲	Channel Up / Scroll up
▼	Channel Down / Scroll down
◀ ▶	Scroll left and right
ENT	Enter / Set a menu item

Key	Function
CALL	Make a call
BACK	Clear / Back one step
+	Volume Up
−	Volume Down

Display

1	Tune Status	10	Modulation Mode
2	Date and Time	11	Receive/transmit status
3	ALE Status	12	Receive Strength/Transmit Power Indicator
4	Digital Voice/Secure Digital Voice	13	Swipe Menu Access
5	Status Indicators (see page 20)	14	Channel Label
6	Operation icons (see page 20)	15	Channel Frequency
7	ALE (Channel) Status	16	Channel Number
8	Selcall Network	17	ALE 3G Sync status
9	Transmit Power		

Status Indicators

Access Point

GPS

WiFi Client

USB Storage

Low Voltage

Missed Call

Screen Lock

Ethernet

Busy

Networked Serial

Battery charge

A number on the WiFi Client icon or the Networked Serial icon indicates the number of connections currently made to that device.

Operation Icons

Toggles Digital Voice or Secure Digital Voice encoding on or off (if fitted).

Cycles through low, med, high or no noise reduction.

Opens the channel select menu.

Toggles mute on/off. See page 88 for further mute details.

Manually tunes the antenna.

Enables/disables scanning.

Enables/disables Frequency Hopping (if fitted).

Swipe Menu

To access this menu, either swipe horizontally across the screen from the left edge to drag open the swipe menu or press and hold the right arrow key. The icons (other than Settings) appear green when enabled and white if disabled.

Accessing the Swipe Menu

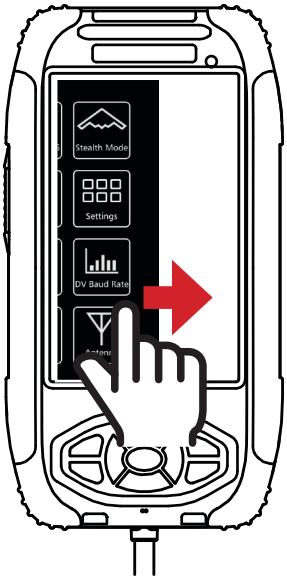

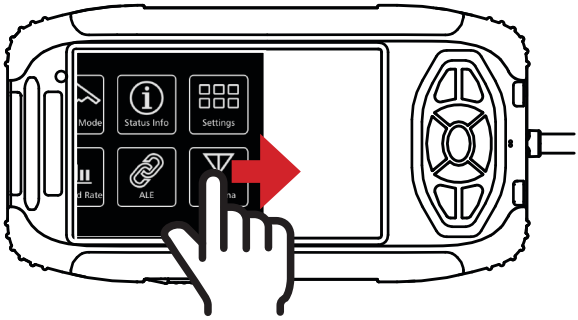

Swipe Menu

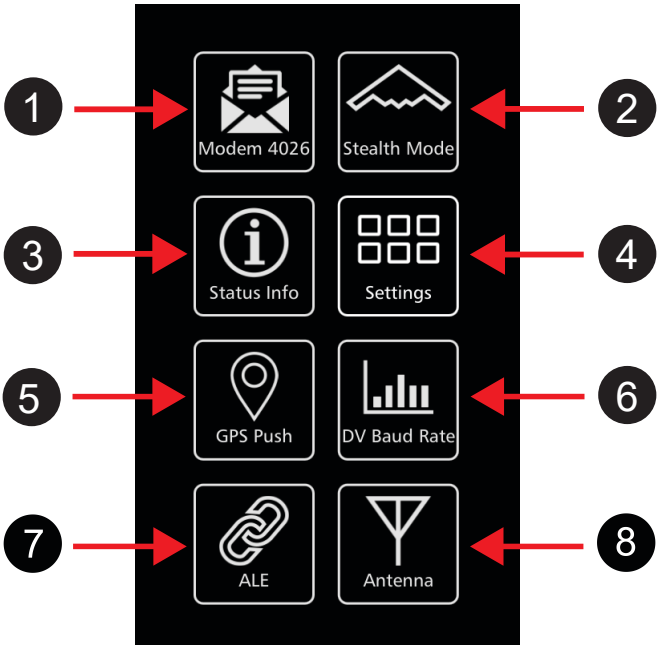

1	Modem Select - Tap to enable internal modem for data use (if fitted)
2	Stealth Mode - When active, all lights and sounds are disabled
3	Status Information - Displays IDs and mechanical information
4	Settings Menu - Access to Settings menus
5	GPS Push (if fitted) or Display Settings
6	DV Baud Rate - Quick access to Digital Voice Baud Rate settings
7	ALE Menu - Quick access to ALE menu
8	Antenna Select - Quick access to antenna select menu

The items displayed in the Swipe menu are determined by the options installed in the transceiver. Each of the Modem, Stealth Mode and GPS Push icons will turn green when active.

Status Info

The Status Info menu displays important information about the transceiver and the network.

It can be accessed from the Swipe Menu.

It displays the following:

Power: Receive and transmit voltage use, transceiver internal temperature and current draw.

Battery: If in Manpack Configuration, this line will display the time until battery needs to be charged, or if charging, the time until battery is fully charged as well as the charging current.

GPS Position: The current GPS position of the transceiver (if acquired).

IP Address: The IP address of the transceiver (if connected to an IP network).

Selcall ID: The primary four and six digit selcall IDs of the transceiver.

ALE 2G Self ID: The Self ID of the transceiver in an ALE 2G network (optional)

ALE 3G Self ID: The Self ID of the transceiver in an ALE 3G network (optional)

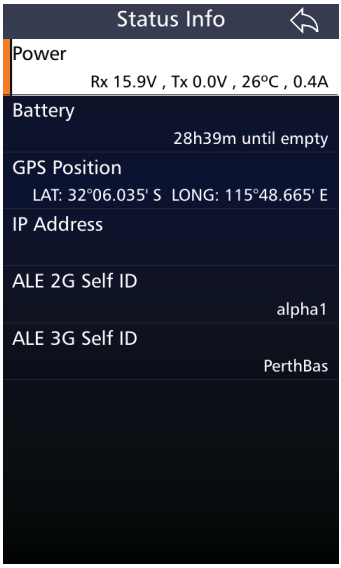

When charging battery:

When not charging battery:

Antenna Type

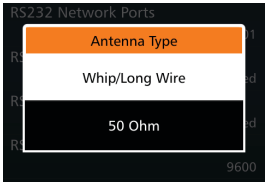

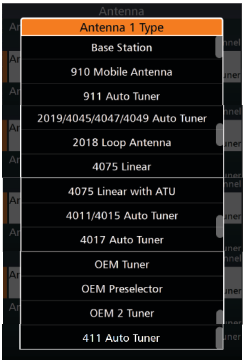

Before making a call, an antenna type needs to be selected from the Antenna icon in the swipe menu.

If the transceiver is being used with a PRC-4090 battery pack, the menu will show only 50 Ohm and Whip/ Longwire.

Tap **Antenna 1 Type** from the IO screen to display the Antenna 1 Type screen.

To reveal more items, either swipe down on the touch screen or press ▼.

Select an antenna type from the following:

Antenna Type	Select when...
Base Station	Base station antennas such as the Barrett 912 series are used. No tuning signals are emitted on channel change.
910 Mobile Ant	Using a Barrett 910 automatic tuning mobile antenna
911 Auto Tuner	Using a Barrett 911 automatic tuner
2019/4045/4047/4049 Auto Tuner	Using a Barrett 2019/4045/4047/4049 automatic tuning mobile HF antenna
2018 Loop Ant	Using the 2018 Mobile magnetic loop HF antenna
4075 Linear	Using the transceiver with a Barrett 4075 series linear amplifier.
4075 Linear with ATU	Using the transceiver with a Barrett 4075 series linear amplifier with ATU.
4011/4015 Auto Tuner	Using a Barrett 4011/4015 automatic tuner
4017 Auto Tuner	Using a Barrett 4017 automatic tuner
OEM Tuner	3040 tuner compatible (non-Barrett product)
OEM 2 Tuner	F2265 tuner compatible (non-Barrett product)
OEM Preselector	Using a non-Barrett Preselector
411 Auto Tuner	Using a 411 Automatic HF Tuning Unit

Selecting a Channel

There are two ways to select a channel on the Barrett PRC-4090 HF SDR Transceiver.

1. From the home screen, press the up (A) or down (B) keys on the keypad. This will allow a user to cycle though the programmed channels.

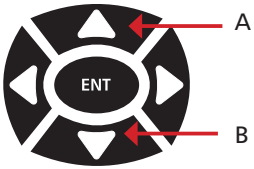

Portrait mode

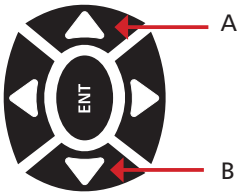

Landscape mode

2. From the transceiver home screen, press the channels button. This brings up the Channel Selection menu and shows all of the channels programmed into the transceiver in one place. Tap a channel to select it.

Channels

Holding down this channel button opens the Channel information screen which displays all of the settings for the channel currently selected.

If there are no channels programmed into the transceiver, turn to page 66 for instructions on channel programming.

Alternately, to search for a specific channel, tap and type in the number of the channel as programmed in the transceiver eg. typing 4 will select channel 4.

Making a Voice Call

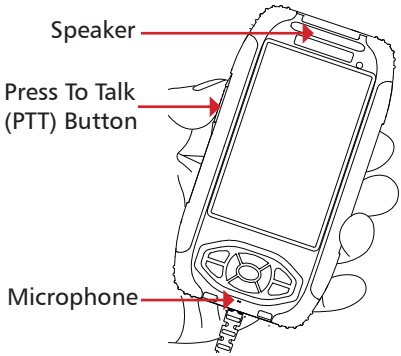

When Using the Microphone:

1. Press and hold the PTT (transmit) button only while talking
2. Position the microphone close to your mouth
3. Speak clearly
4. Use the word "over" to indicate that you have finished speaking, and then release the PTT (transmit) button.

Notes:

- *The Barrett PRC-4090 has a transmit time-out facility. This facility (when programmed) allows the transmitter to be keyed in transmit mode with the PTT (transmit) switch for a set time period, after which the transceiver switches to receive until the PTT (transmit button) is released and re-keyed. This facility prevents the transmitter transmitting for long periods of time if, for example, the microphone becomes jammed between seats in a vehicle causing the PTT (transmit) switch to be held down. Enabling, disabling and changing the time of the transmit timeout facility can be set either when programming the transceiver or in the RF Section of the Settings menu. See page 94.*
- *The microphone up / down buttons can be configured for channel change or volume control functions either when programming the transceiver or in the General Section of the Settings menu. See page 62.*

Making an Emergency Call

Note: Emergency Channels must be programmed using the Barrett PRC-4090 HF SDR Programming Software (P/N 4090-01-30).

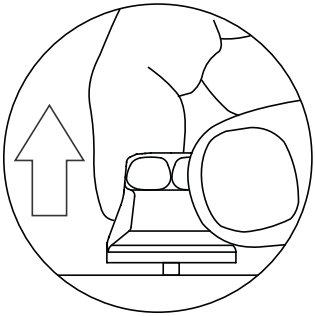

All Selcall emergency calls are transmitted by simultaneously pulling and twisting the on/off switch to the Emerg. Setting and releasing the switch. Emergency transmission will begin immediately. The LED indicator will flash slowly before transmission starts and become solid green upon transmit.

An emergency call can also be initiated by pressing and holding the CALL and BACK keys simultaneously.

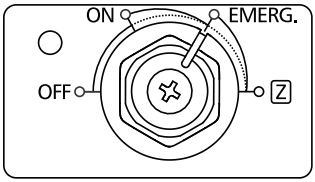

If the Emergency call is not enabled on the transceiver, an error message will appear and the emergency call will not be sent.

The action of the emergency call depends on how the transceiver has been programmed. For example:

- Selective Call that transmits and automatically changes to a selection of channels.
  Transmits the emergency Selcall sequence on each of the maximum of 20 channels programmed as emergency channels. There is a pause between calls allowing the operator to listen for an acknowledgment coming back. After the Emergency call is attempted on all the preprogrammed emergency channels the transceiver will go back into scan mode (if scanning is available) or stay on the last channel selected before the Emergency call was initiated.

  If a GPS receiver is fitted and enabled, the GPS position is also sent with the call.

  Note: After the emergency call has been sent, there is no indication that a call has been sent for security purposes.

- Royal Flying Doctor Service (RFDS) alarm

  Two-tone alarm 880 Hz + 1320 Hz continuous (Australian use only) – alerts the Royal Flying Doctor Service on RFDS channels.

  1. Select a channel with RFDS as the Selcall format.

2. Simultaneously pull and twist the on/off switch to Emerg. and release the switch.

   The RFDS alarm will continue transmitting for ten seconds.

   To cancel the RFDS alarm, press the **PTT** button or the BACK button.

Receiving an Emergency Call

On receipt of an emergency Selcall, a distinctive audio alarm is emitted and the following message displayed.

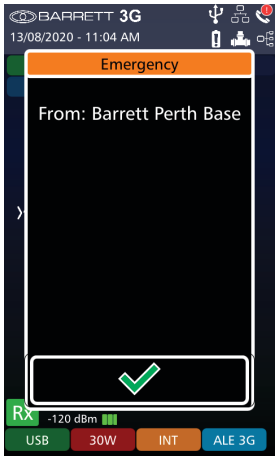

If the transceiver sending the emergency Selcall is fitted with a GPS receiver, the position will also be displayed.

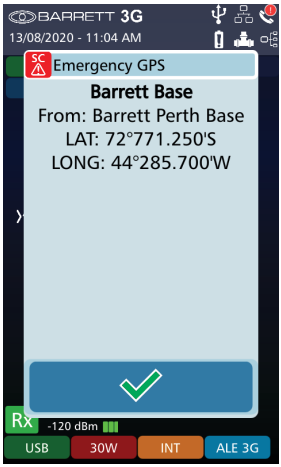

SELCALL 3

This chapter contains the following sections:

- Overview
- Important Selective Calling Information
- Summary of Calling Systems
- Setting up a Self ID
- Setting up Contacts
- Making a Selcall
- Advanced Selcall

Overview

This chapter covers all types of Selcall available on the Barrett PRC-4090 transceiver. All of these options are not available in all countries and may need to be purchased separately.

Selcall or Selective calling is a type of digital signal for HF networks. It utilises a type of squelch protocol where the transmission begins with a brief sequence of audio tones.

There are several different types of Selective Calling Systems available in addition to simple point-to-point HF communications.

The calling systems available for the transceiver are listed below:

- International (INT) - A four and six digit Selective Call system, fully interoperable with the UN format published in September 2004 and fully backwards compatible with all previous Barrett four and six digit Selcall protocols.
- OEM - A four and six digit Selective Call system compatible with other major HF manufacturers including those using encryption. Includes Selcall, Telcall, Beacon Call, Emergency call, Pagecall and GPS call.
- CCIR - A four digit Selective Call system as specified by CCIR-493.
- RFDS - Royal Flying Doctor Service (Australia Only)
- ARINC - Aeronautical Radio INC.

Important Selective Calling Information

Selcall Self IDs

The PRC-4090 transceiver can hold up to 14 different Selcall Self IDs assigned to it. These Selcall IDs can be any combination of four or six digit OEM or INT type ID.

Selcall Decode

The transceiver has the ability to decode both OEM and International Selcalls on any channel programmed as a Selcall channel. However, the call must be addressed to the relevant ID (OEM or INT).

Calls for each format type will only be decoded if there is at least one Self ID of that format programmed into the transceiver Self ID group.

Selcall Transmit

Selcall formats in transmit are channel specific. For example, only call types programmed for the channel are permitted. This means International format calls can only be sent on channels that are programmed as International Selcall channels. OEM calls can only be sent on channels that are programmed as OEM Selcall channels

Special Notes for the OEM Selective Call Protocol

- Six digit OEM calls will only be decoded by other Barrett transceivers fitted with the OEM Selcall protocol or other manufacturer's transceivers that use DES56 encryption. This does not require an export permit.
- Four digit OEM calls will be decoded by Barrett 950 and 2050 transceivers using the International Selcall (four and six digit) and other manufacturer's transceivers with similar CCIR-493 based Selective Call systems.
- Four and six digit GPS and Status data calls use the OEM privacy key to encrypt the data. If this eight digit key has not been programmed by the programming software, a default privacy key of 99999999 is automatically used for transmission.
- Four and Six digit Page calls also use the privacy key but unlike the other calls, the user has the option to manually enable or disable the privacy key. When disabled, the data is sent as plain text.
- Emergency GPS calls are automatically sent as plain text (four and six digit).

Summary of Calling Systems

Call Type	International	OEM
Emergency Call	Yes	Yes
Beacon Call	Yes	Yes
Selcall	Yes	Yes
Telcall	Yes	Yes
ARINC Call	Yes	Yes
Page Call (SMS)	Yes	Yes
GPS Call (Data & Request)	Yes	Yes
Secure Call	Yes	No
Status Request Call	Yes	Yes

The three most commonly used calls are Beacon Call, Selcall and Telcall. The other calls are more advanced and can be found in the Advanced Selcall Functions section of this chapter on page 47.

Selective Call - Beacon Call

Beacon Call allows the Operator to determine the signal quality between their station and the station they want to call on a particular channel, but without actually alerting the station they are doing so.

Selective Call - Selcall

Selcall is a signalling system based on standard CCIR-493 for use on HF networks. Each station in a HF network can be assigned up to 14 Self IDs of which there can be a mixture of four and six digit IDs. The station can be called using any of these self IDs.

It functions as a hailing or alert system i.e. a HF transceiver (Station A) can send a Selcall to another transceiver (Station B). This will alert the operator at Station B that Station A is contacting them.

Selective Call - Telcall

Telcall uses this Selective Call system to transport a telephone number from a station on a HF network to a base station equipped with a telephone interconnect unit to initiate phone calls onto the international telephone network.

Note: For Selcall and Telcall functions to operate, the channels being used must be enabled for Selcall operation.

Setting up a Self ID

1. From the Settings menu, tap the Selcall icon.

2. Tap Default Int Selcall ID (4 digits). This will set up a 4 digit ID.

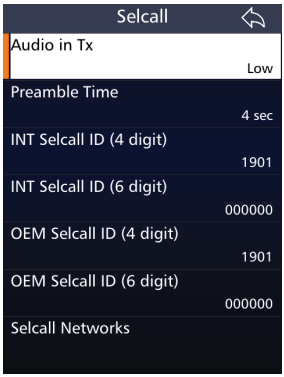

3. Type in a four digit number. This will either be provided to you by your network provider or an original ID may be able to be used if it does not conflict with another ID on the network.

The procedure is the same for the Default Int Selcall ID (6 digits), OEM Selcall ID (4 digits) and OEM Selcall ID (6 digits).

Note: Having both a four digit and the six digit ID is not required, either would still allow successful operation. It is recommended that the four digit or six digit INT and OEM IDs be the same for easy self identification.

A list of all of a transceiver's current IDs can be found under Selcall Networks in the Selcall menu.

This shows all the current Selcall IDs for a transceiver and the networks that they are attached to, see page 56.

Setting up Contacts

1. From the Settings menu, tap the Contacts icon.

2. To add a new contact tap the + button on the left of screen.

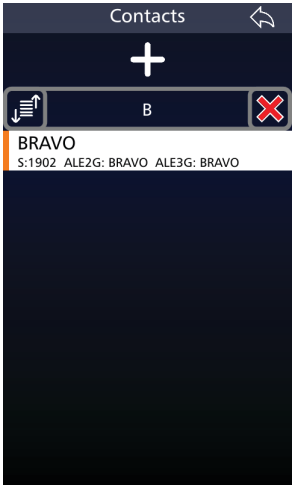

The following menu will open:

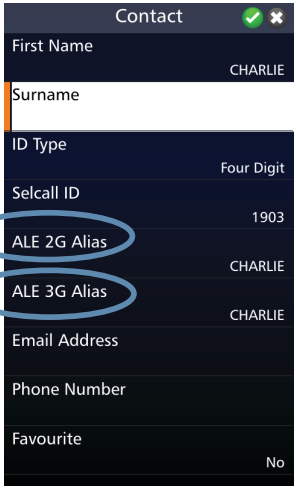

Will not be described in this manual. See ALE 2G and ALE 3G User Guide (P/N BCM40524)

From this menu, enter a name for this contact. Both first name and last name do not have to be completed.

ID type, refers to the type of ID the transceiver you are inputting has, whether it be 4 digit, 6 digit or ARINC. Select which is appropriate and enter the Selcall ID.

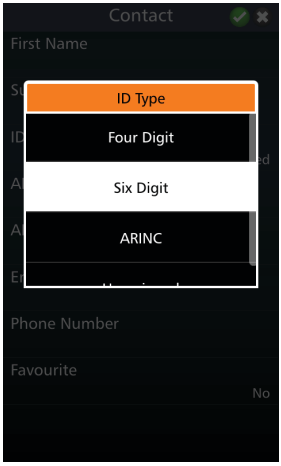

An email address and phone number can also be entered. Once again these do not have to be entered for basic functionality of the transceiver.

To favourite this contact, select yes under Favourite.

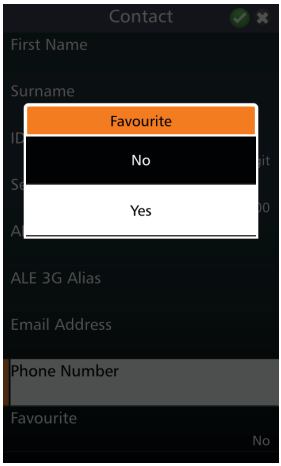

3. To save the contact,tap the in the top right hand corner of the screen and select yes.

Additional Contact Information

Searching Contacts

The contacts list can be sorted alphabetically by first name using the icon shown on the right, located on the left hand side of the Contacts screen.

Either tap ← or press ENT or CALL to display the results of the search.

The icon on the left of the search bar clears the search and the icon on the right performs the search again.

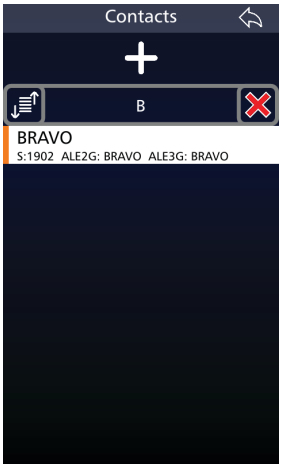

Editing Contacts

To edit contact details, select the desired contact by using the ▲ and ▼ keys and either tap the contact or press ENT from the keypad

The Edit Contact screen displays. Select and change the desired settings.

Deleting Contacts

From either the Settings<Contacts screen or the Call<Contacts screen, tap and hold a contact to trigger the Delete Contact screen. To delete the contact, select Yes, or select No to cancel the operation.

Making a Selcall

Before making a Selcall, ensure the transceiver is not scanning channels and select a Selcall channel. For more information regarding channel selection and basic voice calls, see on page 17.

Use the CALL key to access the Manual Call screen.

From this menu, Selcalls, Contacts, Favourites and Call History can be accessed.

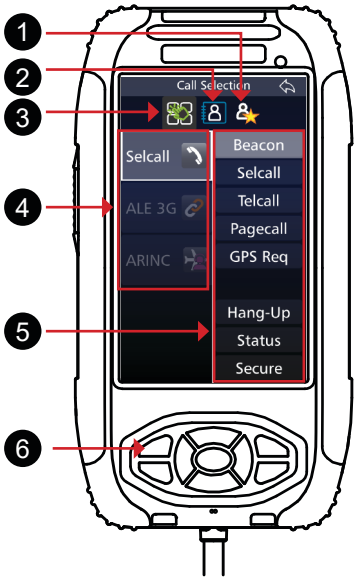

1. Contacts - Favourites
2. Contacts
3. Call Type Selection Menu
4. Call Type
5. Call Sub-types
6. Call Key

Beacon Call

Beacon Call allows the operator to determine the signal quality between their station and the station they want to call on a particular channel, but without actually alerting the station they are doing so.

When a Beacon Call is sent to another station, and if the channel being used is open, the remote station sends back a distinctive four-tone revertive signal. The operator can judge the quality of the channel for communications purposes by the strength and clarity of this distinctive tone. Using Beacon Calls on several available channels will determine which channel is best to use for subsequent Selcalls or Telcalls.

Note: both stations must be programmed for Selcall or Telcall operation.

Sending a Beacon Call

1. Listen for traffic on your selected channel. If traffic is heard, select another channel and try again.
2. Press CALL and, if necessary, press the icon to show the Call Selection screen.
3. Either:
   - Select Beacon Call, enter a Selcall Id manually and press Enter, or
   - Choose a contact from the Contacts icon and then select Beacon Call.
4. Wait for the Beacon Call to be sent and listen for the distinctive four-tone revertive signal from the station you have called.

- If a revertive tone is not heard, or is difficult to hear, try another channel and repeat the process until the revertive tone is clear.

Receiving a Beacon Call

When a transceiver receives a beacon request call, it responds by transmitting the Beacon Call revertive tones. No indications occur on the transceiver. Beacon Calls are not saved in the Selcall History.

Selcall

Sending a Selcall

1. Select the channel to send the Selcall on (Beacon Call can be used to determine the best channel)
2. Listen for traffic on that channel. If traffic is not heard, continue.
3. Press CALL and, if necessary, press the icon to show the Call Selection screen.
4. Either:
   - Select Selcall, enter a Selcall Id manually and press Enter, or
   - Choose a contact from the Contacts icon and then select Selcall.
5. Wait for the Selcall to be sent and listen for the revertive signal that indicates the call was successful.
   - If a revertive tone is not heard or was difficult to hear, try another channel and repeat the process until a good channel is found.
   - If a revertive tone is heard but you receive no verbal response from the station, it may be because the Operator is unavailable at the time.

Receiving a Selcall

Note: To receive a Selcall your transceiver must be programmed for Selective Call (Selcall) and where multiple channels are in use the scan function should be activated.

When you receive a Selcall, your station sends a revertive tone (to alert the calling station that its call was received), an audible alarm sounds, the mute (squelch) (if selected) opens and the display shows who the call is from.

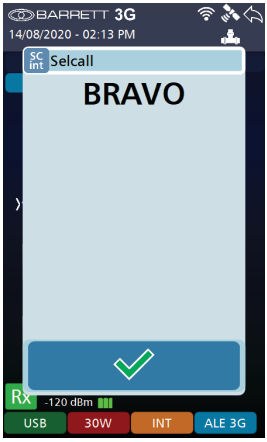

The audible alarm will sound for 60 seconds unless acknowledged and then time out. To cancel the alarm and acknowledge the call, press the PTT button or tap ✓. If the audible alarm times out, the missed call icon displays and a periodic audio reminder is emitted.

For details of previously received Selcalls, press and hold CALL to display the Advanced Call History screen. Refer to the Advanced Call History section on page 43.

Telcall

Telcall uses the digital Selective Call system to send a telephone number on an HF network. Telcalls are primarily used to send to stations equipped with a telephone interconnect unit to initiate phone calls onto the PSTN.

Note: For Selcall and Telcall functions to operate the channel must be enabled for Selcall operation.

Sending a Telcall

1. Select the channel to send the Telcall on. This will be the channel provided by your network administrator to contact the interconnect.
2. Press CALL and, if necessary, press the icon to show the Call Selection screen.
3. Either:
   - Select Telcall, enter the selcall ID of the interconnect, select Enter phone number, enter the phone number manually and press Enter, or
   - Choose a contact from the Contacts icon and then select Telcall. Enter the Selcall ID of the Interchange, choose Select from Contact and select contact.
4. Wait for the call to be sent and listen for the revertive signal that indicates the call was successful.
   - If a revertive tone is not heard try another channel and repeat the process.
   - If the destination station is connected to a telephone interconnect, when the call is successful, wait for the telephone connection to be made and then proceed with the call.
5. Perform a Hangup Call to disconnect from the interconnect (refer to page 55 for more information on Hangup Calls).

Receiving a Telcall

Note: To receive a Telcall your transceiver must be programmed with a Self ID and where multiple channels are in use the scan function should be activated.

When you receive a Telcall, your station sends a revertive call (to alert the calling station that its call was received), an audible alarm sounds, the mute (squelch) (if selected) opens and the Telcall screen displays.

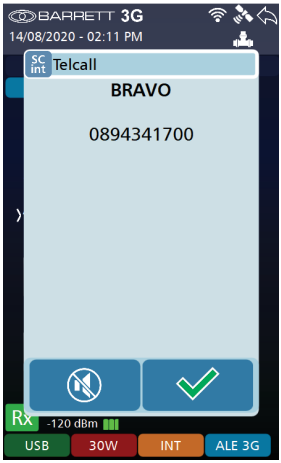

The Telcall screen shows the Selcall ID and telephone number of the caller.

Tap to stop the audible alarm but maintain the Telcall screen.

Tap To close the Telcall screen.

The audible alarm will sound for 60 seconds, unless acknowledged and then time out. To cancel the alarm and acknowledge the call, press the PTT button or tap either or (described above). When the audible alarm times out, the call received icon displays and a periodic audio reminder is emitted.

For details of previously received Telcalls, press and hold CALL to display the Advanced Call History screen.

Advanced Call History

Advanced Call History is a log of all Selcall, ALE 2G and ALE 3G call types stored in the transceiver handset. The log has the time of transmission, frequency and IDs of the transmitting and receiving transceivers recorded with every entry. Advanced Call History also has a 'return call' feature that directly links the call history with the transceivers call functionality whilst pre-entering the information from the selected call entry.

The Call History is also directly connected to the transceiver's contact settings, allowing calls from the same contact to be collated together - regardless of call type. This can be toggled on or off in the Call History menu.

Call History Menu

The Call History menu can be accessed via **Settings** < **Call History**.

From this menu, the Advanced Call History can be accessed, deleted, updated and the collation of the call history by contact can be toggled on or off. Update advanced call history will only appear when using a remote control application (see IP Connectivity Guide P/N BCMPRC-40907).

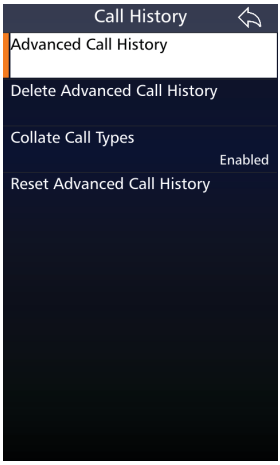

Enabling the Collate call types function will group calls from the same contact together - regardless of call type (Sellcall, ALE 2G or ALE 3G) - based on the contacts entered into the transceiver via either the programming software or the transceiver handset (see page 34 for further details on creating contacts).

Disabling the Collate call types function will collect calls in threads based on the call type (Selcall, ALE 2G or ALE 3G) and sender regardless of whether they are entered as a contact.

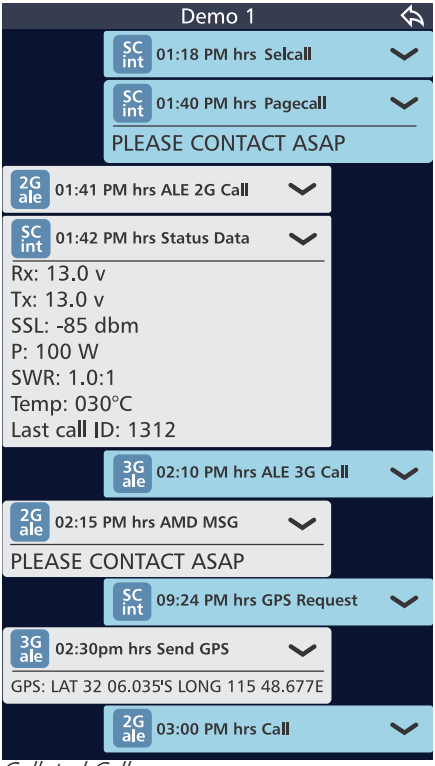

Collated Calls

Pressing an arrow reveals further information about a call including frequency, channel number, as well as to and from addresses.

Uncollated Calls

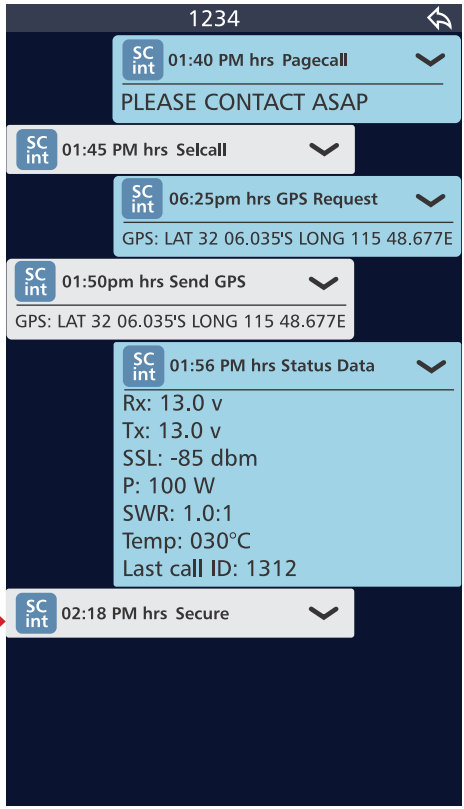

Pressing a call bubble within a thread will initiate the return call process to the sender.

Please note that this function is unavailable for ALE 2G and 3G NetCalls.

Advanced Call History Menu

This menu can be accessed by either pressing and holding the **Call button for 2 seconds** or via the **Settings < Call History Menu**. Both display the same features and have the same functionality.

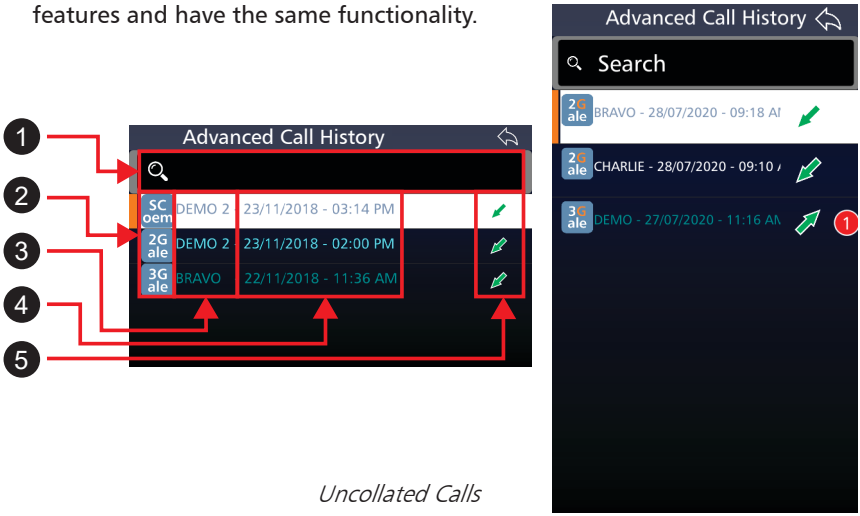

Uncollated Calls

1	Search	The Search function allows an operator to search the following fields: first name, surname, phone number or email address of a contact; Selcall ID, ALE 2G or ALE 3G alias; date or time of call or data type call (GPS, status, pagecall).
2	Call Type	The call types are outlined in the table below.
3	ID or Alias	This is the ID, address or Alias of the remote transceiver that the local transceiver is/was communicating with.
4	Date and time	The date and time of the most recent call in a thread are displayed here.
5	Incoming or Outgoing call	The arrows display whether the last call in the message thread was a transmitted, received or missed call.

Icon	Description
	Call transmitted
	Call Received
	Missed Call
5	Missed Call count
	Call sent and delivered at other station * For 2G and 3G only
	Call sent but not delivered at receiving station *for 2G and 3G only. The red cross indicates non-delivery as a default state until a call sent acknowledgment is received.

Icon	Description
SC int	Selcall INT format
SC oem	Selcall OEM format
SC CCIR	Selcall CCIR format
SC RFDS	Selcall RFDS format
SC ⚠	Emergency Selcall format
2G ale	ALE 2G format
3G ale	ALE 3G format

Advanced Selcall Functions

The Selcalls and settings in this section are less commonly used than those previous but are useful in all manner of situations.

Selcall Settings

From the Settings menu, select Selcall to view the Selcall Settings for the transceiver.

The following menu displays:

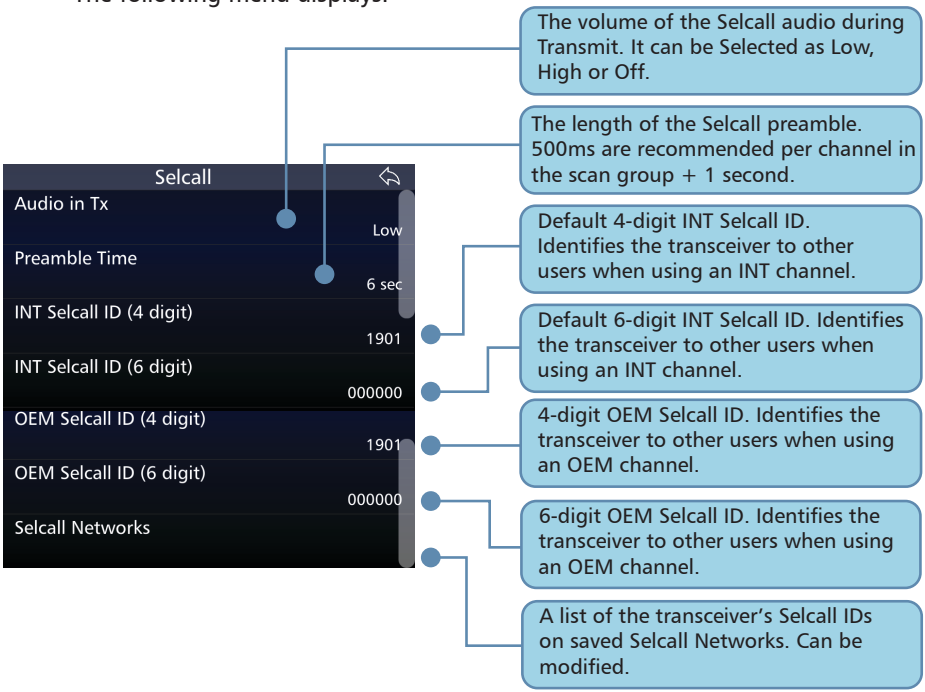

Pagecall

Pagecall (SMS) allows messages of up to 32 characters in INT format, or 64 characters in OEM format to be sent to or received from other transceivers with Pagecall facilities.

Sending a Pagecall

1. Select the channel on which to send the Pagecall (Beacon Call can be used to determine the best channel)
2. Listen for traffic on that channel. If traffic is not heard, continue.
3. Press CALL and, if necessary, press the icon to show the Call Selection screen.
4. Either:
   - Select Pagecall, enter the selcall ID of the transceiver you wish to contact, type in the message and press Enter, or
   - Choose a contact from the Contacts icon and then select Pagecall. Type in the message and press Enter.
5. Wait for the call to be sent and listen for the revertive signal that indicates the call was successful.
   - If a revertive tone is not heard try another channel and repeat the process.

Receive a Pagecall

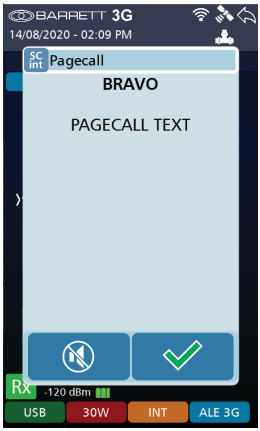

When a Pagecall is received, an audible alarm sounds, any mute is disabled and the Pagecall screen displays

The Pagecall screen shows the Selcall ID and message.

Tap to stop the audible alarm but maintain the Pagecall screen.

Tap To close the Pagecall screen.

The audible alarm will sound for 60 seconds and then time out. To cancel the alarm before the time out period, and to acknowledge the call press the PTT button or tap either or (described above). When the audible alarm times out, the call received icon displays and a periodic audio reminder is emitted.

When the audible alarm times out, the call received icon displays.

This message can be retrieved from the Advanced call history menu (see page 45).

GPS Request

Use this option to request a remote station's GPS position. Information from the remote station will be either the latest GPS position of the station or 1 of 2 error messages:

- "GPS Unresponsive" - where data is not being received or invalid data is received from the GPS unit connected to the remote station.
- "GPS Not fitted at Remote Station" - where the remote station does not have a GPS unit connected to it.

Sending a GPS Req

1. Select the channel on which to send the GPS Req (Beacon Call can be used to determine the best channel)
2. Listen for traffic on that channel. If traffic is not heard, continue.
3. Press CALL
4. Either:
   - Select GPS Req, enter the selcall ID of transceiver you wish to contact and press Enter, or
   - Choose a contact from the Contacts icon and then select GPS Req.

5. Wait for the call to be sent and listen for the revertive signal that indicates the call was successful.

   - If a revertive tone is not heard try another channel and repeat the process.

6. The receiving station will transmit it's position if fitted with a GPS receiver.

   The GPS Data screen displays the caller's Selcall Alias (or alternately, their Selcall ID)

   To stop the alarm sounding but keep the display, press . To close the screen, press .

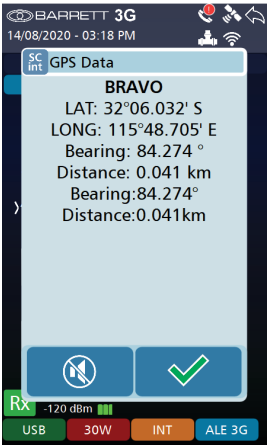

GPS Position

Use this option to send your GPS position to another station.

A GPS receiver must be connected and receiving position information when using the GPS call option.

Sending a GPS Pos

1. Select the channel on which to send the GPS Pos (Beacon Call can be used to determine the best channel)
2. Listen for traffic on that channel. If traffic is not heard, continue.
3. Press CALL
4. Either:
   - Select GPS Pos, enter the selcall ID of transceiver you wish to contact and press Enter, or
   - Choose a contact from the Contacts icon and then select GPS Pos.
5. Wait for the call to be sent and listen for the revertive signal that indicates the call was successful.
   - If a revertive tone is not heard try another channel and repeat the process.

Note: If the display indicates that the GPS is unavailable, you cannot select the Selective Call function GPS Pos.

Status Call

A Status call allows the operational status parameters of any Barrett transceiver fitted with Selcall to be accessed. This status is sent from the remote transceiver as a Selcall with the status information embedded within the Selcall structure. Information retrieved for remote diagnosis of transceiver performance includes:

- Selcall ID
- Receive state battery voltage
- Last transmit state battery voltage
- Signal strength indication of received status request Selcall
- Forward power output level
- VSWR of the antenna
- Temperature
- Selcall ID of the last radio called.

Sending a Status Call

1. Select the channel to send the Status Call on (Beacon Call can be used to determine the best channel)
2. Listen for traffic on that channel. If traffic is not heard, continue.
3. Press CALL
4. Either:
   - Select Status, enter the selcall ID of transceiver you wish to contact and press Enter, or
   - Choose a contact from the Contacts icon and then select Status.
5. Wait for the call to be sent and for the remote station to return its status data.

If a reply is not received, either repeat the process or change the channel and repeat.

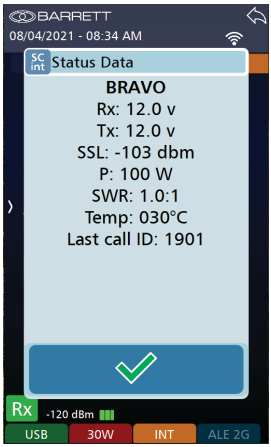

Secure Call

The Secure Call option provides the transceiver operator with a secure speech path using an in-band hopping technique. Secure Call is simple to use requiring each radio to be setup with the same four digit “Selcall Secure Call Code”.

Features:

• The Secure Call is limited to point to point and point to multi point (group call) communications between radios within a network.

• If any radio drops out of the secure call, it is not possible to re-enter the secure call. Operators can re-establish the link following the Secure Call method.

Secure Call Codes

A Secure call code is necessary to make a successful secure call. Create a Secure Call Code via Settings, Security, Secure Call Code. Type a 4 digit number.

Note: The 4 digit secure call code must be the same for both the transmitting and receiving stations.

Settings → Security