Mounting the Barrett 4049 Automatic Tuning Mobile HF Antenna

The Barrett 4049 antenna should be mounted in positions similar to those illustrated in the diagrams on the following pages. Select a position free from excessive vibration. A bracket, fabricated to withstand the forces and vibration that can be expected during off-road driving, should be used to mount the antenna to the vehicle. When locating the mounting position for the antenna ensure that the antenna body, when flexing on its vibration mount, cannot come into contact with other parts of the vehicle. The antenna should be mounted as far from surrounding objects on the vehicle as possible.

The antenna is supplied standard with two sections (Barrett P/N: BCA201901), a tapered black spring (Barrett P/N: BCA201903), an antenna installation guide and a pre-terminated six metre control cable to suit the Barrett 4049 antenna to transceiver. A six metre (Barrett P/N: BCA201904) or ten metre (Barrett P/N: BCA201905) extension cable for the control cable is also available.

The control cable should be routed into either the engine compartment or boot (trunk) of the vehicle. If the joint between the antenna control cable and the extension cable is in an exposed position, a self-amalgamating/self-bonding tape should be used to seal the joint. Do not wrap this joint if it cannot be made completely water tight as water will collect in the joint and cause it to corrode.

A good ground (earth) to the main body of the vehicle is essential for efficient operation of the antenna. To achieve this, clean all joints to bare metal and use copper braid ground (earth) straps if any non-metallic joints are encountered.

After mounting the main body of the antenna, screw the black base spring onto the antenna body followed by the whip section.

Important Information

It is ESSENTIAL to maintain the minimum clearances between the antenna and surrounding metal work as indicated in the diagrams. FAILURE TO MAINTAIN THESE CLEARANCES WILL NOT ONLY REDUCE THE EFFICIENCY OF THE BARRETT 4049 AUTOMATIC TUNING MOBILE HF ANTENNA BUT MAY ALSO LEAD TO INTERNAL RF ARCING AND FAILURE.

Important:

Considerations on the overall height of the 4049 antenna once fitted should also be considered.

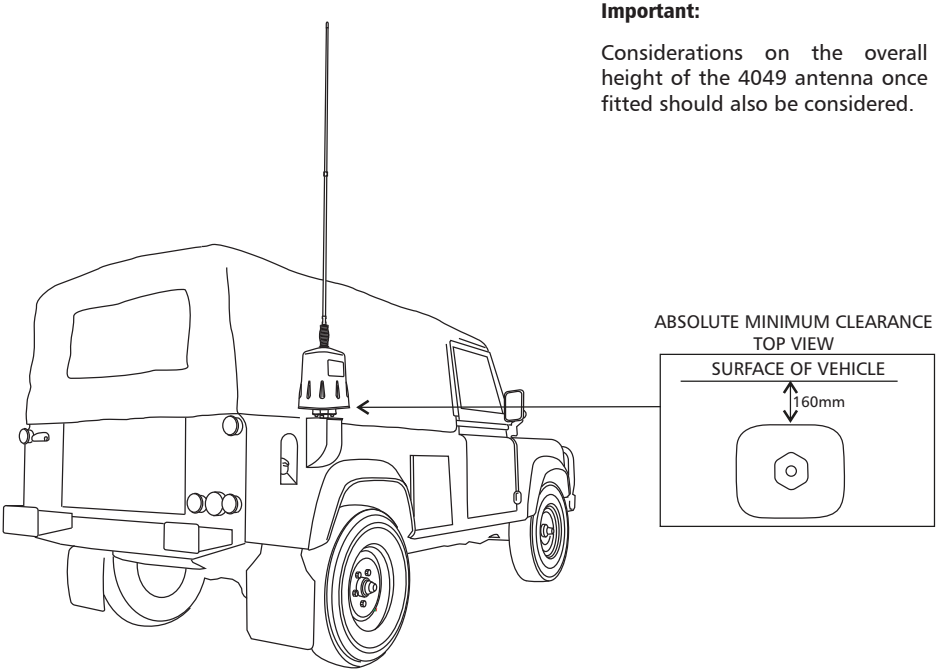

Important:

Please note that the mounting of a 4049 antenna on the front of a vehicle may be considered illegal in some areas / countries. Please check with your local transport / vehicle authority prior to installation on the front of your vehicle.

Considerations on the overall height of the 4049 antenna once fitted should also be considered.

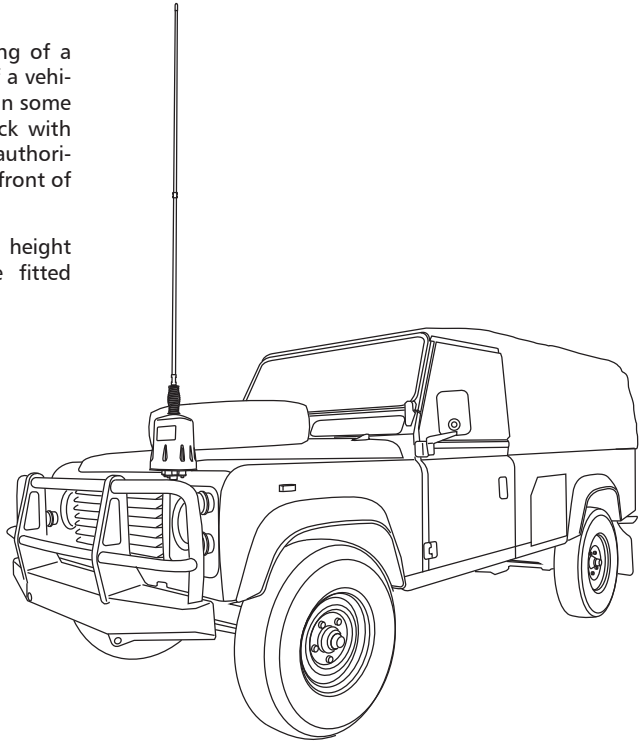

Caution:- Whilst the 4049 automatic tuning mobile HF antenna is designed to withstand vibration to military specifications on tyred vehicles, some mounting positions on large prime-movers, particularly front mounted bull bars, are subject to vibration that far exceeds this specification. Do not mount the 4049 antenna in positions such as these as damage to the antenna may result.

Grounding (Earthing) the Antenna

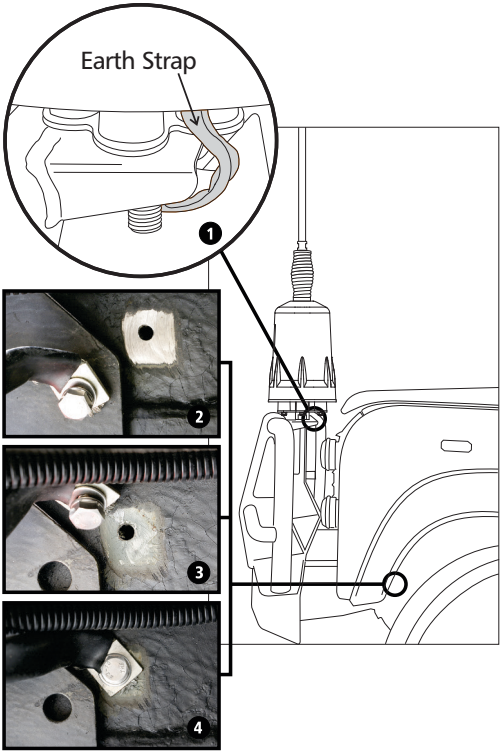

Notes:

1. Connect an ground (earth) strap to the base of the antenna
2. Grind away any paint or coating at the grounding (earthing) point on the chassis to expose the bare metal
3. Apply electrical contact grease to prevent rust and corrosion and maintain the integrity of the ground (earth) connection
4. Attach the ground (earth) strap lug securely with an appropriate fastener.

IMPORTANT: If the antenna is mounted in a high position on the rear door of a vehicle, multiple ground (earth) straps must be used to reach the vehicle chassis's grounding (earthing) point. Ground (earth) conductivity from the antenna to the chassis must be maintained for correct operation of the antenna.

Antenna Assembly

Mounting the Base Spring

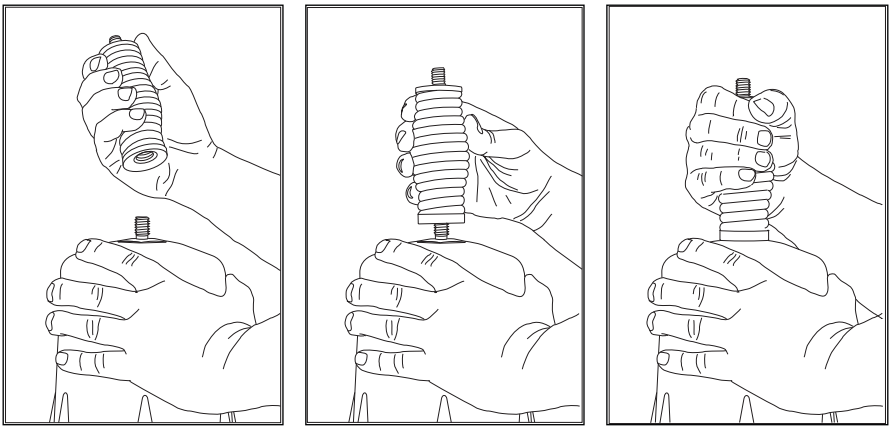

The base spring should only ever be hand tightened, if a tool is used it may damage the spring base.

Mounting the Whip Sections

To mount the whip section it is recommended that only one section of the whip is screwed onto the antenna at a time. The whip section should be hand tightened, then a suitable tool (i.e. a spanner) can be used to tighten the section a further 10 to 20 degrees clockwise while holding the antenna body with a free hand.

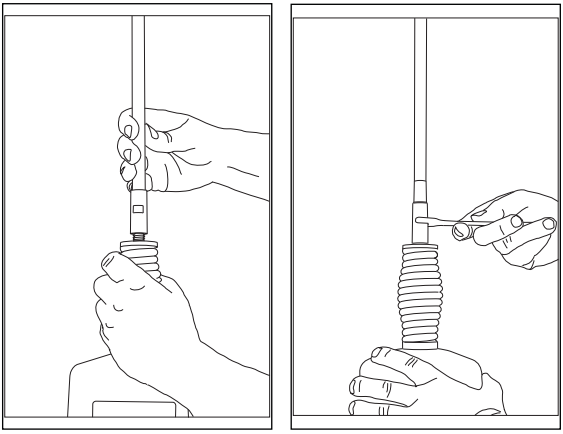

To mount two whip sections together, the unattached whip section should be hand tightened, then a suitable tool (i.e. a spanner) can be used to tighten the section a further 10 to 20 degrees clockwise while holding the already screwed on whip section with a free hand.

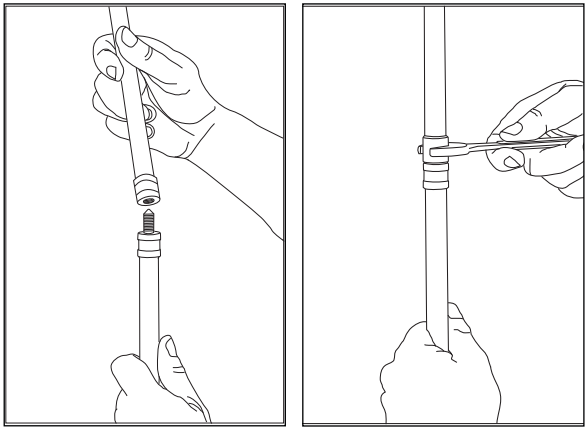

Testing the Barrett 4049 Automatic Tuning Mobile HF Antenna

To test the Barrett 4049 antenna, first select the lowest transmit frequency in the transceiver and tap **Tune**. The display should show the word “Tuning” for a few seconds, followed briefly by “Tune Passed” and an indication of the measured VSWR (Voltage Standing Wave Ratio) value. Check this reading against the VSWR meter.

Repeat the above test on the highest frequency in the transceiver and on a selection of frequencies at approximately 2 MHz intervals. If the tune passes every time, the Barrett 4049 antenna is working correctly. The Barrett 4049 antenna tunes to maximise whip current, not minimise VSWR, but the displayed VSWR value should generally be between 1.0:1 and 2.0:1. However, if the display shows “Autotune Fail” accompanied by low pitched beeps, the Barrett 4049 antenna has failed to tune. Confirm the “Antenna Type” is selected to “4049 Mobile Ant” in the transceiver Menu Settings < IO < Antenna Type setting (page 24). For possible causes check that all cables are properly connected, the earth cable from the base of the Barrett 4049 antenna has a good connection to the vehicle body (not chassis or battery), the whip fitted is not faulty or incorrect and move the vehicle if the Barrett 4049 antenna is close to any metal fences, buildings etc. If the problem cannot be resolved, contact your dealer or Barrett Service Department for advice.

NVIS Kit for 4049 antenna - P/N 2019-01-10

The Barrett Near Vertical Incidence Skywave (NVIS) antenna whip is designed to enhance the short range communications efficiency of the Barrett 4049 Automatic Tuning Mobile HF Antenna. The increased whip length combined with its horizontal orientation (once installed) provides a significantly higher take off angle and radiation efficiency. Communications paths over the range 20 - 500 kms, particularly in hilly and mountainous terrain, can be greatly improved through the use of the NVIS kit.

The NVIS kit comprises of a single flexible whip section of 4 metres in length which replaces the two section whip (2019-00-03) supplied with the Barrett 4049 Antenna. It has fittings at each end to attach to the 2019 antenna and the optional NVIS Kit Magnetic Mounting Base (2019-01-11). The whip can also be secured to the vehicle without the magnetic mounting base by using a custom made bracket with a 13mm hole (sourced by end user). This option may be preferable if the vehicle is fitted with a roof rack for example.

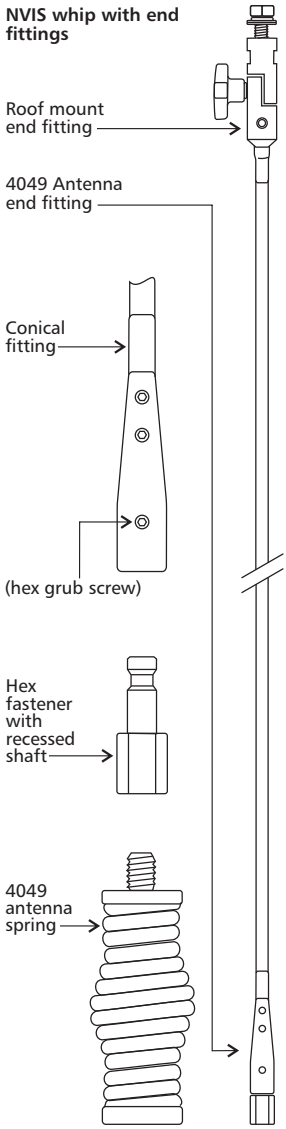

The NVIS kit can be installed as follows:

1. Remove the existing 4049 antenna whip, leaving the spring in place.
2. Unscrew the lowest hex grub screw on the 4049 antenna end of the whip so that the hex fastener with recessed shaft can be removed.
3. Tighten the hex fastener with recessed shaft onto the top threaded stud of the antenna spring with an appropriate tool.
4. Place the conical fitting over the recessed stud and tighten the hex grub screw enough so that the conical fitting can rotate but can not be separated from the recessed shaft. This will allow the conical fitting to rotate while the roof mount end is being attached and also prevent antenna end fitting damaging the vehicle by becoming detached while attaching the roof mount end.
5. Attach the roof mount end of the whip to an appropriate location (see figure 1 as a guide). It could be attached to the optional NVIS kit magnetic mounting base (see figure 3), optional NVIS kit gutter mount bracket (see figure 4) or to a custom fabricated bracket (with 13mm hole). If the magnetic mounting base is used the roof mount end must be locked into one of three angle positions by locating the pin on the surface of one side of the fitting into the hole on the surface of the other side of the fitting (see figure 2). Once the correct angle is achieved tighten the knob firmly by hand.
6. Once the roof mount end is securely in its final position, tighten the hex grub screw that was loosened in step 2.

Figure 1 Example of front and rear antenna mounting using optional Magnetic Mounting Base (P/N 2019-01-11).

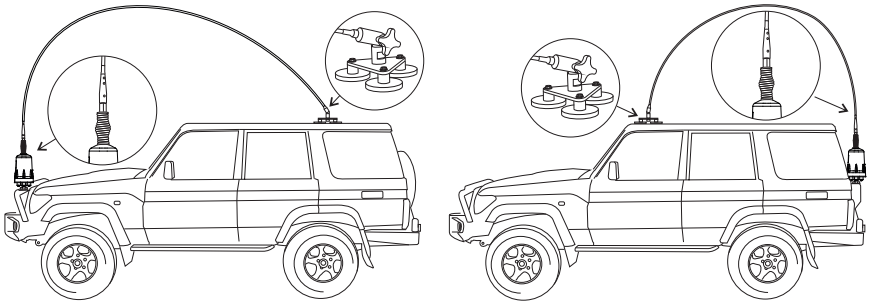

Figure 2 Adjustable roof mount fitting showing locating pin and locating holes.

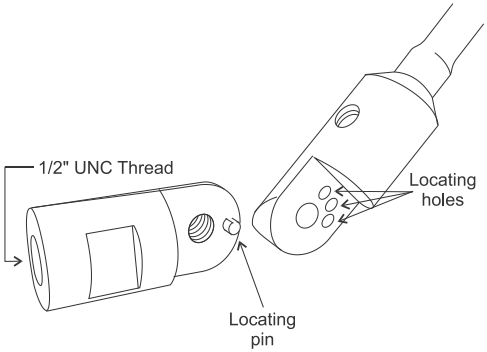

Figure 3 NVIS Kit Magnetic Mounting Base (optional) P/N 2019-01-11.

Base shown here with roof mount fitting attached.

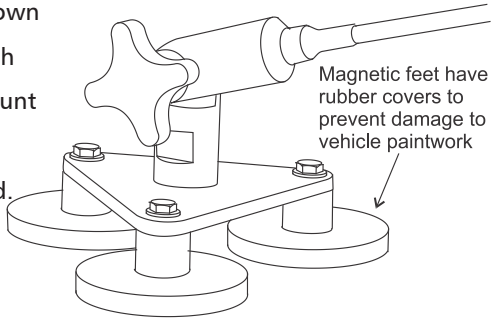

Figure 4 NVIS Kit Gutter Mount Bracket (optional) P/N 2019-01-12.

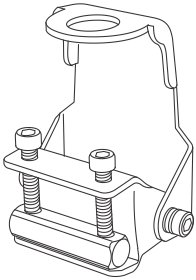

Base Station Installations

The PRC-4090 base station setup combines the PRC-4090 HF SDR Transceiver with the System Docking Station and the PRC-4022 AC Power supply. This setup can be combined with other Barrett products to provide a situation specific HF communications solution.

Assembly

1. Before starting, ensure that the lock clamps are released and in a horizontal position.
2. Place the SDS on top of the PRC-4022, ensuring that the four capstans are correctly aligned and drop into the keyway slots.

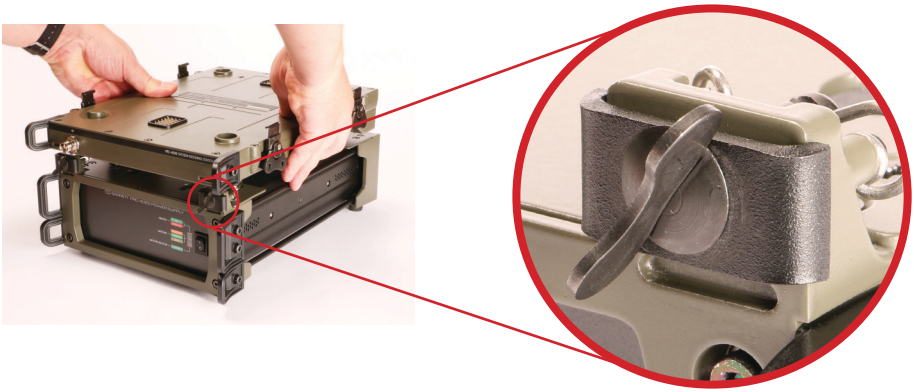

3. Push the SDS towards the rear of the power supply as shown below so that the capstans and SDS click into place.

4. To secure the SDS, first rotate the lock clamps back into a vertical position, then turn the fasteners a quarter turn. The locks should click into place.

5. With the side latches folded outwards, place the PRC-4090 transceiver on top of the SDS so that the locating feet meet their corresponding holes.

6. Fold the side latches back into position and turn the fasteners to secure.

Cooling Fan

The cooling fan is an optional extra which may be added to the PRC-4090 transceiver for situations where high volumes of data or Digital Voice transmissions may cause the transceiver's internal temperature to rise above 65°C.

The cooling fan requires no user input as it is temperature controlled by software, automatically activating when necessary.

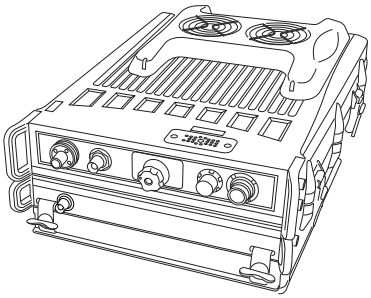

Installing the Cooling Fan

Attach the cooling fan to the transceiver by carefully aligning the connector pins located beneath the cooling fan with the socket on top of the transceiver as shown below.

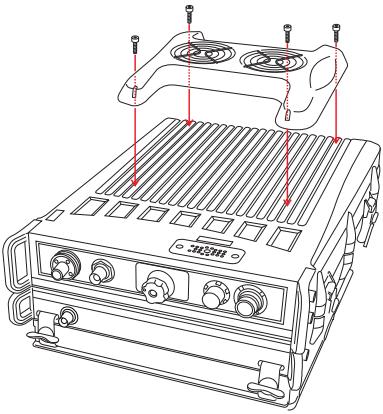

Four screws (located in the four corners of the cooling fan) are used to secure the cooling fan to the SDR.

To uninstall the cooling fan, reverse the installation procedure.

Connection Diagram

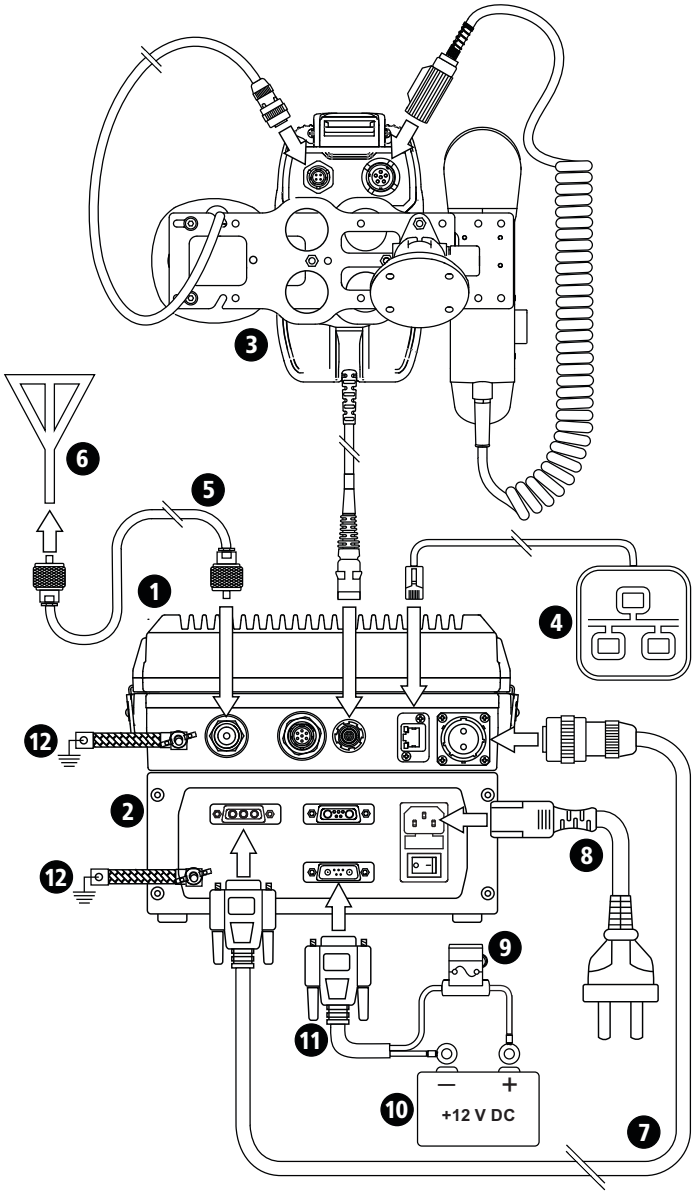

1	Barrett PRC-4090 HF SDR Transceiver (P/N 4090-00-01) and System Docking Station (P/N 4090-05-00)
2	PRC-4022 AC Power Supply (P/N 4090-06-01)
3	PRC-4090 Control Handset (P/N 4090-01-09) and Control Handset Docking Station (P/N 4090-05-03)
4	IP Network connection via RJ45 cable
5	Coaxial cable
6	Antenna
7	Power cable from Barrett PRC-4090 SDS to PRC-4022 Power Supply (P/N 4090-03-02)
8	IEC mains cord (P/N SA-00020)
9	In-line Fuse
10	12 V (or 24 V) DC Battery
11	3 metre battery back-up cable for PRC-4022 Power Supply (P/N 4090-06-08)
12	Ground (earth)

Site Selection Recommendations

The success of every HF Radio system is primarily measured by its ability to receive weak signals and to transmit RF power efficiently. A number of important factors need to be considered to achieve success. These include: frequency selection, time of day and ambient noise at the receiver site. Frequency and time of day are factors which can be used to calculate the maximum usable frequency (MUF) and lowest usable frequency (LUF) using prediction software freely available on the internet. A typical example of this is VOACAP, http://www.voacap.com/prediction.html

Site selection and system design go hand in hand and should be considered before any equipment is purchased. Forcing the radio system into an unsuitable site will undoubtedly result in disappointing if not unworkable performance of the system. Little can be done to improve an installed system if, for example, the ambient RF noise is unacceptably high.

It is recommended that site evaluation be done before any system designs are finalised to avoid system performance disappointment.

The following should be considered when choosing a position for the transceiver:

Operating Convenience

The transceiver should be placed so that the operator is comfortable and any required facilities are easily accessible.

Air Circulation

The PRC-4090 relies on air flow around cooling fins to dissipate heat generated by the transmitter. The mounting position must allow free air flow around these fins.

Proximity of Transceiver to Antenna

When using RG-58 coaxial cable from the transceiver to the antenna, a cable length of no more than 30 metres is recommended. Should a run of more than 30 metres be required, it is recommended that a low loss coax such as RG-213 or RG-8 be used.

It is recommended that the transceiver chassis is connected to ground (earth) using the post on the rear panel to stop pick-up of unwanted noise from local power supplies and electrical equipment.

Power Supply

When 24 V DC is supplied to the PRC-4090 transceiver, the PEP Voice output power will achieve 150 W. This is only available with the PRC-4090 System Docking Station.

Power output regulation is performed automatically based on the DC voltage presented to the transceiver DC input connector. The Barrett 4022 Power Supply is available in the BC402201 (24 V DC) version. This power supply version is capable of operation with AC mains input voltage between 88 and 256 V AC.

In base station installations where no mains supply is available, various Barrett solar power supply solutions are available depending on the system configuration requirement.

Note: Some installations use an AC battery charger to float charge the supply battery. Battery chargers can produce electrical noise from the rectifier diodes. This noise causes a static type of interference in the receiver. It may be necessary, therefore, to switch off the battery charger whilst the transceiver is in use. If float charging of batteries is required for installations with unreliable AC power supply, it is recommended that BC402201 be used as it provides a three stage charge facility to maintain a battery without the noise problem described above.

Voltage Drop

The average current consumption of the transceiver is low but during transmission of voice peaks, high current is needed for short intervals. This means that the power supply cable must be heavy enough to supply these short duration current peaks without excessive voltage drop. Preferably, only use the power cable supplied with the transceiver. If extra cable is required, use a cable with a conductor square area of no less than 8 mm^2. Unwanted voltage drop will also occur if incorrect wiring techniques such as poor choice of connection points and incorrect use of terminal lugs are used.

Protection Fuse

The transceiver is provided with adequate internal protection from over-current or short-circuit. The fitting of an additional external fuse is still considered necessary for both the protection of the transceiver and to ensure that in the event of damage to the cable, a fire does not occur. The fuse used must be installed in the active wire as close as possible to the battery, and must be of a type which has a low voltage drop at the peak currents expected.

Note: In-line 3AG glass fuses are not suitable. An ATC automotive blade type fuse rated at 25 A with a suitable high current ATC fuse holder rated at 30 A or more should be used. These type of fuses and holders are contained in our standard installation kit (P/N BCA40004) or are available individually (P/N BCA20021).

Antennas

The antenna is a most critical part of the complete transceiver installation. It must accept the output power from the transmitter, radiate that power with minimum loss and in the receive mode, accept weak signals for input to the receiver.

Incorrect antenna installations will yield poor system performance and are often the cause of complaints of poor transceiver performance.

A range of antennas is available from Barrett to suit most small fixed stations. Detailed instructions are included with each antenna.

912 Multi wire Broadband Dipoles

(P/N BC91200, BC91202 and BC91203)

Barrett 912 broadband dipoles are ideal for base stations that require operation on multiple frequencies throughout the HF spectrum using a single antenna.

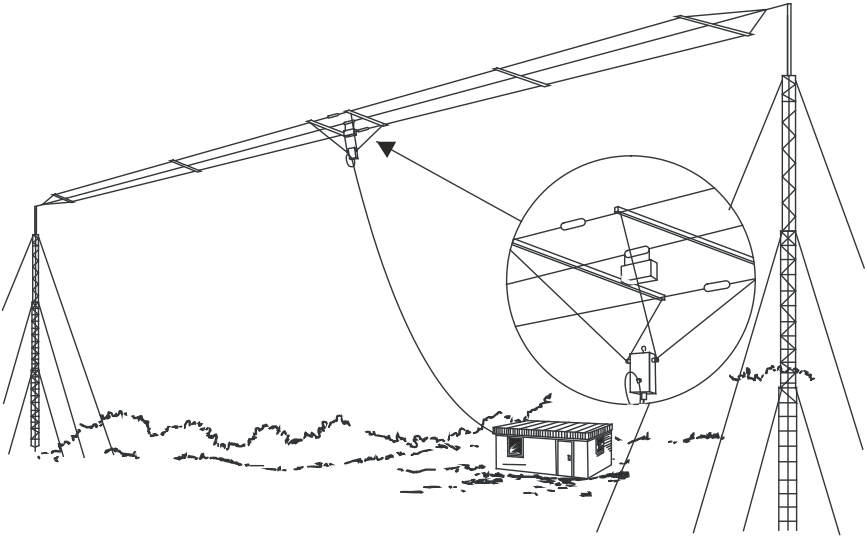

The Barrett 912 antenna can be mounted either in a horizontal or inverted 'V' configuration as illustrated in the following diagrams. In the horizontal configuration, the major radiation direction is broadside to the antenna. When mounted in the inverted 'V' configuration, the antenna becomes fairly omni-directional. In the horizontal configuration, the minimum distance between the masts is 32 metres and the recommended mast height is 15 metres. In the inverted 'V' configuration the recommended mast height is 15 metres and at this height the 2 metre stub masts are each installed at a minimum of 19 metres from the mast base. In this configuration the mast must have an offset or out-rigger bracket, at least 0.8 metres long, to hold the antenna away from the mast. Support towers may be either lattice masts as illustrated, tubular telomasts or other support structures that may be available locally. It is recommended that the halyards used to support the antenna be either UV stabilised Dacron cord or wire rope and that pulleys should be of stainless steel construction.

Install the antenna as illustrated in the diagrams, in the inverted 'V' configuration the eye on the top of the balun is used to attach the support halyard. In the horizontal configuration the balun hangs below the antenna.

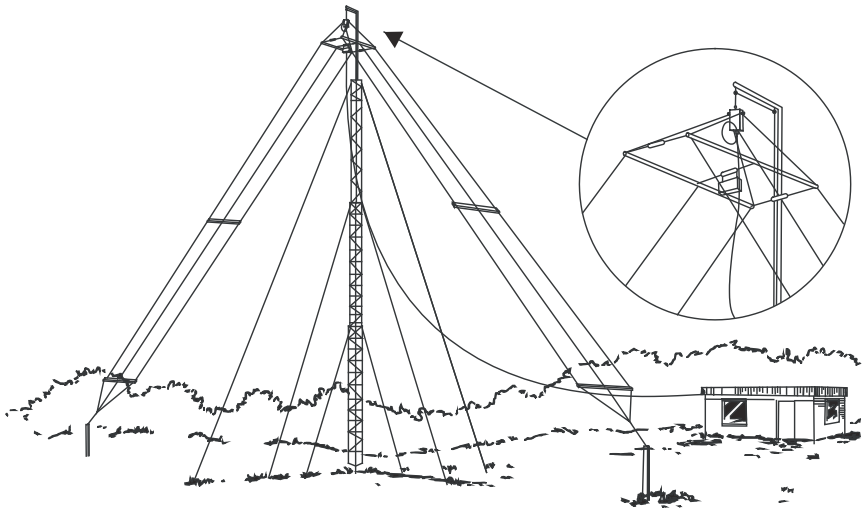

As with all antenna installations ensure the antenna is as far from sources of electrical interference as possible and in a position that makes it impossible for the antenna to come in contact with high voltage overhead mains wiring.

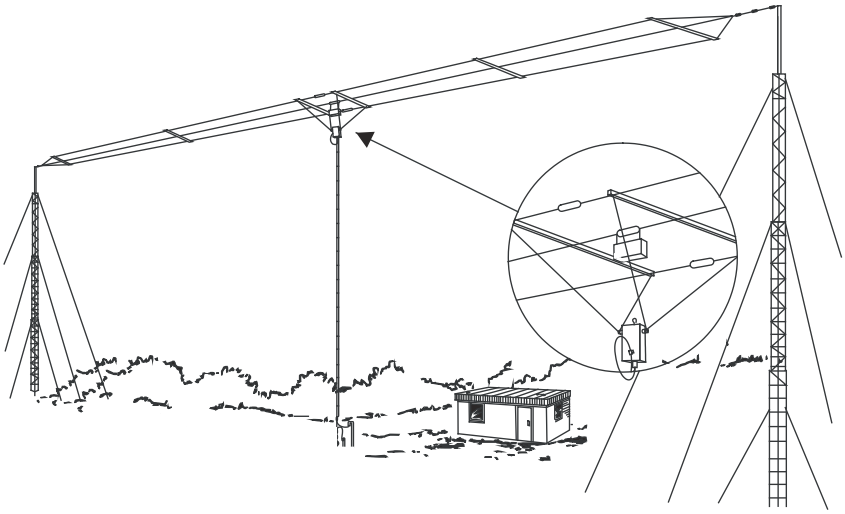

912 Multi-wire broadband dipole antenna - 1Kw (27M/54M) (P/N BC91203/BC91207)

4047 Automatic Tuning Horizontal Dipole Antenna

The Barrett 4047 Automatic Tuning Horizontal Dipole Antenna is designed for conditions where area is limited but a high performance base station antenna is still required. It consists of composite radiation elements driven by an automatic antenna tuner to allow operation from 3 to 30 MHz. The tuner provides broadband impedance matching during scan mode (receive) operation, for reliable link establishment using modern radio protocols.

The antenna is designed for operation on a 6 to 10 metre standard 50 mm mast making it simple to install. With a packed length of 2.1 metres the antenna can be easily transported by air.

Assembly fixtures are supplied to assist in mounting the antenna to an existing mast, tower or pole. Alternatively, a range of suitable masts can be supplied with the antenna.

The tuner has a memory system that stores tuning information for each channel after an initial tune sequence with unlimited capacity.

For further information regarding the 4047 Automatic Tuning Horizontal Dipole Antenna, please consult the 4047 Automatic Tuning Horizontal Dipole Antenna User Manual (P/N BCM404700).

Connection Details for a PRC-4090 Transceiver and 4047 Automatic Tuning Horizontal Dipole Antenna

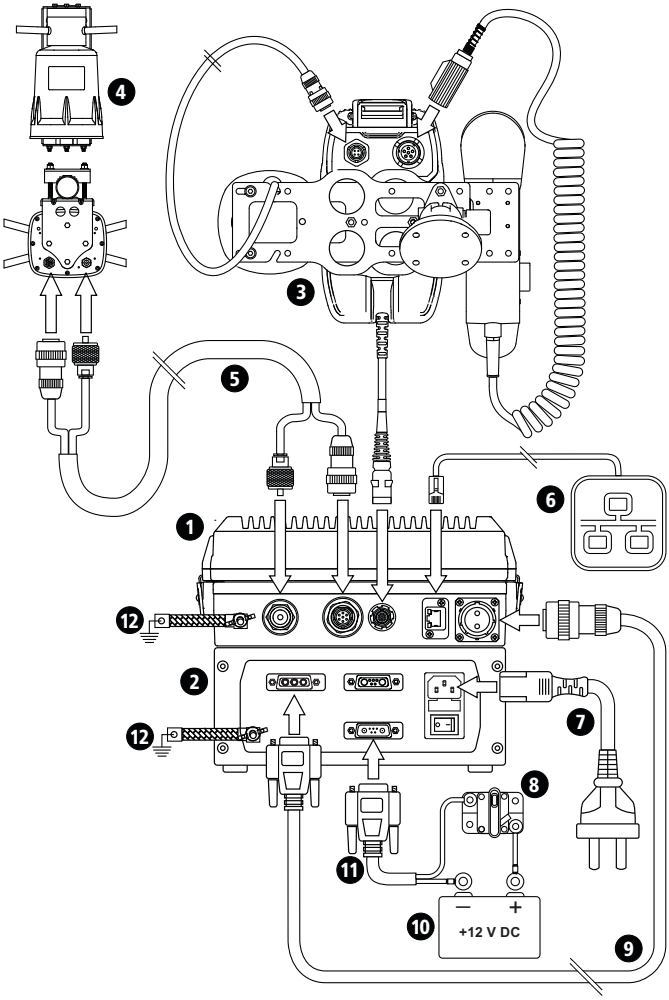

1	Barrett PRC-4090 HF SDR Transceiver (P/N 4090-00-01) and System Docking Station (P/N 4090-05-00)
2	PRC-4022 AC Power Supply (P/N 4090-06-01)

3	PRC-4090 Control Handset (P/N 4090-01-09) and Control Handset Docking Station (P/N 4090-05-03)
4	4047 Tactical HF ATU base antenna (P/N 4047-00-01)
5	Coaxial / Control Cable (P/N 4017-01-01)
6	IP Network via RJ45 cable
7	IEC Mains cable (P/N SA-00020)
8	Circuit breaker
9	Power cable from Barrett PRC-4090 SDS to PRC-4022 Power Supply (P/N 4090-03-02)
10	12 V (or 24 V) DC Battery
11	3 metre battery back-up cable for PRC-4022 Power Supply (P/N 4090-06-08)
12	Ground (Earth)

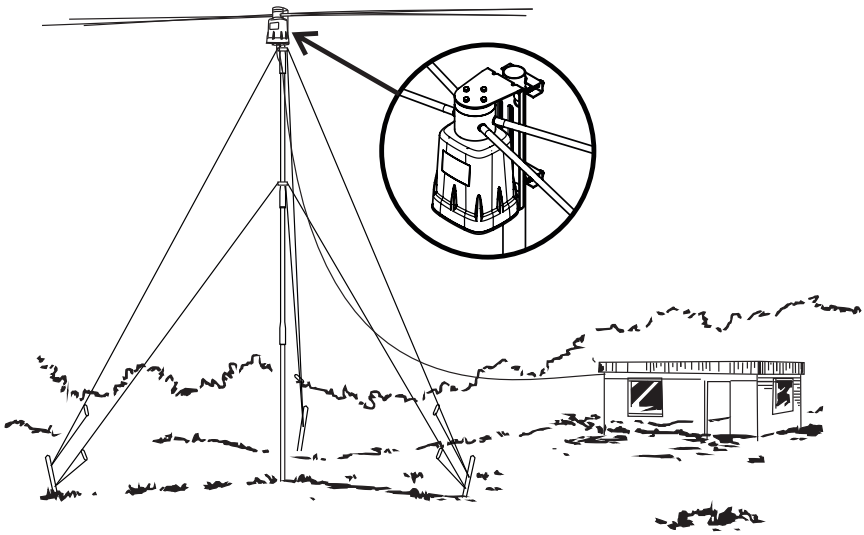

4045 Automatic Antenna Tuner for Base Station Installations

Antennas such as long-wires, vertical whips and loop configurations require an Antenna Tuning Unit to operate correctly.

Housed in a fully weatherproof enclosure, the 4045 will tune long wire antennas effectively up to a length of 10 metres and wire loop antennas or whip antennas over a frequency range of 2 to 30 MHz. Tuning is rapid, typically less than one second the first time RF is applied, either whilst the operator is talking or when the "Tune" control is activated on the transceiver (see page 107).

The 4045 tuner features a memory facility that stores the configuration required to tune to a frequency. On any subsequent use of that frequency, the 4045 reconfigures to the stored settings in typically less than 130 milliseconds. Following initial tuning, the antenna's VSWR is monitored. If any significant variation occurs, the 4045 will re-tune the antenna automatically.

The 4045 is supplied complete with coaxial / control cable having an overall length of 30 metres (P/N 4017-01-01). The cable is a composite design incorporating coaxial, power supply and control cables.

Antenna

The following points should be considered when mounting an antenna with the 4045:

- The antenna should be mounted as far away as possible from buildings, trees, vegetation and sources of electrical interference. If metallic masts or supports are used, arrange insulators to ensure the antenna is spaced at least two metres from the mast.
- The radiating part of the antenna starts at the tuner. The base of the antenna should be centrally located as per above criteria.
- High voltages are present on the antenna system. The antenna tuner and antenna should be located or protected so that there is no possibility of accidental contact or danger of RF burns.

Transceiver and Tuner Mounting

The transceiver should be mounted in a suitable position allowing easy operator access. The antenna tuner should be mounted, preferably out of the weather, and as close to the ground (earth) point as possible. The interconnect cable supplied with the antenna tuner should be routed, away from other cables, back to the transceiver and connected as indicated in the diagram. The maximum interconnect cable should be less than 25 metres.

Ground (Earth) System

The ground (earth) system is a key part of the overall antenna system and consequently the system operation. An inadequate ground (earth) system is the primary cause of poor performance and tuning problems. Unless a good ground (earth) system (counterpoise) can be provided, there is little point in installing the antenna. In areas of good ground (earth) conductivity (i.e. the terrain is always damp), an effective ground (earth) can be made through a grounding (earthing) rod. This should be a minimum 1.5 metres in length and should be installed as close to the tuner as possible. A suitable grounding (earthing) can be purchased from Barrett Communications (P/N BCA90056). Several rods bonded together will improve the ground (earth) contact. In some cases metal water pipes may be used as a ground (earth) providing:

- The water pipe is close to the tuner and the water pipe enters the ground close to the tuner.
- There are no joints or couplings in the pipe that will increase the resistance path to ground.
- The water pipe enters soil with good conductivity.
- A low resistance joint is made with the water pipe.

Frequently the ground (earth) conductivity will not be sufficient to provide a satisfactory ground (earth) for the Barrett 4045 tuner. This will almost certainly be the case in well drained sandy soils or on rock. In these cases, a counterpoise must be used as a ground (earth) system. This will also be the case in rooftop installations where no existing ground plate (such as metal roofing) exists.

The number of radials required for an effective counterpoise depends on the soil quality, dampness and other factors which affect the conductivity of the soil. The more radials used, the better will be the performance of the antenna/ATU combination especially at lower frequencies. This manual suggests a minimum of 20 radials, but optimum performance at low frequencies is not guaranteed.

The radials of the counterpoise need only be of much thinner cable i.e. 5.48mm^2 (#1 #2 SWG) preferably copper wire. RG58 Coaxial cable may be used. At the base of the antenna, the radials all couple together at a common well bonded antenna ground (earth) point. The radials should be buried into the ground to a minimum of 200 mm depth.

Note: To accomplish reliable ATU tunes at frequencies below 5 MHz, it is not uncommon, with poor conductive soil conditions, to require up to 120 radials each of up to 70 m length, requiring thousands of metres of cable and a lot of trenching. This is impractical and is the reason we do NOT recommend Whip/ATU antenna for land based systems.

Post-Installation Performance Check

After mechanical installation is complete, select the highest frequency to be used on the transceiver. A directional watt-meter may be inserted in the coaxial transmission line between the transceiver and the tuner, although the internal metering of the Barrett PRC-4090 Transceiver is accurate. The tune mode on the transceiver is then energised. Upon application of RF energy, the tuner should start to tune, indicated by the 'clattering' of the tuner relays. After a few seconds the relay noise will cease, the transceiver should indicate "Tune OK" and the watt-meter and PRC-4090 handset should show a low value reflected power consistent with a VSWR of better than 2:1. Select the lowest desired frequency on the transceiver and repeat the above procedure. The result should be the same, except that the tune cycle may take somewhat longer. If the above procedure does not give the results indicated, check that the antenna length and connections are correct and re-check all ground (earth) connections.

Note: When received, the Barrett 4045 automatic antenna tuner memory system will not have any pre-stored tuning information appropriate to your installation. To allow the 4045 to 'learn' its tuning information, simply proceed from one channel to the next allowing the normal tune cycle to take place. Each successful tune is 'memorised' so that when that channel is re-selected the tuner will almost instantaneously retune to that frequency.

Connection Details for a PRC-4090 Transceiver and 4045 Automatic Antenna Tuner in a Base Station Configuration

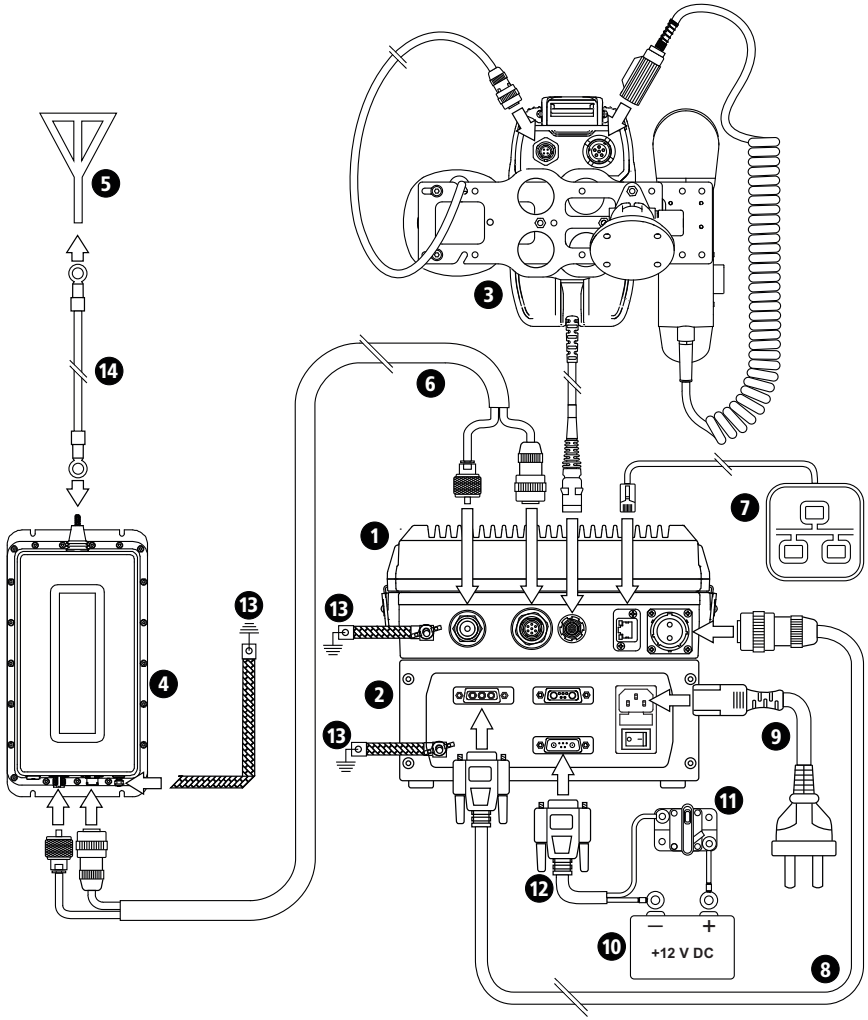

1	Barrett PRC-4090 HF SDR Transceiver (P/N 4090-00-01) and System Docking Station (P/N 4090-05-00)
2	PRC-4022 AC Power Supply (P/N 4090-06-01)
3	PRC-4090 Control Handset (P/N 4090-01-09) and Control Handset Docking Station (P/N 4090-05-03)
4	Barrett 4045 Automatic Antenna Tuner (P/N 4045-00-01)
5	Antenna
6	Coaxial / Control Cable (P/N 4019-00-02)
7	IP Network Connection via RJ45 cable
8	Power cable from Barrett PRC-4090 SDS to PRC-4022 Power Supply (P/N 4090-03-02)
9	IEC mains cord (P/N SA-00020)
10	12 V (or 24 V) DC Battery
11	Circuit breaker
12	3 metre battery back-up cable for PRC-4022 Power Supply (P/N 4090-06-08)
13	Ground (Earth)
14	Antenna Feeder Cable

Connection Details for a PRC-4090 and a Military Whip Installation

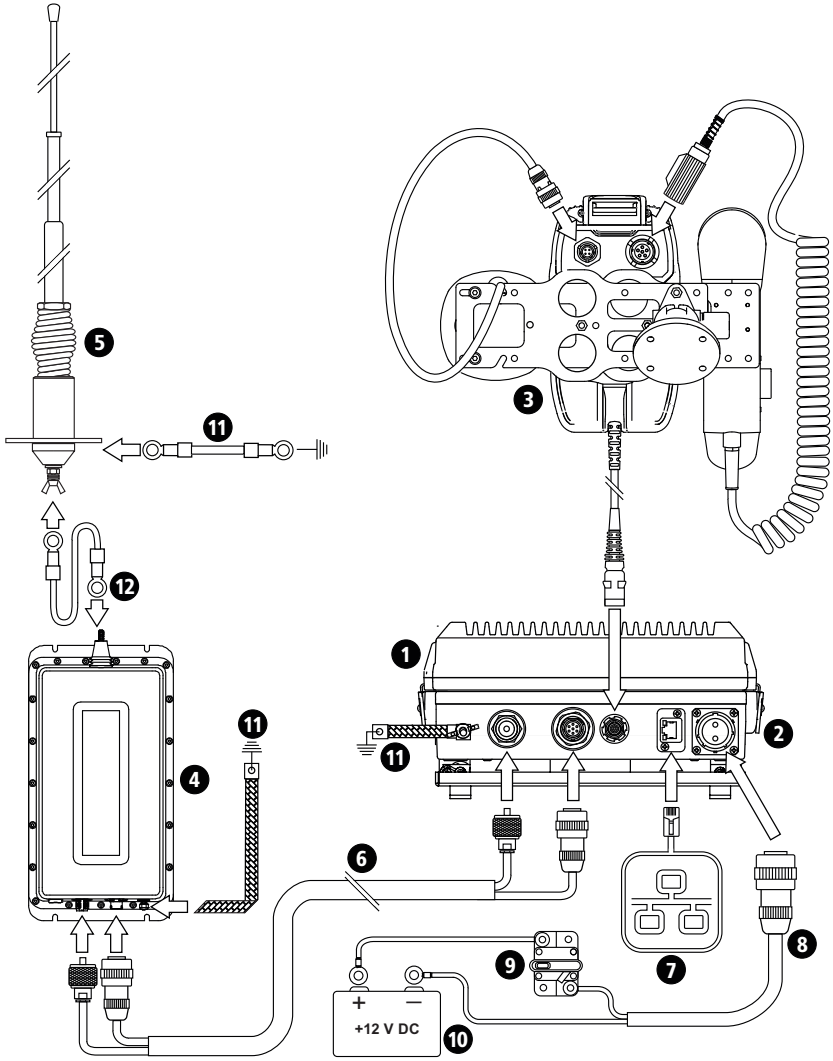

1	Barrett PRC-4090 HF SDR Transceiver (P/N 4090-00-01)
2	Barrett PRC-4090 System Docking Station (P/N 4090-05-00) and Anti-Vibration Mount (P/N 4090-05-07)
3	PRC-4090 Control Handset (P/N 4090-01-09) and Control Handset Docking Station (P/N 4090-05-03)
4	Barrett 4045 Automatic Antenna Tuner (P/N 4045-00-01)
5	Military HF antenna and base sourced from Trival Antene (P/N AP4/M) and whip sections (P/N AD-4/1-3)
6	Coaxial / control cable (P/N 4019-00-02)
7	IP Network Connection via RJ45 cable
8	DC power cable to Battery (P/N 4090-03-06)
9	Circuit breaker
10	12 V (or 24 V) DC Battery
11	Cable from 4045 Automatic Antenna Tuner to military whip (P/N 4019-00-02)
12	Ground (earth)

Tactical Broadband Dipole Antenna (2090-02-03)

The Tactical Broadband Dipole Antenna is a dipole antenna with loading to allow broadband operation. For operation, each side of the antenna is unwound to its full length. Throwing cords are provided that can be used to elevate the antenna or tie it to ground for an inverted V configuration. The antenna will handle continuous data and CW transmission. The antenna can be used in a number of configurations, depending on structures available for elevation.

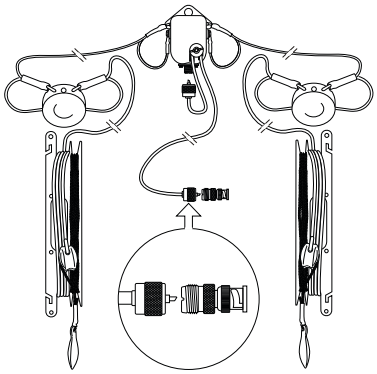

Tactical Broadband Dipole Antenna Configurations

Horizontal Dipole

The horizontal dipole has maximum gain on the broadsides of the antenna and reduced gain along the axis. Height above ground affects radiation angle. Lower heights give higher angle radiation, better for NVIS (short distance). Higher heights give lower radiation angle, better for long distance communication.

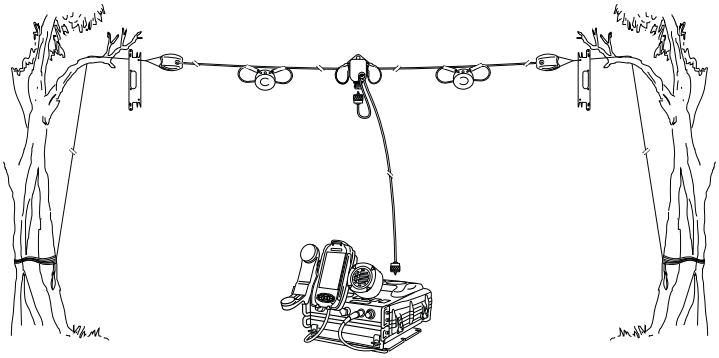

Inverted V

The inverted-V has a more omni-directional pattern than the Horizontal Dipole, with lower maximum gain. The ends of the antenna should be at least 0.5 m above ground. Suitable mainly for NVIS and medium distance.

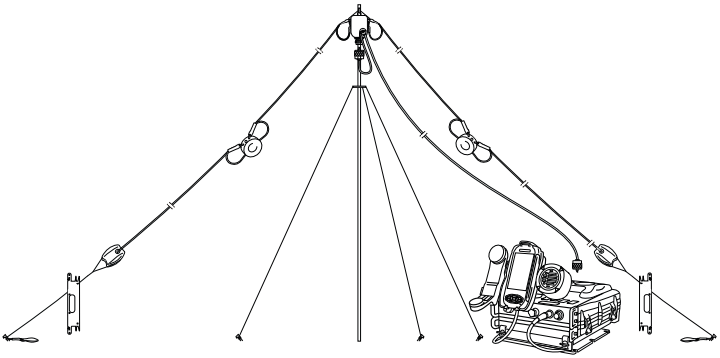

Sloping Dipole

Radiation with the Sloping Dipole becomes more directional, with increased gain in the direction of the lower end of the antenna, and reduced gain towards the higher end.

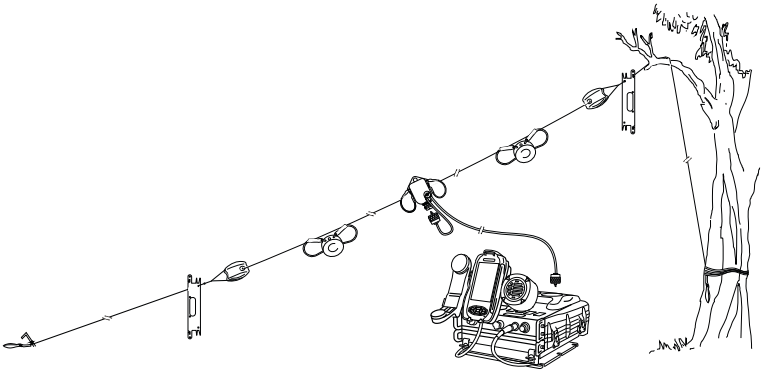

Inverted U

The inverted U has a radiation pattern between that of horizontal dipole and inverted V. For optimum performance, the radiating elements should be fully unwound, and should not touch the ground. Suitable for NVIS to medium distance. Longer distance performance will be enhanced by erecting the antenna at a height of 10 m or more.

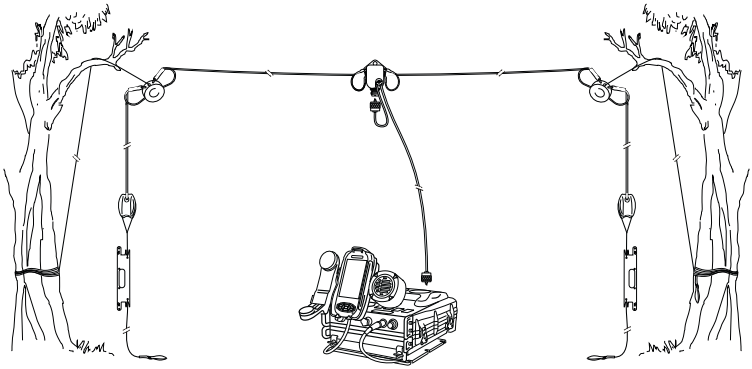

APPENDICES 8

This chapter contains the following sections:

- Appendix 1- Specifications
- Appendix 2 - Connectors
- Appendix 3 - Overview of HF Operation
- Appendix 4 - BITE Test

Appendix 1 - Specifications

General

Transmit frequency range	1.5 MHz to 30 MHz (reduced performance below 1.6MHz)
Receive frequency range	250 kHz to 30 MHz
Frequency stability	±10Hz ±0.1PPM over temperature range of -30°C to +70°C (±0.5PPM if ESU not ready)
Frequency resolution	10Hz: Program Mode 1Hz: Tunable Receiver
Operating modes	J3E (USB, LSB) - H3E (AM) - J2A (CW) - CF (Custom Filter) - ISB (data option)
Filter bandwidth	Fully software defined standard and custom filter range from 300Hz to 3000Hz (6kHz ISB option)
Operating temperature	-30°C to +70°C relative humidity 95% , non-condensing
Frequency hopping	Barrett HF Frequency Hopping algorithms - 25 or 5 hops per second with External Synchronisation Unit (ESU) supplied when the option is fitted. Improved internal clock to maintain clock synch without GPS signal for extended periods in the field (Minimum 48 hrs w/o GPS Signal)
Selcall system	Based on CCIR 493-4, four and six digit systems. Simple mode for a single radio ID. Expanded mode to allow for multiple Selcall IDs. Option: ICAO Annex 10 Selcall Encode (ARINC).
ALE Standards (options)	MIL-STD-188-141B (2G) JITC Certified, FED STD 1045 MIL-STD-188-141B Appendix C (3G), STANAG 4538

Digital Voice Encryption	Enhanced Digital Voice and Secure Digital Voice options with choice of autobauding “Low Rate” vocoder option (TWELP/MELP Non-proprietary - customisation available) providing superior voice recovery on poor channels down to -3dB. - AES 256 Digital Encryption with 600/1200/2400bps Vocoder - DES 56 Digital Encryption with 700/1200/2400bps Vocoder
Security	Zeroise, Over Air Transceiver Lock, Transceiver Kill
User Interface	Ruggedised touch screen and keypad (VFO control in RX/TX Scroll).
LCD Display	4.3 inch 800 x 480 pixel display with capacitive touch-screen
Current consumption	350 mA standby (muted)
Channel capacity	1000 programmable channels
Contact Capacity	500 contacts
Scan Tables	10 scan tables
Noise Reduction (DSP)	3 level settings
Nominal Voltage	+13.8VDC, Negative Ground
Operating Voltage Range	+11 V to +28 V DC operation
Over Voltage Protection	Up to 35V
Reverse Voltage Protection	Built in
Weight	3.10 kg (transceiver only)
Width	241 mm (transceiver only)
Depth	331 mm (transceiver only)
Height	53 mm (transceiver only)

Receiver

Sensitivity (250kHz - 30MHz)	-126dBm (0.112μV) for 10dB SINAD – J3E Mode (Specification typical across frequency band, reduced sensitivity between 250kHz and 500kHz)
Selectivity J3E	-1kHz and +4kHz: Better than 70dB -2kHz and +5kHz: Better than 70dB -5kHz and +8kHz: Better than 75dB
Selectivity J2B (option)	-500Hz and +500Hz: Better than 60dB
Blocking	Max usable sensitivity -20kHz and +20kHz: better than 95dB
Intermodulation Distortion	Better than 110 dBμV
Spurious response ratio	Better than 95 dB
Reciprocal mixing	Better than 110 dBμV (As defined in ITU-R F.612)
In-band IMD	Better than 40 dB
Audio output	4 W into 4 ohm at less than 2% distortion
Audio response	-6dB for 300Hz to 2700 Hz (adjustable bandwidth)
Handset Audio - Output Max	6.5 mW into a 1 k ohm load ±1.5 dB, with a 1 kHz tone.

Transmitter

Power Output	SDS configuration: 150W, 125W, 30W, 10W PEP (+ 20% Max) (2 tone or voice) * Manpack configuration: 30W, 10W PEP + 20% (2 tone or voice)
Duty cycle	100% 2 tone input with fan option (-30°C to +50°C relative humidity 95%, non-condensing)
Protection	Safe under all load conditions, thermal protection against excessive power transistor temperatures

Intermodulation Products	Better than 32dB below PEP (26dB below two-tone peak)
Current Draw	10W: 4.5A (1 tone), 3.5A (2 tone)
Transmit 13.8VDC	30W: 8.5A (1 tone), 6A (2 tone)
	125W: 23.5 (1 tone), 20.5A (2 tone)
	150W: 24.5 (1 tone), 20.5A (2 tone)
Current Draw	10W: 4.0A (1 tone), 3.5A (2 tone)
Transmit 15VDC	30W: 7.5A (1 tone), 5.5A (2 tone)
	125W: 23.5A (1 tone), 18.5A (2 tone)
	150W: 23.5A (1 tone), 17.5A (2 tone)
Current Draw	10W: 3.5A (1 tone), 3.0A (2 tone)
Transmit 24VDC	30W: 5.5A (1 tone), 3.5A (2 tone)
	125W: 15.5A (1 tone), 11.5A (2 tone)
	150W: 15.5A (1 tone), 11.5A (2 tone)

** Australia and Canada Power Output is capped at 100W*

Specifications are typical. Equipment descriptions and specifications are subject to change without notice or obligation.

Appendix 2 - Connectors

Transceiver

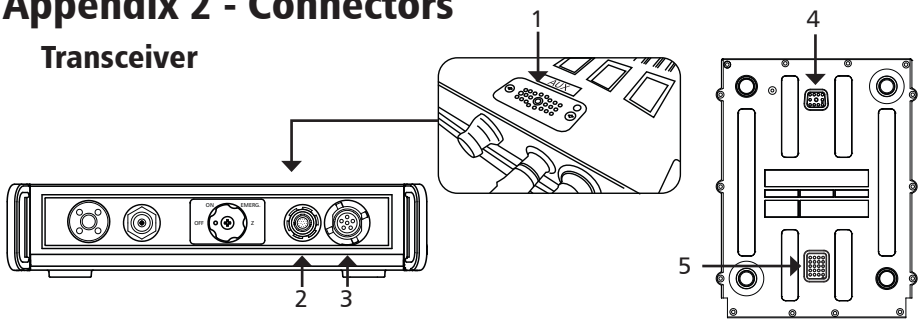

1. Auxiliary Connector

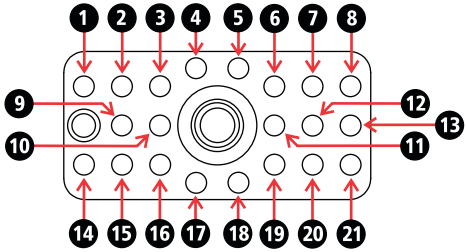

PIN	Signal
1	CW Key
2	1 Pulse per Second
3	GPS data NMEA format
4	+5V Out
5	13V8 Out
6	Scan Stop
7	Balanced Audio Out Positive
8	Balanced Audio Out Negative
9	PTT Out
10	Ground
11	Auxiliary Power Enable
12	Auxiliary Line In Positive
13	Auxiliary Line In Negative
14	Auxiliary Digital Out 1
15	Auxiliary Digital Out 2