PIN	Signal
16	Mute State
17	USB Data Positive
18	USB Data Negative
19	+5 USB
20	Auxiliary PTT
21	Auxiliary Digital In

2. Control Handset Connector

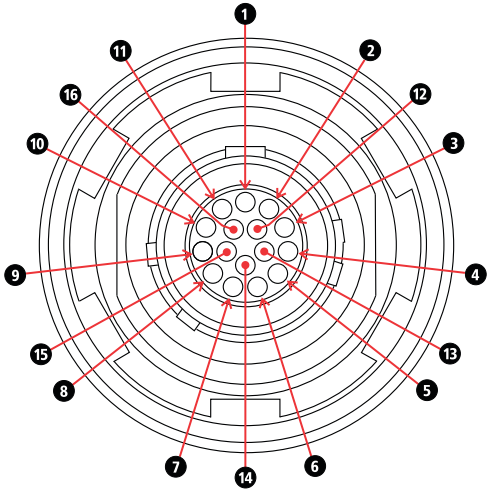

PIN	Signal
1	Ground
2	Handset Voltage
3	CAN Bus positive
4	CAN Bus Negative
5	Handset Audio Positive
6	Handset Audio Negative
7	Ethernet TX Data positive
8	Ethernet TX Data negative
9	Ethernet RX Data positive

PIN	Signal
10	Ethernet RX Data negative
11	Handset GPS 1 Pulse per Second
12	Reserved
13	Reserved
14	Reserved
15	Reserved
16	Reserved

3. H-250 Handset Connector

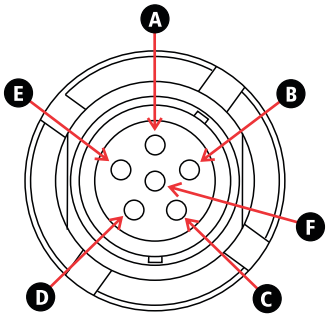

PIN	Signal
A	H250 Handset Ground
B	H250 Speaker output
C	H250 PTT
D	H250 Microphone
E	Reserved
F	Reserved

4. Power Connector

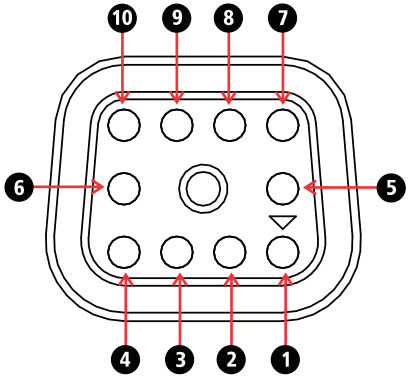

PIN	Signal
1	Input Voltage
2	Input Voltage
3	Input Voltage
4	RS232 Transmit
5	Input Voltage
6	RS232 Receive
7	Ground
8	Ground
9	Ground
10	Ground

5. SDS Connector

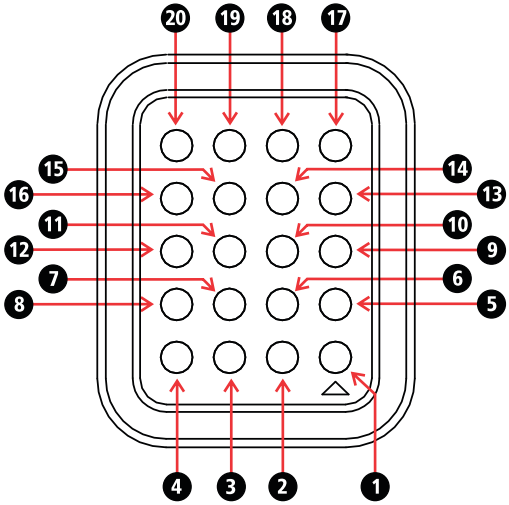

PIN	Signal
1	Handset Voltage
2	Handset GPS 1 Pulse per Second
3	CAN Bus positive
4	CAN Bus Negative
5	External GPS 1 Pulse per Second
6	Reserved
7	Handset Audio Negative
8	Handset Audio Positive
9	Ground
10	Ground
11	SDS Voltage Enable
12	SDS Voltage Enable
13	External ATU Voltage
14	External ATU Scan signal
15	External ATU Tuned signal
16	SDS Detect

PIN	Signal
17	Ethernet TX Data positive
18	Ethernet TX Data negative
19	Ethernet RX Data positive
20	Ethernet RX Data negative

Battery Pack

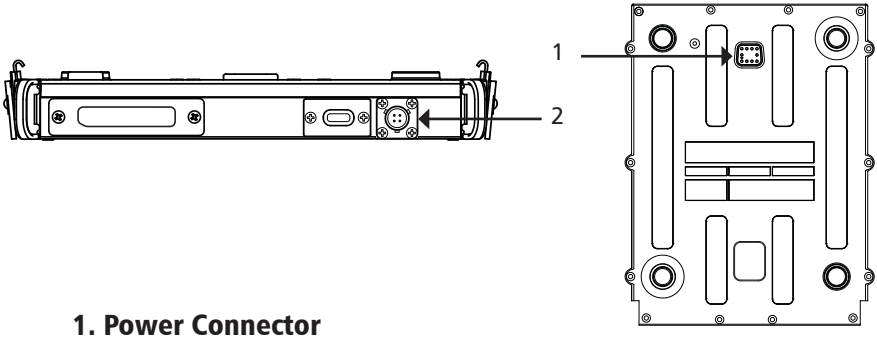

1. Power Connector

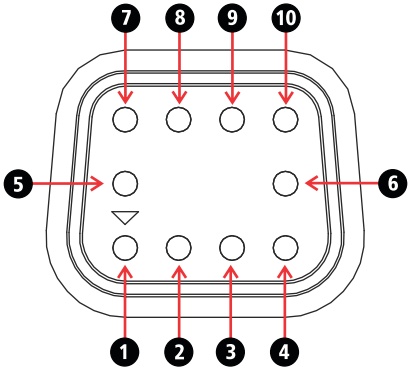

PIN	Signal
1	Input Voltage
2	Input Voltage
3	Input Voltage
4	Battery communication Transmit
5	Input Voltage
6	Battery communication Clock
7	Ground
8	Ground
9	Ground
10	Ground

2. DC In

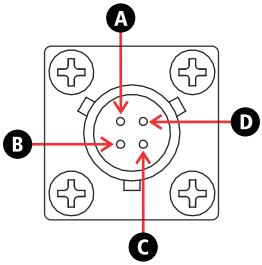

PIN	Description
A	DC Positive
B	DC Positive
C	DC Negative
D	DC Negative

System Docking Station (SDS)

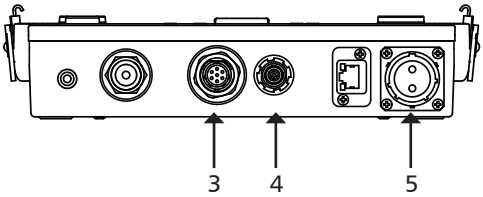

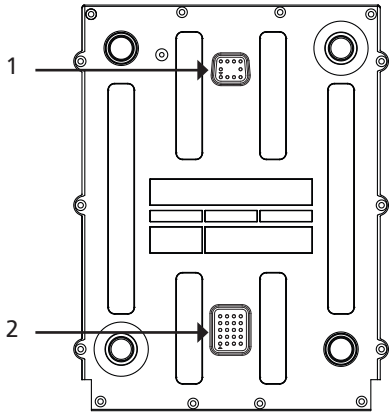

1. Power Connector

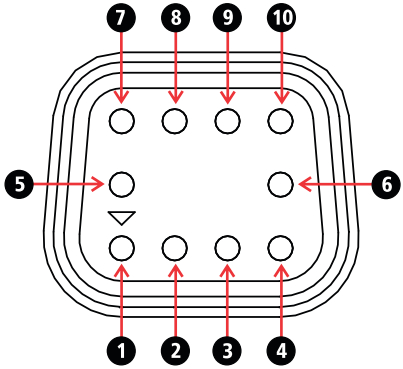

PIN	Signal
1	Input Voltage
2	Input Voltage
3	Input Voltage
4	RS232 Transmit
5	Input Voltage
6	RS232 Receive
7	Ground
8	Ground
9	Ground
10	Ground

2. SDS Connector

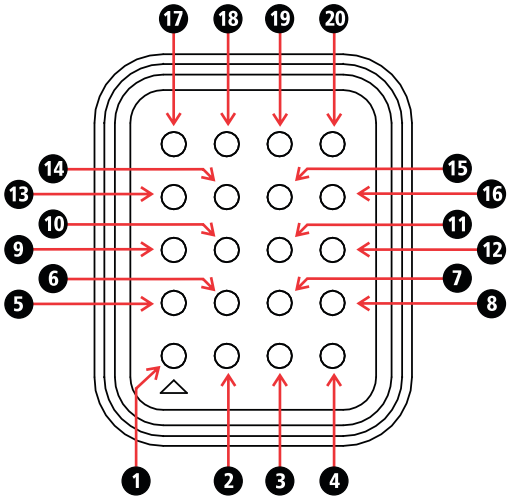

PIN	Signal
1	Handset Voltage
2	Handset GPS 1 Pulse per Second
3	CAN Bus positive
4	CAN Bus Negative
5	External GPS 1 Pulse per Second
6	Reserved
7	Handset Audio Negative
8	Handset Audio Positive
9	Ground
10	Ground
11	SDS Voltage Enable
12	SDS Voltage Enable
13	External ATU Voltage
14	External ATU Scan signal
15	External ATU Tuned signal
16	SDS Detect

PIN	Signal
17	Ethernet TX Data positive
18	Ethernet TX Data negative
19	Ethernet RX Data positive
20	Ethernet RX Data negative

3. ATU Connector

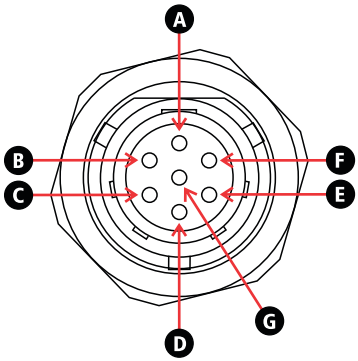

PIN	Signal
A	Ground
B	Receive Data line
C	1 pulse per second
D	ATU Scan Line
E	ATU Tuned signal
F	ATU Voltage 13V8
G	Transmit data line

4. Control Handset Connector

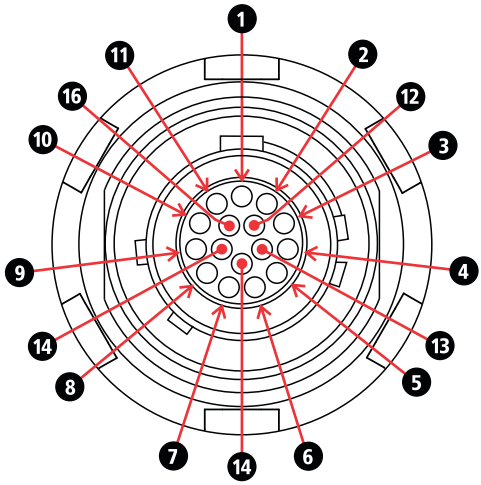

PIN	Signal
1	Ground
2	Handset Voltage
3	CAN Bus positive
4	CAN Bus Negative
5	Handset Audio Positive
6	Handset Audio Negative
7	Ethernet TX Data positive
8	Ethernet TX Data negative
9	Ethernet RX Data positive
10	Ethernet RX Data negative
11	Handset GPS 1 Pulse per Second
12	Reserved
13	Reserved
14	Reserved
15	Reserved
16	Reserved

5. DC Input Connector

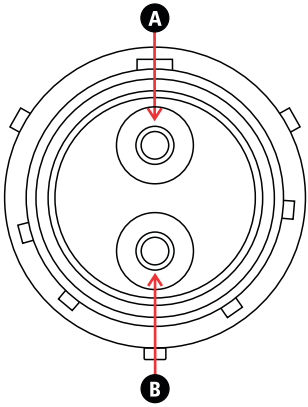

PIN	Signal
A	Input Voltage (+11 V to +28 V DC)
B	Ground

Control Handset

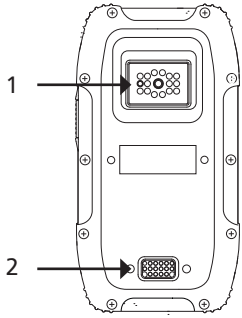

1. Handset Auxiliary Connector

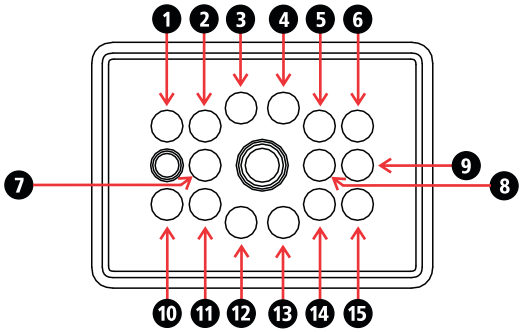

PIN	Signal
1	Reserved
2	Reserved
3	USB Data Positive
4	USB Data Negative
5	+5 USB
6	Reserved
7	Ground
8	Ground
9	Handset Dock detection
10	Speaker Out Negative

PIN	Signal
11	Speaker Out Positive
12	Dock Speaker Detection
13	H250 Microphone Input
14	H250 PTT
15	H250 Speaker output

2. Control Handset Cable Connector

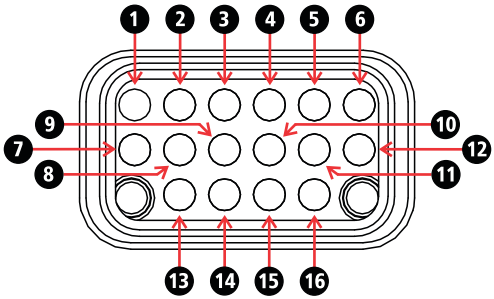

PIN	Signal
1	Handset Voltage
2	CAN Bus positive
3	4050 Detect voltage
4	Handset GPS 1 Pulse per Second
5	Handset Audio Positive
6	Ground
7	CAN Bus Negative
8	Speaker Out Negative
9	Reserved
10	Reserved
11	Speaker Out Negative
12	Handset Audio Negative
13	Ethernet TX Data positive

PIN	Signal
14	Ethernet TX Data negative
15	Ethernet RX Data positive
16	Ethernet RX Data negative

Handset Docking Station

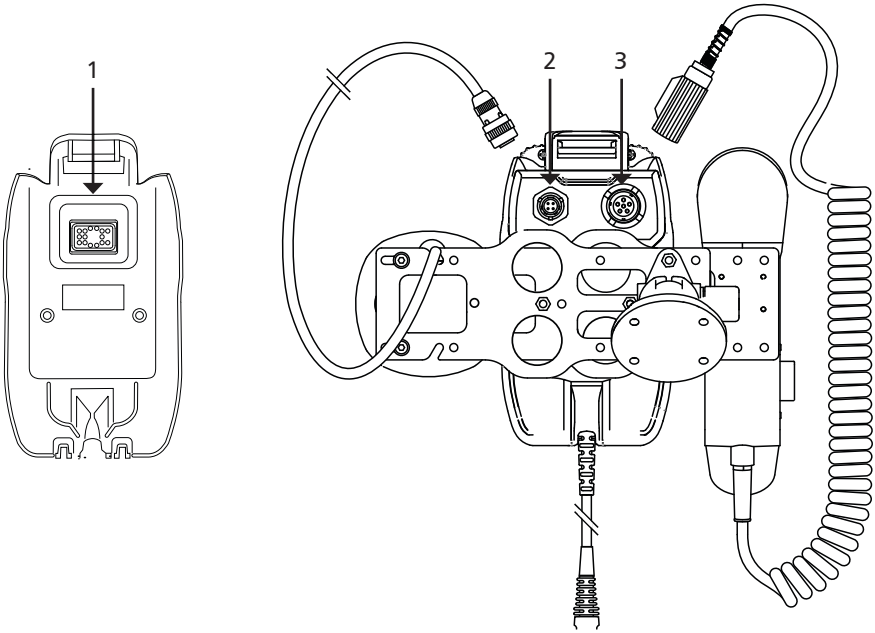

1. Cradle Auxiliary Connector

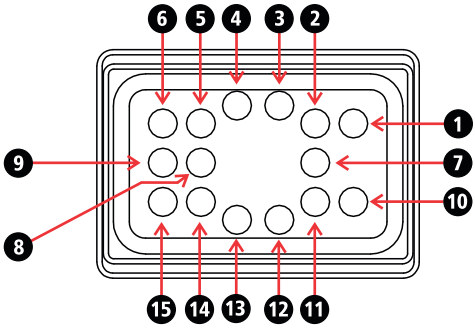

PIN	Signal
1	Reserved
2	Reserved
3	USB Data Positive
4	USB Data Negative
5	+5 USB
6	Reserved
7	Ground
8	Ground
9	Handset Dock detection
10	Speaker Out Negative
11	Speaker Out Positive
12	Dock Speaker Detection
13	H250 Microphone Input
14	H250 PTT
15	H250 Speaker output

2. External Speaker Connector

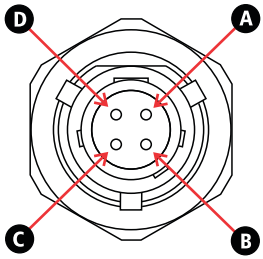

PIN	Signal
A	Dock Speaker Detection
B	Speaker Out Positive
C	Speaker Out Negative
D	Ground

3. H-250 Handset Connector

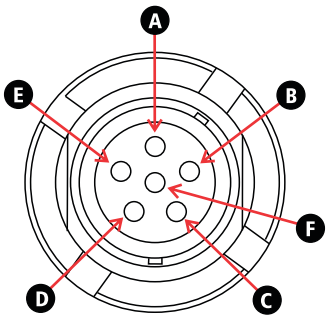

PIN	Signal
A	H250 Handset Ground
B	H250 Speaker output
C	H250 PTT
D	H250 Microphone
E	Reserved
F	Reserved

Appendix 3 - Overview of HF Operation

HF (High Frequency) is the radio spectrum with frequencies between 1.5 and 30 MHz. Within this radio spectrum an efficient form of transmitter modulation, SSB (Single Side Band), is used. This, combined with the use of the ionosphere - a layer of ionisation gases that resides between 100 and 700 km above the Earth's surface, provides efficient, cost effective communications over short, medium and long distances - without the need for expensive re-transmission devices, such as the VHF or UHF repeaters or satellites, all of which have ongoing operational costs and a reliance on a physical infrastructure.

In many remote areas, HF / SSB is the only form of communication possible.

HF Propagation

When HF / SSB radio waves are generated by the transceiver there are usually two components:

- The ground-wave, which travels directly from the transmitting antenna to the receiving antenna following the contours of the Earth.
- The sky-wave, which travels upward and at an angle from the antenna, until it reaches the ionosphere (an ionised layer high above the Earth's surface), and is then refracted back down to Earth, to the receiving antenna.

Generally speaking, ground-wave is used to communicate over shorter distances usually less than 50 km. Because ground-wave follows the contours of the earth, it is affected by the type of terrain it passes over. Ground wave is rapidly reduced in level when it passes over heavily forested areas or mountainous terrain.

Sky-wave is used to communicate reliably over medium to long distances up to 3,000 km. Whilst the nature of sky-wave propagation means it is not affected by the type of terrain as in ground-waves, it is affected by factors involving the ionosphere as described below.

Radio Wave Propagation

The following illustrations show the characteristics of ground-wave and sky-wave propagation during day and night time. In each illustration the height of the ionosphere above the ground is shown.

In both illustrations Station A communicates with Stations B, C and D. Propagation from Station A to B is by ground-wave. The diagrams illustrate that the ground-wave is not affected by the time of day and the height of the ionosphere above the ground.

Propagation from Station A to C and D, is by sky-wave and as the diagrams illustrate, the sky-wave is significantly affected by the time of day and the height of the ionosphere above the ground.

Under each diagram there are recommended working frequencies listed. Please note that these will vary according to time of year and other factors. They are intended only as a guide and are subject to change.

Day

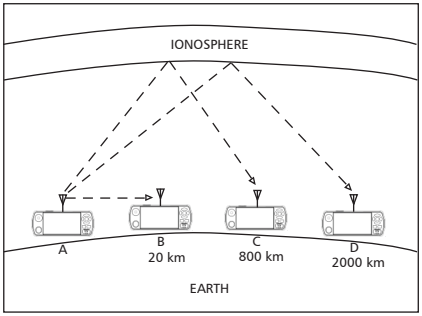

The sun is higher
The ionosphere is higher
The best frequency to use is higher.

A to B - Possible optimum working frequency is 3 MHz

A to C - Possible optimum working frequency is between 7 - 9 MHz

A to D - Possible optimum working frequency is between 13 - 16 MHz

Night

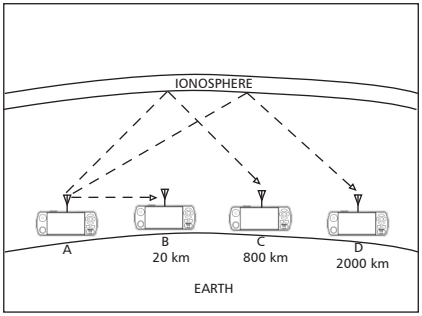

The sun is lower
The ionosphere is lower
The best frequency to use is lower.

A to B - Possible optimum working frequency is 3 MHz

A to C - Possible optimum working frequency is between 5 - 7 MHz

A to D - Possible optimum working frequency is between 9 - 12 MHz

Factors Which Affect HF/SSB Communications

There are a number of different factors which will affect the success of communications via HF/SSB radio. These are outlined below:

Frequency Selection

Frequency selection is perhaps the most important factor that will determine the success of your HF/SSB communications.

Generally speaking the greater the distance over which you want to communicate, the higher the frequency you should use.

Beacon Call, a Selcall (Selective Call) function built into the Barrett PRC-4090 Transceiver, makes finding the correct frequency to use easy. A Beacon Call is based on the network of transceivers all having a selection of frequencies that will accommodate most ionospheric conditions. When in standby, the network transceivers scan these frequencies waiting for a call (Selcall or Beacon Call) from another transceiver. The transceiver wishing to check for the best frequency to operate on sends a Beacon Call to the station to be contacted. If the call to the other station is successful, a revertive tone from the station being called will be heard, indicating the channel selected was suitable for the ionospheric conditions prevailing. If the revertive tone is not heard or is very weak, another channel may be tried until a revertive tone of satisfactory signal strength is heard.

(Refer to Beacon Calls on page 38 for more details.)

Time of Day

As a rule, the higher the sun, the higher the frequency that should be used. This means that you will generally use a low frequency to communicate early morning, late afternoon and evening, but you will use a higher frequency to cover the same distance during times when the sun is high in the sky (for example, midday). You will need to observe the above rule carefully if your transceiver has a limited number of frequencies programmed into it, as you may only be able to communicate effectively at certain times of the day.

Weather Conditions

Certain weather conditions will also affect HF/SSB communications. Stormy conditions will increase the background noise as a result of static caused by lightning. This background noise could rise to a level that will blank out the signals you are trying to receive.

Man-made Electrical Interference

Interference of an electrical nature can be caused by overhanging power lines, high power generators, air-conditioners, thermostats, refrigerators and vehicle engines, when in close proximity to your antenna. The result of such interference may cause a continuous or intermittent increase in the level of background noise.

System Configuration and Installation

The method in which your system is configured and installed will also affect the success of your HF/SSB communications. Your choice of antenna system and power supply is critical. Correct installation is also extremely important. An HF/SSB transceiver is generally installed using different rules to those used to install VHF or UHF transceivers. Failure to correctly install an HF/SSB system will greatly affect the communications quality you will obtain.

Your local Barrett representative will be able to assist with your system configuration and/or installation.

HF Communications Compared with VHF or UHF Short Distance Communications

Communications on any HF/SSB transceiver will sound different to that on a VHF (Very High Frequency) radio or UHF (Ultra High Frequency) radio or telephone. This is because of the nature of HF propagation and the modulation methods used. On HF/SSB transceivers there will always be background noise evident behind the signal you are receiving and this will increase when there is electrical interference or thunderstorm activity in the area.

Appendix 4 - BITE Test

It is recommended that any accessories (ATU, linear amplifier, Dual Antenna Switch Unit, secondary control head, GPS etc.), auxiliary port connections and the antenna be disconnected from the SDS or manpack to get consistent BITE test results. Additionally do not touch the control head and the microphone buttons while the tests are running.

Each test is outlined below as are possible causes for a failed result. If the fault is interfering with the everyday operation of the system, please contact your local Barrett dealer or Support at www.barrettcommunications.com.au.

Tests

Real Time Clock

This test checks if the real time clock on the microboard responds to commands. A failed test indicates an issue with the I2C bus on the **microboard** or a defective real time clock.

Pre Amplifier I/O

This test checks if the pre amplifier board is accessible by checking if the port expander responds to commands. A failed test indicates an issue with the I2C bus on the **microboard**, the **pre amplifier board** or a **loose connector** between the two transceiver halves.

Interface I/O

This test checks if the internal interface boards are accessible. A failed test indicates an issue with the I2C bus on the **microboard**, one of the **interface boards** or a **loose connector** between the two boards.

Local Oscillator

This test checks if the oscillator on the microboard is accessible. A failed test indicates an issue with the SPI bus on the **microboard** or a defective oscillator.

Audio Codec

This test checks if the audio codec on the microboard is accessible. A failed test indicates an issue with the I2C bus on the **microboard**, a failed DSB bootup, an ISP bus issue to the DSP or a defective audio codec.

Analog to Digital Converter

This test checks if the A/D converter for measuring the final stage voltage is accessible. A failed test indicates an issue with the I2C bus on the **microboard**, the **pre amplifier board**, a **loose connector** between the two transceiver halves or a defective A/D converter.

Temperature Sensor

This test checks if the temperature sensor for measuring the final stage temperature is accessible. A failed test indicates an issue with the I2C bus on the **microboard**, the **pre amplifier board**, a **loose connector** between the two transceiver halves or a defective temperature sensor.

Digital to Analog Converter

This test checks if the D/A converter for controlling the boost converter is accessible. A failed test indicates an issue with the I2C bus on the **microboard**, the **pre amplifier board**, a **loose connector** between the two transceiver halves or a defective D/A converter.

Rx Current

This test checks if the overall current draw while in receive mode (idle) is below 1A. This test can fail if too many accessories (Dual Antenna Switch Unit, ATU, linear amplifier etc) are connected to the SDR or if the accessories are faulty. Disconnect all accessories and rerun the tests. If the test is failed again, there is an issue with the **pre amplifier board**.

Tx Current

This test checks if the overall current draw while in transmit mode (BIAS current added) is between 1A and 4A. A failed test indicates the same issues as with the “Rx Current” test. Additionally, there may be an issue with the final stage on the **pre amplifier board**.

Final Voltage

This test checks if the voltage of the final stage is between 28V and 32V. A failed test indicates a defective **pre amplifier board** (port expander fails to configure the pre amplifier board, the D/A converter fails to set voltage, the boost converter fails or the A/D converter fails to read the voltage).

EEPROM

This test checks if the EEPROM allows read/write access. A failed test indicates a faulty EEPROM on the **microboard**.

Rx Test

This test checks the receiver chain with a synthetic signal. A failed test indicates a defect on the **microboard** (e.g. synthesizer, digital IF, etc).

Automatic Gain Controller

This test cycles through the attenuators and checks if the AGC adjusts itself accordingly. A failed test indicates a defect on the **microboard** (e.g. attenuators).

Warranty Statement

Barrett Communications (hereafter referred to as 'Seller') provides a three (3) year warranty on all Barrett products from the date of shipment from the Seller. A one (1) year warranty from the date of shipment from the Seller is provided for all batteries.

Each warranty guarantees acceptable performance of the product under normal recommended conditions for the duration of the warranty period. In cases of accident, abuse, incorrect installation or maintenance by a non-Seller representative, subjection to abnormal environmental conditions, negligence or use other than those in accordance with instructions issued by the Seller, the warranty shall be voided. In addition, this warranty shall not cover low performance – specifically the distance or quality of transmission and reception - due to unfavourable environmental or locational conditions. Nor shall this warranty cover the quality of transmission and reception of transceivers mounted in vehicles or vessels that have not been sufficiently electrically suppressed.

Should any fault due to bad design, workmanship or materials be proven at any time within the warranty period, the Seller will rectify such fault free of charge provided that the equipment is returned, freight paid, to Barrett Communications Pty Ltd head office or to an authorised service centre. The repaired or replaced product will remain covered under and throughout the term of the original warranty period up to its expiration. No repair or replacement will extend the warranty term past the original thirty-six (36) month anniversary of the original date of shipment from the Seller.

Firmware and software (pre-installed, stand-alone or provided as an update), hereafter referred to as 'Software', is guaranteed to perform acceptably within the specifications provided by the Seller, provided that the Software is within the warranty period.

Should Software not perform acceptably, the Seller will use all commercially reasonable efforts to correct such nonconformity as reported to the Seller directly or via a support representative. The Seller is not obliged to update Software under warranty if the nonconformity is caused by a) the use or operation of the Software in an environment other than intended or recommended by the Seller in relevant documentation, or b) modifications made to the Software not authorised or undertaken by the Seller or a representative of said Seller.

Subject to the matters set out in this warranty, no liability, expressed or implied is accepted for any consequential loss, damage or injury arising as a result of a fault in the equipment and, all expressed or implied warranties as to quality or fitness for any purpose are hereby excluded.

This warranty does not extend to products supplied by the Seller which are not designed or manufactured by it. The Seller will however make every endeavour to ensure that the purchaser receives full benefit on any warranty given by the original equipment manufacturer.

This warranty is restricted to the original purchaser except where the original purchaser is a reseller authorised by the Seller who has purchased for the purpose of resale, warranty shall be extended to the reseller's customer.

Contact Details

Our customer / dealer technical support department can be contacted via land mail, email, telephone or via support ticket on the technical support web page.

https://www.barrettcommunications.com.au/support/

Barrett Communications Pty Ltd Head Office:

PO Box 1214, Bibra Lake WA 6965 AUSTRALIA

Toll Free Tel: 1800 999 580 (Within Australia)
Tel: +618 9434 1700
Fax: +618 9418 6757
email: support@barrettcommunications.com.au

Telephone support from the Australian office is available from 7:30 am to 4:00 pm local time Monday to Friday.

Barrett Communications – Europe:

Unit 9, Fulcrum 2 Victory Park, Solent Way,
Whiteley Hampshire PO15 7FN United Kingdom

Tel: +44 (0) 1489 880 332
Fax: +44 (0) 1489 565 422
email: support@barrettcommunications.co.uk

Telephone support from the UK office is available from 8:30 am to 5:00 pm local time Monday to Friday.

Barrett Communications Corporation USA:

190 Office Park Way
Pittsford, N.Y. 14534

Tel: +1 585 582 6134
email: support@barrettusa.com

Telephone support from the USA support office is available from 8:30 am to 5:00 pm local time Monday to Friday.

Index

A

Advanced Call History 43

All call 79

Antenna

912 Multi wire Broadband Dipoles 164

2019 Automatic Tuning Mobile Antenna 145

Assembly 151

Connection Details (Mobile Pack) 145

Mounting 147

4011 Automatic Antenna Tuner for Base Station 169

Connection Details 172

4017 Automatic Tuning Horizontal Dipole 166

Connection Details 167

Noise Suppression 143

ARINC 4, 32, 35, 75, 76

Audio 59, 63, 75, 77, 78, 96, 186

Mute 88

B

Base Station 24, 86, 109, 156, 169, 172

Beacon Call 30, 32, 38, 39, 48, 49, 51, 52, 54, 96, 208

C

Call History 4, 37, 40, 42, 43

Call History Menu 43

CCIR 4, 30, 31, 32, 56

Channel labels 68

Collective Call 75, 79

Configuration 73, 74, 77, 172, 209

Contacts 29, 34, 36, 37, 38, 39, 41, 48, 49, 51, 52, 54

D

Digital Voice 75, 78, 80, 103, 159

Display 4, 19, 59, 64

Dual Port Antenna Switch Unit 85

E

Earth 170, 206

Emergency Call 17, 27, 28, 32

Export 73, 80, 81, 82

F

Frequency Hopping 4, 75, 82

G

General Configurations screen 60, 62

GPS Position 51

GPS Push 83

GPS Request 49

Ground 78, 150, 168, 170, 173, 206

Group call 79

H

Hangup 41, 54, 55

Hopping 4, 75, 82, 102

I

Import 74

INT 4, 30, 31, 33, 48, 56

I/O 75, 83, 84

L

Label 19, 68, 69

M

Mobile Installations 109, 112, 133

Mode 69, 103

Mounting 141, 143, 147, 151, 153, 154, 155, 169

Mute 75, 78, 88, 89

  Audio 88

  Syllabic Sensitivity 88

N

Network 4, 56, 57, 69, 75, 90

Noise Reduction 75, 93

Noise Suppression 143, 144

O

OEM 4, 30, 31, 32, 33, 48, 56, 102

P

Pagecall 30, 48

Receive 48

Programming 27, 65, 66, 73, 79

R

RF 5, 75, 94, 95, 147, 162, 169, 171

RFDS 5, 27, 28, 30, 56

RS232 84, 85

S

Scan 5, 72, 96, 97, 98, 99

Scan Table 5, 97, 98, 99

Secure Call 32, 53, 54, 103

Secure Digital Voice 80, 103

Security 53, 75, 82, 100, 101, 102, 108

Selcall 2, 4, 5, 27, 28, 29, 30, 31, 32, 33, 35, 37, 38, 39, 40, 41, 42, 43, 47, 48, 50, 52, 56, 57, 76, 79, 85, 88, 96, 97, 98, 184, 208

Selcall ID 33, 35, 41, 42, 48, 50, 52, 79

Self ID 5, 29, 31, 33, 42

Self IDs 31

Serial Number 60, 61

Specifications

Receiver 186

Transmitter 186

SSL Mute 88

Status Call 52

Sub-group Call 79

Swipe Menu 21

T

Telcall 2, 5, 30, 32, 38, 41, 42

Tuning 75, 107, 145, 147, 152, 153, 166, 167, 169

V

Version Information 60

Voice Call 17, 26

Voice Mute 88, 89

VSWR 107

AUSTRALIA

(Head office and Manufacturing)

Barrett Communications Pty Ltd

47 Discovery Drive, Bibra Lake, WA 6163 Australia

Tel: +61 8 9434 1700

Email: info@barrettcomms.com

UK

(European office)

Barrett Communications - Europe

Unit 9, Fulcrum 2, Solent Way, Whiteley, Hampshire, PO15 7FN United Kingdom

Tel: +44 (0) 1489 880 332

Email: uksales@barrettcommunications.co.uk

USA

(US office and Manufacturing)

Barrett Communications USA Corp.

190 Office Parkway, Pittsford, NY 14534 United States of America

Tel: +1 585 582 6134

Email: sales@barrettusa.com