NORTECH

Nortech International (Pty) Ltd
P O Box 4099
Willowton Hub
Pietermaritzburg
3200 South Africa

32A Wiganthorpe Road
Pietermaritzburg
3201 South Africa
Reg. No. 98/10951

Tel: (033) 345 3456
Fax: (033) 394 6449
mkt@nortech.co.za

Int. Tel: +27 33 345 3456
Int. Fax: +27 33 394 6449
www.nortech .co.za

APPROVALS

Date: dd/mm/yy	Rev	CRN No.
22/07/98	00	0451
15/09/99	01	0640

Originator L. Grove / M.T. Maggs

Checked: _____ Date: _____

Engineering Manager: _____

Approved: _____ Date: _____

Marketing: _____

Checked and approved: _____ Date: _____

AUTOTAG-P
USER MANUAL

NORTECH INTERNATIONAL (PTY) LTD
All rights reserved
Copyright © 1999
Document No: 708UM0210-01
Date of issue: October 1999

This document is for information only and unless otherwise indicated, is not to form part of any contract. In accordance with the manufacturer's policy of continually updating and improving design, specifications contained herein are subject to alteration without notice.

Table of Contents

1. INTRODUCTION 4

2. TECHNICAL DATA 6

2.1. System Parameters 6

2.2. Autotag-P Base Station ATR430P series 6

2.2.1. Electrical 6

2.2.2. Mechanical 6

2.2.3. Environmental 6

2.2.4. RF Channel 6

2.2.5. Communications 7

2.2.6 Relay Outputs 7

2.3. Autotag-P Tag Transponder AT430P 8

2.3.1. Electrical 8

2.3.2. Mechanical 8

2.3.3. Environmental 8

2.3.4. RF Channel 8

2.3.5. Code 9

2.4. Autotag-P Tag with Proximity Transponder 9

3. FCC REGULATIONS 10

4. OPERATING PRINCIPLES 11

4.1. Radio Frequency Communications: Important concepts 11

4.1.2. Reflection and absorption 12

4.1.3. Noding and nulls 12

4.1.4. Radiation pattern 13

4.2. Autotag-P Communications Architecture 14

4.3. Coding 14

4.3.1 32 Bit User Data (Tag only) 14

4.3.2 16 Bit Installer Code 15

4.3.3 8 Bit Distributor / OEM Code 15

4.3.4 32 Bit Mask (Base Station Only) 15

4.4 R.F. Communications between Base Station and Tag 15

4.4.1. Poll from the Base Station 15

4.4.2 Response from the Tag 15

4.4.3 Acknowledge from the Base Station 15

4.5. Communication Protocol Options 16

4.5.1 Wiegand Communication Protocol 16

4.5.2 Clock&Data Communication Protocol 16

4.5.3 RS-232 – Autotag-P Point-to-point Communication Protocol 17

4.5.4 RS-485 – Nortech Multi-drop Communication Protocol 17

5. INSTALLATION 18
5.1. Base Station 18
5.1.1 General description 18
5.1.2. Autotag-P Base Station Packing List 18
5.1.3. Installation 19
5.1.4. Wiring 20
5.2 Tag 21
5.2.1. General description 21
5.2.2. Positioning 21
5.2.3 Mounting 21
5.3. Base Station Configuration Options 22
5.3.1 Base Station DIPSwitch settings: 23
5.3.2 Range adjustment: 25
5.3.3 Internal Diagnostic LED: 25
5.3.4 External Indicator Drivers 25
5.4. Commissioning 25
6. CONFIGURATION 27
6.1. Wiring Detail 27
7. CUSTOMER FAULT ANALYSIS 28
APPENDIX A – WIRING DIAGRAMMS 30
APPENDIX B – GOOSENECK MOUNTING PLATE 33

{tc ""}1. INTRODUCTION

The **Autotag-P** is a long range, hands free, vehicle identification system used in vehicular access applications.

The configuration consists of:

- a Base Station transceiver,
- portable programmable Tags.
- a loop detector (optional)

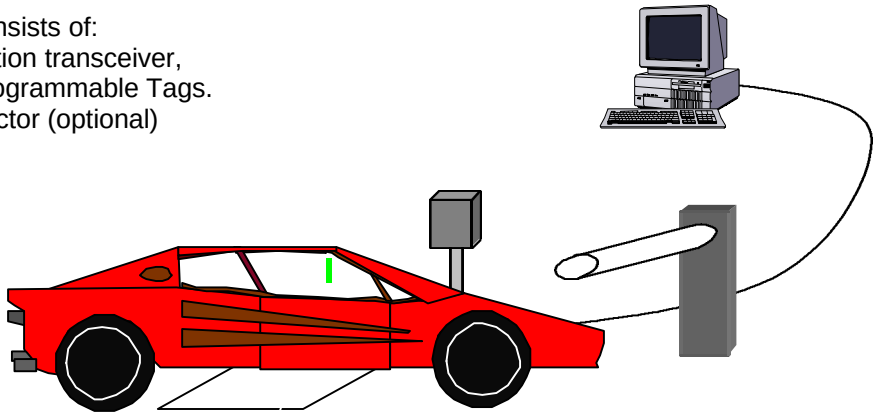

Figure 1.1. Configuration

Both the Tags and the Base Station are microprocessor controlled. This allows for increased robustness of the RF link, and flexibility with respect to coding and system configuration.

The Tag is positioned on the windscreen and is automatically triggered when the vehicle approaches within a set distance of the Base Station unit. Upon confirming that a Base Station unit is being communicated with, the Tag transmits a **unique** code. This code is received by the Base Station and is passed on to the associated access controllers.

Two possible modes of operation exist:

1. A loop detector informs the Base Station of the presence of a vehicle. The Base Station then transmits a Poll signal to the Tag, which responds with an ID code. The code is verified by the Base Station, which then initiates further action (eg. opening of a barrier).

2. The Base Station continually transmits a signal, thus waking up the Tag as soon as it comes within range. This renders the loop redundant and reduces the cost of the system.

Both configurations have their advantages. The first has increased integrity and reduces the chance of accidental triggering. It also drastically reduces the average radiation of the Base Station. The second has lower configuration and installation costs.

Communication between the Base Station and the associated control system (eg. time-and-attendance monitor) is via a choice of industry-standard protocols.

This document applies to the following models in the Autotag-P range:

AUTOTAG-P BASE STATION MODELS			
FT Number	**Part Number**	**Voltage**	**Protocol**
708FT0231	ATR431P-C2	115V AC	Clock & Data / Wiegand and RS-232
708FT0232	ATR432P-C2	230V AC	Clock & Data / Wiegand and RS-232
708FT0233	ATR434P-C2	12-24V DC	Clock & Data / Wiegand and RS-232
708FT0241	ATR431P-C4	115V AC	RS-485
708FT0242	ATR432P-C4	230V AC	RS-485
708FT0243	ATR434P-C4	12-24V DC	RS-485

AUTOTAG-P TRANSPONDER MODELS		
FT Number	**Part Number**	**Model**
708FT0210	AT430P	Programmable Tag
708FT0212	ATP430P	Programmable Tag with Proximity Transponder

RELATED DOCUMENTS:

708LF0211 Autotag-P Base Station Installation Guide
708LF0210 Autotag-P Tag Installation Guide
708DS0210 Autotag-P Data Sheet
708UM0201 Autotag-P Programming Station User Manual

2. TECHNICAL DATA

2.1. System Parameters

Configuration Encoding:	One Byte Distributor / OEM code (Allows for 255 unique distributor / OEM's). Two Byte Installer code (Allows for 65536 installers for each Distributor / OEM code).

Refer to Autotag-P Programmable Station User Manual Document Number 708UM0201 for more information,

2.2. Autotag-P Base Station ATR430P series

2.2.1. Electrical

Power Supply:	120V AC	708FT02X1	**ATR 431P**
	230V AC	708FT02X2	**ATR 432P**
	12 - 24V DC	708FT02X3	**ATR 434P**
		(Where X = 3 – RS-232 model = 4 – RS-485 model)	
Supply Tolerance:	±10%		
Current Consumption:	<200mA at 24V		
Protection:	Metal Oxide Varistor's, LC filtering & Transorb spike protector of the supply lines		

2.2.2. Mechanical

Dimensions:	220 mm x 220 mm x 67 mm
Material:	ABS Plastic
Mounting:	See Mounting Instructions (Section 4.1.2)

2.2.3. Environmental

Storage Temperature:	-40°C to +85°C	
Operating Temperature:	Mains versions	-40°C to +70°C
	DC versions	-40°C to +85°C
Humidity:	98% max.	
Environmental Sealing:	IP56	
Other:	UV resistant	

2.2.4. RF Channel

Operating Frequency:	433.92 Mhz nominal	
Intentional Radiator Compliance:	Complies to the following:	
	ETSI	I-ETS 300 220 (European Community)

EMI/EMC Compliance:	ETSI I-ETS 300 683
RF Output Power:	Adjustable to maximum of +10 dBm (10 mW)
Transmitter Modulation Type:	100% AM (OOK), PWM
Transmit Modulation Frequency:	167 Hz to 250 Hz
Transmitter Data Rate:	10 Bytes / sec
Transmitter Stability:	SAW resonator referenced
Receive Modulation Frequency:	375 Hz & 500 Hz
Receive Data Rate:	50 Bytes / sec
Receiver Stability:	Crystal referenced
Polarisation:	Elliptical

2.2.5. Communications

Interfacing protocols:	WIEGAND, CLOCK & DATA and RS-232 or RS-485 only.
Protection:	Transorbs on all external communications lines. Opto-isolator on arming input
Connectors:	Mains – 3 way plugable screw terminal DC power & relay – 5 way plugable screw terminal Interface and communications two by 6 way pluggable screw terminals

2.2.6 Relay Outputs

5 Amp @ 230V AC single pole change over

2.3. Autotag-P Tag Transponder AT430P

2.3.1. Electrical

Power Supply:	Replaceable 3V CR2032 lithium coin cell	
Current consumption:	Quiescent:	<5 uA
	Transmitting:	<3 mA
Battery Life:	3 years +	

2.3.2. Mechanical

Dimensions:	120 x 32 x 11 mm
Material:	ABS Plastic
Mounting:	See Mounting Instructions (Section 4.2.2)

2.3.3. Environmental

Storage Temperature:	- 40°C to +85°C
Operating Temperature:	-30°C to +85°C
Humidity:	98% max.
Environmental Sealing:	Sealed to IP42
Other:	UV resistant

2.3.4. RF Channel

Operating Frequency:	433.92 MHz.
Operating Range:	8m maximum, adjustable, depending on site conditions
Receiver Modulation Type:	100% AM (OOK), PWM
Receiver Modulation Frequency:	167 Hz to 250 Hz
Receiver Data Rate:	10 Bytes / sec
Transmitter Power:	30 µW
Transmit Modulation Frequency:	375 Hz & 500 Hz
Transmit Data Rate:	50 Bytes / sec
Stability:	SAW resonator referenced

2.3.5. Code

System coding:	24 bits fixed
User coding:	32 bit programmable
No. of possible codes:	Over 4 billion (2^{32}) unique codes

2.4. Autotag-P Tag with Proximity Transponder

Specifications of Proximity Transponder:

EM4002:	Compatible
Operating Frequency:	125 kHz
Range:	1 – 3 cm
Coding:	32 bit fixed (not sequential)

3. FCC REGULATIONS

When this system is used in the United States of America, only the following models may be used:

AUTOTAG-P BASE STATION MODELS			
FT Number	**Part Number**	**Voltage**	**Protocol**
708FT0233	ATR434P-C2	12-24V DC	Clock & Data / Wiegand and RS-232
708FT0234	ATR434P-C2	12-24V DC	Clock & Data / Wiegand and RS-232 (McGann)

AUTOTAG-P TRANSPONDER MODELS		
FT Number	**Part Number**	**Model**
708FT0210	AT430P	Programmable Tag
708FT0211	AT430P	Programmable Tag (McGann)

User in the United States of America.

Please note the following important caution:-

Changes or modifications to this product not expressly approved by Nortech International (Pty) Ltd, in writing, could void the user's authority to operate the product.

BASE STATION ID LABEL

{PRIVATE }Nortech International (Pty) Ltd ATR434P-C2 (708FT0233)
FCC ID: XXXXX-XXXX

Frequency: 433.92 MHz
Power: 10 mW

TAG FCC INFORMATION

{PRIVATE }Nortech International (Pty) Ltd AT43P (708FT0210)
FCC ID: XXXXX-XXXX

Frequency: 433.92 MHz
Power: 30 µW

4. OPERATING PRINCIPLES

4.1. Radio Frequency Communications: Important concepts

The Autotag-P Base Station and Tags communicate by means of radio waves. Although these are very useful, as no physical link is needed, they also have some inherent properties which need to be understood for the installation to work well.

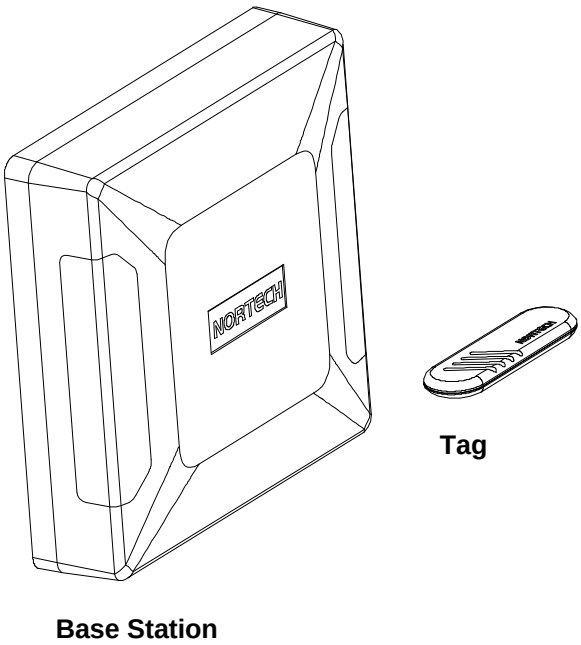

Figure 4.1: Isometric view of Base Station with Tag

4.1.1. Maximum Range

Range is defined as the greatest distance between the Base Station and the Tag, at which reliable communications can take place.

The Autotag-P unit has a guaranteed range of 8 m, influenced to a degree, by background noise levels.

Environmental conditions have a direct impact on the range:

- During business hours, man made radio frequency interference (RFI) is at it's strongest, hence reducing the effective range.
- At the Autotag-P operating frequency, wet weather tends to damp long range radio frequency propagation but has little effect on short range communications, hence increasing range.

The maximum range, therefore, will be achieved on a wet weekend night. This can typically be up to 15 m.

4.1.2. Reflection and absorption

The direction a radio wave travels (and how far it travels) can be affected by its environment. The wave tends to be **reflected** by metal surfaces and **absorbed** by other materials, when passing through them. At most sites there will be a fair amount of metal in the vicinity, in the form of re-inforcing bars in walls, air conditioning ducts, etc. For example, if a large metal sheet is placed in front of the Base Station, any Tags on the other side of the plate would most likely be unable to communicate with the Base Station and the system would not function.

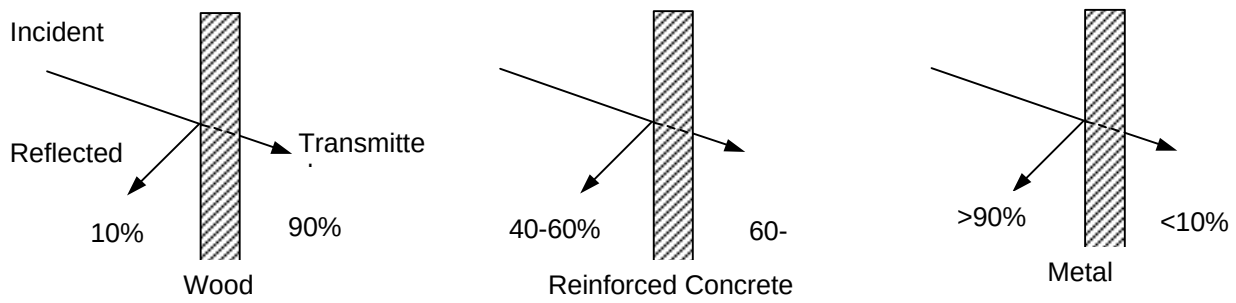

Figure 4.2. Interaction of RF Waves with various materials

4.1.3. Noding and nulls

A site which is fairly enclosed or has large reflective surfaces in the vicinity, will cause the reflections to interact with one another. At some points they will interact constructively and there will be a high energy concentration and at other points the interaction will be negative, resulting in a lower energy concentration.

These ‘lows’ are called nulls, and are points at which the Tags may not receive signals from the Base Station.

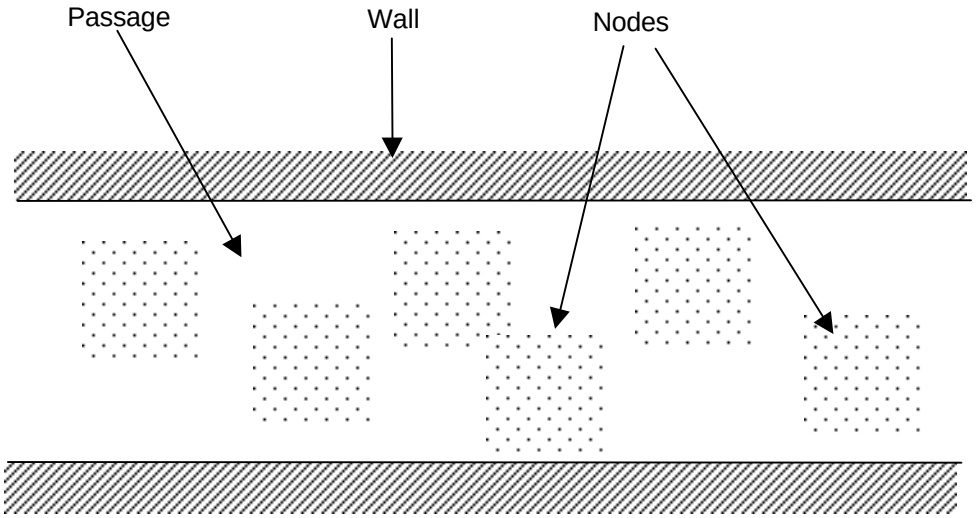

Figure 4.3. Distribution of nulls in a confined area

For the Autotag-P unit these nulls will generally be very localised, ie. covering an area of a few tens of centimetres. A moving vehicle will pass through several peaks and nulls when within range. Transmission will therefore take place whenever a ‘peak’ has been encountered. During commissioning, as one moves about the vicinity of the Base Station, this phenomenon can be noticed.

NOTE: The pattern of nulls may be significantly changed by repositioning the Base Station or even simply angling the unit. For example, where a null covers a relatively large part of the operational zone, repositioning of the Base Station may be required.

4.1.4. Radiation pattern

The Base Station unit is designed to ensure that the RF waves are transmitted radially outwards, primarily in the direction of the front face of the unit. (In more scientific terms: there is a main lobe of radiation perpendicular to the front face.) Tags will therefore operate at maximum range when directly facing the Base Station unit. The lobe is fairly broad and will therefore work over a wider angle of coverage than simply directly in front of the unit.

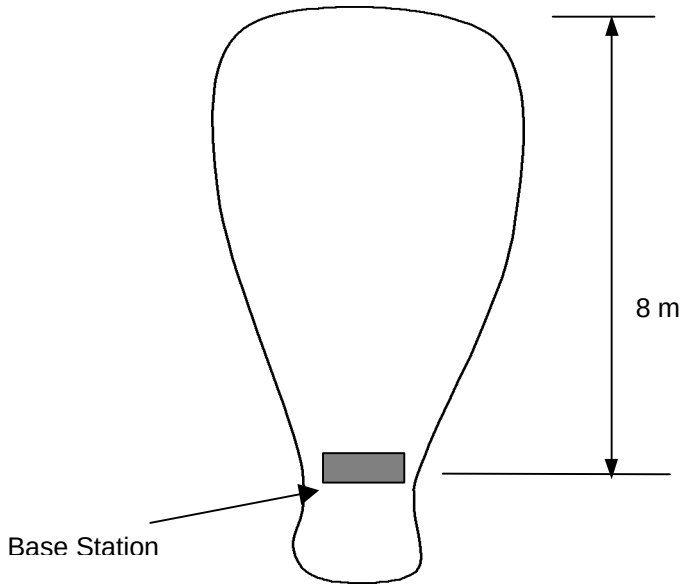

Figure 4.4. Radiation pattern of Base Station

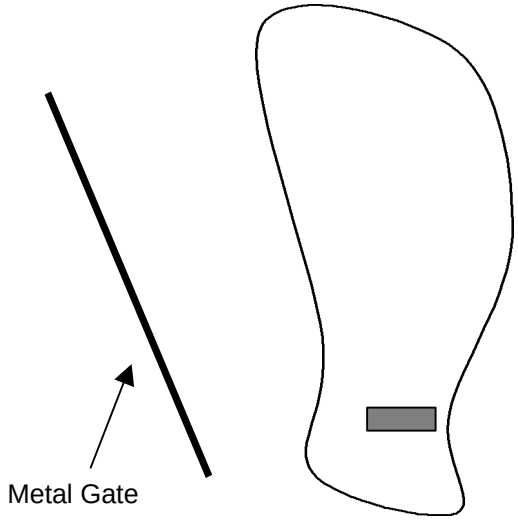

Figure 4.5. Influence of nearby metal object on pattern

(This was done to give the unit a degree of directionality, so that one could ‘aim’ it in the required direction.)

Due to the nature of RF, this lobe is not very defined and its shape may change, depending on the local environment. For example, if the unit is positioned close to a metal gate (see Figure 4.5) the lobe will tend to bend towards it. If one is situated in an enclosed area, the radio waves tend to reflect off the enclosing walls, and they set up nodes and nulls in the area. As stated earlier, this will not significantly compromise operation, as the nulls will tend to cover small areas, each surrounded by an area of good signal strength. The most important point here is that the lobe shape has now changed considerably and become more unpredictable. For example, one may now be able to detect a Tag 3 to 5 metres behind the unit.

Summary of important points about RF:

- RF is unable to penetrate most metals. (For example, talking to someone in a room with metal walls over a hand held radio is impossible. RF can however go around the walls.)
- RF may be reflected by walls and other structures, especially those with metal reinforcing.
- RF becomes weaker with distance.

4.2. Autotag-P Communications Architecture

Communication between the Tag and Base Station takes place as follows:

As stated in the Introduction (Section 1.) there are two ways of configuration. These depend on site conditions and requirements in terms of functionality.

1. An arming input is provided. This is a relay input and the triggering device could be a loop detector, mass detector or some similar device. This allows for triggering of the Base Station only when a vehicle is present. The Base Station is then only transmitting at such times. The advantages of using this are:
   - It reduces the chance of false triggering (eg. by a pedestrian walking past with a Tag).
   - The intermittent transmission reduces possible interference with other devices that may be operating at the same frequency in the vicinity.
   - The time-averaged radiation from the device is greatly reduced. This may in some cases be important for compliance with local EMC regulations.

2. Should the arming input not be used, the Base Station will continually transmit a signal. The advantages of this are:
   - The Tag is triggered as soon as it comes within range, and sensitivity to nulls is reduced.
   - The loop or other triggering device is made redundant, reducing the system and installation costs.

The following applies to both configurations:

The Base Station transmits a signal to any Tags within range. The Tag is activated by this signal. It then checks to see that it is actually a Base Station that has woken it up. It does this by decoding the code that was transmitted. Once satisfied, it then transmits its own 32 bit code. The code is received and checked for integrity by the Base Station and then passed on to the control system via the communications connector.

4.3. Coding

The coding in the Autotag-P system is split into the following sections:

32 bit User Data (Tag only)
16 bit Installer code
8 bit Distributor / OEM code
32 bit mask (Base Station only)

4.3.1 32 Bit User Data (Tag only)

The 32 bit User Data can be programmed into the Base Station and Tag using the Autotag-P Programming Station. The 32 bits of User Data can be programmed in any combination of site code bits and card number bits to match the access controller's requirements.
This feature makes the Autotag-P system very flexible, enabling configuration to most access controllers.

For more information on Programming the 32 bit user data, refer to the Autotag-P Programming Station User Manual Document Number 708UM0201.

The Autotag-P Tags are shipped from the factory with the 32 bit User Data set to the Tag's serial number.

4.3.2 16 Bit Installer Code

As the 32 bit User Code is programmable, there is a possibility that two Tags from different installation will have the same code, hence allowing access to the other site.
Therefore the introduction of the Installer code. This 16 bit code allows for 65535 Installer codes for each Distributor code. The Distributor, programs this code into the Autotag-P Base Station and Tags for the Installer, using the Autotag-P Programming Station. The 16 bit Installer code in the Base Station and Tag must match before the Base Station sends the 32 bit User Data to the access controller. The Autotag-P Base Station and Tags are shipped from the factory with the 16 bit Installer code set to "00000" (the default Installer code).

4.3.3 8 Bit Distributor / OEM Code

The 8 bit Distributor / OEM code allows for 255 Distributor / OEM codes. This code is programmed in to the Autotag-P Base Station and Tags by the Distributor / OEM using the Autotag-P Programming Station. The 8 bit Distributor / OEM code in the Base Station and Tag must match before the Base Station sends the 32 bit User Data to the access controller. The Autotag-P Base Station and Tags are shipped from the factory with the 8 bit Distributor / OEM code set to "000" (the default Distributor / OEM code).

4.3.4 32 Bit Mask (Base Station Only)

This is an advanced feature and it is recommended that this section is left at "0000000000". If any bit of this 32 bit Mask is set, the corresponding bit of the Tag's 32 bit User Data must also be set.

4.4 R.F. Communications between Base Station and Tag

The communications between Base Station and Tag are split into the following sections:

Poll:	From Base Station
Response:	From the Tag
Acknowledge:	From the Base Station

4.4.1. Poll from the Base Station

The Base Station Polls for the Tag at regular intervals, listening for a response from a Tag between each Poll. The "Poll" contains the following: Poll command, Base Station ID and a Check Digit.

4.4.2 Response from the Tag

On receiving a Poll from the Base Station, the Tag checks the Poll message against the Check Digit. If it is a valid Poll the Tag returns a response message using the Base Station ID from the Poll message. The "Response" contains the following: Response Command, Base Station ID, Distributor Code, Installer Code, 32 Bit User Data and a Check Digit.

4.4.3 Acknowledge from the Base Station

On receiving a response from a Tag, the Base Station checks the response message against the Check Digit. If it is a valid Response Message, the Base Station checks the " Base Station ID" in the response message against it's own Base Station ID to see if the message has not been sent from a Tag associated with another Base Station. If the Base Station ID's match, the Base Station sends out an Acknowledge Message. The "Acknowledge" contains the following: Base Station ID, the 12 least significant bits of the Tag's 32 bit User Data and a Check Digit.

On receiving the Acknowledge Message, the Tag checks the integrity of the message and that it is an acknowledgement to it's response message. If all match, the Tag goes to sleep, for typically 7 seconds (min 3.5 sec, max 11.5 sec). This sleep period reduces the Tags power consumption and allows other Tags in range to communicate with the Base Station. If the Tag goes out of range of the Base Station, it

will power down. Coming back into range will reinitiate the entire communication sequence.

4.5. Communication Protocol Options

There are four communications options available:

Wiegand – 34 or 26 Bit
Clock&Data – 10 or 8 Digit BCD
RS-232 – Autotag-P Point-to-point Protocol
RS-485 – Nortech Multi-drop Protocol

There are two basic communication models either the 708FT023X models or the 708FT024X models (where 'X' is the power supply option)

The 708FT023X models have the "**RS-232 Autotag-P Point-to-point Communication Protocol**". Where as the 708FT024X models have "**RS-485 – Nortech Multi-drop Communication Protocol**"

The 708FT023X models come standard with both **Wiegand** and **Clock&Data** communications protocols.

The selection between either **Wiegand** or **Clock&Data** is via DIP Switch SW1-3

Other communication protocols are available on special request.

4.5.1 Wiegand Communication Protocol

Refer to section 5.3.1 for switch locations and settings.

This is a unidirectional protocol (from the Autotag-P Base Station to the Access Controller).

One of two versions of this protocol can be selected. Either 34 bit or 26 bit Wiegand. The default is 34 bit Wiegand. To select 26 bit Wiegand switch **OFF** switch SW2-2. To revert back to 34 bit Wiegand switch **ON** switch SW2-2.

For 34 bit Wiegand Protocol (SW2-2 and SW2-3 **ON**), (being the preferred version of this protocol). The 32 bit unique code from the Autotag-P Tag is sent out with the addition of two parity bits

For the 26 bit Wiegand protocol (SW2-2 **OFF** and SW2-3 **ON**). The 32 bit unique code from the Autotag-P Tag has the eight most significant bits striped off and the resultant 24 bits are sent out with the addition of two parity bits

4.5.2 Clock&Data Communication Protocol

Refer to section 5.3.1 for switch locations and settings.

This protocol is also known as "Magnetic Stripe Track 2."

This is a unidirectional protocol (from the Autotag-P Base Station to the Access Controller).

One of two versions of this protocol can be selected. Either 10 digit or 8 digit Clock&Data. The default is 10 digit Clock&Data. To select 8 digit Clock&Data, switch **OFF** switch SW2-2. To revert back to 10 digit Clock&Data switch **ON** switch SW2-2.

For 10 Digit Clock & Data Protocol (SW2-2 **ON** and SW2-3 **OFF**), (being the preferred version of this protocol). The 32 bit unique code from the Tag is converted to 10 digit BCD. Each BCD digit gets its own parity bit. The resultant digits together with a message header and footer are used to calculate the message check digit.

For 8 Digit Clock & Data protocol (SW2-2 **OFF** and SW2-3 **OFF**). The 32 bit unique code from the Tag is converted to 10 digit BCD. The two most significant BCD digits are discarded. Each of the remaining eight BCD

digits gets its own parity bit. The resultant digits together with a message header and footer are used to calculate the message check digit.

4.5.3 RS-232 – Autotag-P Point-to-point Communication Protocol

Refer to section 5.3.1 for switch locations and settings.

This is a unidirectional protocol where the unique code read from the Autotag-P Tag is sent out on the RS-232 transmit line.

Data Format: 8 data bits
No parity
One stop bit
Switch selectable: 1200 and 9600 baud

The 32 bit unique code from the Autotag-P Tag is converted to 10 digit BCD. These ten BCD digits are then converted to ten ASCII digits. The ten ASCII digits are sent out with a Carriage Return Line Feed (CRLF) terminator.

The total length of the communications wires is limited to 10 meters (30 feet)

4.5.4 RS-485 – Nortech Multi-drop Communication Protocol

This is a bi-directional multi-drop protocol where up to 32 Autotag-P Base Stations and one Access Controller can be connected to the same two communication wires.

The Access Controller polls each Base Station in turn to check if the Base Station has any information. When it's the Autotag-P Base Station's turn the unique code read from Autotag-P Tag is sent to the Access Controller.

Data Format: 8 data bits
No parity
One stop bit
Switch selectable: 1200 and 9600 baud

The 32 bit unique code from the Autotag-P Tag is converted to 10 digit BCD. These ten BCD digits are then converted to ten ASCII digits. The ten ASCII digits together with a Carriage Return Line Feed (CRLF) terminator are only sent out when requested to do so by the Access controller.

The total length of the communications wires is limited to 1200 meters (4000 feet).

5. INSTALLATION

5.1. Base Station

5.1.1 General description

The Base Station is a robust, weatherproof device capable of being mounted outdoors and of handling wide temperature / humidity ranges (-40°C to +70°C, 0 - 98% rel. humidity). The casing is constructed of an ABS plastic, which is impact- and UV-resistant. An O-ring seal is incorporated to ensure minimal ingress of water and dust. Cable access is via two knockouts, one in the centre of the base for mounting on a goose neck, and one slightly off-set and lower down, for wall mounting. Access to the electronics is via screws hidden behind clip-in panels on the front cover.

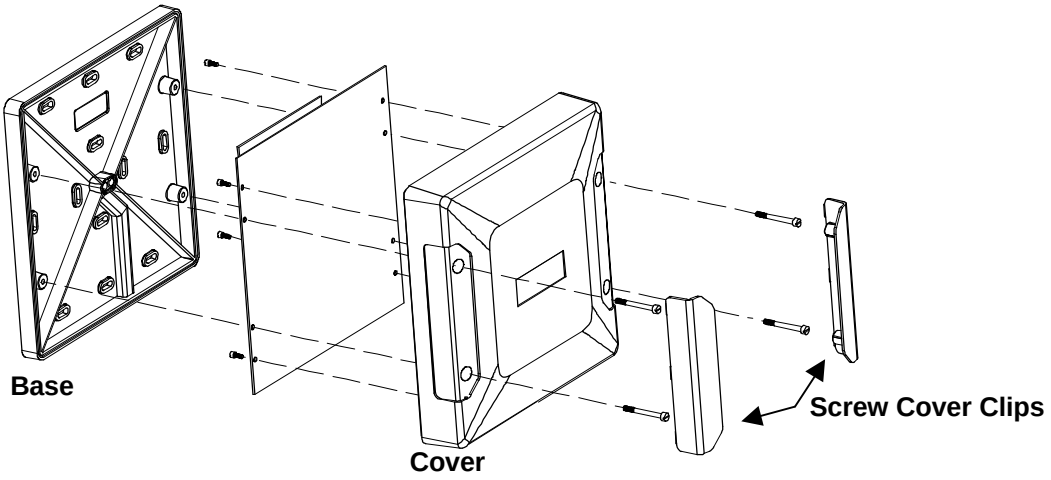

Figure 5.1. Base Station: Exploded View

The Base Station has been designed so that all electronics are recessed into the cover.
This feature allows for issuing the housing Base for mounting, eliminating the risk of damage during installation. Use of pluggable screw terminals allows for the cabling to be completed before plugging in the electronics, further reducing the risk of damage to the electronics.

5.1.2. Autotag-P Base Station Packing List

1 x Housing Base
1 x Cover (with electronics fitted)
1 x Installation Instruction Leaflet
1 x Accessory Pack, containing:
- 2 x Screw Cover Clips
- 4 x Allen Cap Screws (M4 x 35)
- 1 x Allen Key
- 2 x 6 Way Pluggable Screw Terminals
- 1 x 5 Way Pluggable Screw Terminals
- 1 x 3 Way Pluggable Screw Terminals (mains version only)

5.1.3. Installation

The unit may be wall, pole or gantry mounted. The height of the mount should be equivalent to the average vehicle window height. The unit must be positioned so that it 'looks into' the vehicle.

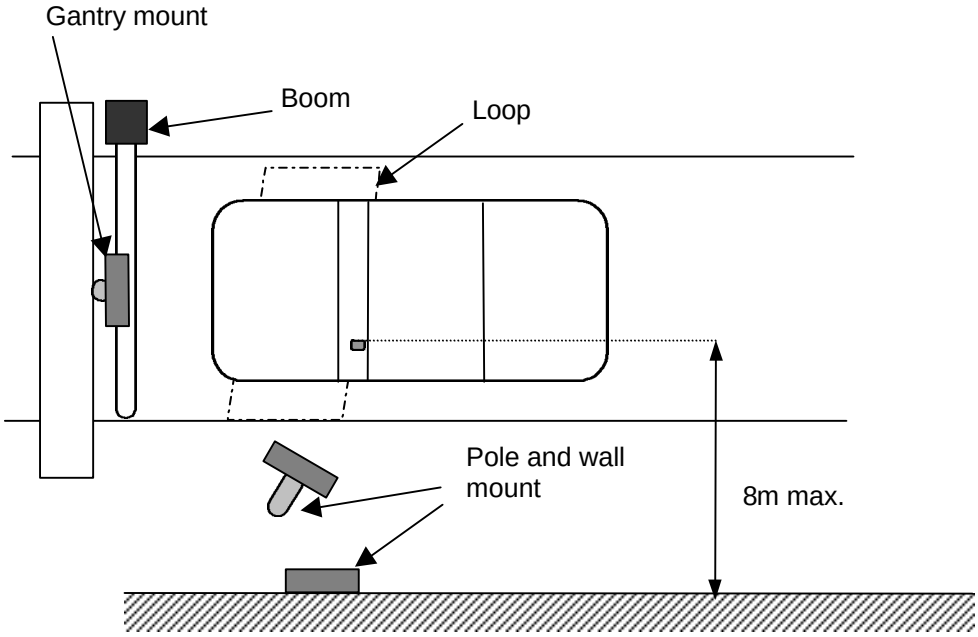

Figure 5.2. Positioning

Wall mounting:

Wall mounting is possible when the wall is within the specified range of the vehicles to be monitored. The presence of metal re-enforcing in the wall has negligible effect on the operation of the Base Station.

1. Determine the area in which the unit must detect. The Base Station unit should be placed roughly in the middle of this area (Figure 5.2)
2. Unclip the two screw covers and remove front cover via screws.
3. Knockouts are provided on the base (Figure 4.1). Remove the appropriate knockouts, including that of the cable access hole.
4. Route power and communications cables through the cable access hole.
5. Bolt base to wall via knockouts.
6. Connect cables according to wiring diagram in Section 5.1.
7. **Before applying power:** Set the DIP switches according to the type of installation required. If the 'triggered' setting is to be used, ensure the arming input is connected and that the trigger system (eg. loop detector) is functioning.
8. Apply power. The RED LED should be illuminated.
9. Holding a Tag in front of the unit should cause the GREEN LED to light up for a second at a time. This indicates that the Base Station is receiving the code from the Tag.

NB: The Circuit Board does NOT need to be unscrewed from the front cover at any point. Doing so will result in the warranty being voided.

Pole or gantry mounting:

1. When mounting on a pole, refer to the dimensions and recommended minimum size on the goose neck mounting plate drawing in Appendix B.
2. A hole in the centre of the flange with a diameter of 30 mm will allow for hidden cable access.
3. Ensure that the unit faces the window area of the vehicles to be monitored.
4. Mounting instructions are the same as for the above.

5.1.4. Wiring

Refer to Section 6.1 for connector Pin assignment and to Appendix A for additional information.
Refer to section 5.3.1 for switch locations and settings.

5.1.4.1 Connecting the Base Station to a controller:

Wiegand: Connect the following lines: CN7 Pin 4 (DATA0), CN7 Pin 3 (DATA1) and CN5 Pin 1 (GND) to the corresponding terminals on the controller. Ensure that switch SW2-3 is **ON**.

Clock & Data: Connect the following lines: CN7 Pin 4 (Clock), CN7 Pin 3 (Data), CN7 Pin 2 (Card Present) and CN5 Pin 1 (GND) to the corres-ponding terminals of the controller. Ensure that SW2-3 is **OFF**.

RS-232: This feature is only available on the RS-232 model. Connect CN7 Pin 5 (RS-232 TX) to the receive pin of the controller. Connect CN7 Pin 6 (RS-232 RX) to the transmit pin of the controller. Connect CN5 Pin 1 (GND) to the signal GND Pin of the controller.

RS-485: This feature is only available on the RS-485 model. Connect the following lines: CN7 Pin 6 (RS-485 A), CN7 Pin 5 (RS-485 B) and CN5 Pin 1 (GND) to the corresponding terminals of the controller. Ensure that each Base Station has a unique address by setting switches SW1-1 through SW1-5.

5.1.4.2 Connecting the Base Station to a triggering device:

This is done when the Base Station is to operate in ‘Triggered’ mode. A vehicle detector positioned directly in front of the Base Station unit is used to trigger operation.

The vehicle detector can be a loop detector, capacitive detector or any other unit capable of providing a CONTINUOUS relay closure whilst a vehicle is present. In the case of a loop detector this requires that the unit is configured for PERMANENT PRESENCE.

Connect CN7 Pin1 to the N/O relay output of the triggering device, and CN5 Pin 1 of the screw terminal block to the RELAY COMMON connection of the triggering device.

5.1.4.3 Operating multiple Base Stations in proximity to one another:

When two or more Base Station units are operated in proximity to one another they may cause mutual interference if not synchronised. Synchronisation ensures that their transmissions do not interfere with one another. To synchronise the units, connect the SYNC lines CN5 Pin 6 and GND CN5 Pin 1 on the 6-pin power connectors to the corresponding pins on all units (ie. Pin 6 to Pin 6, Pin 1 to Pin 1).
(Refer to section 6.1)

In addition to the SYNC function, the Base Station also has Base Station ID switch settings. When several units are operating on the same site, setting different ID’s for each unit ensures that they only receive codes from the Tags that they themselves have actuated. That is, Base Station ‘A’ will not receive the code from a Tag actuated by Base Station ‘B’. See Section 4.3.1 for more information.

5.2 Tag

5.2.1. General description

The Tag is an active transponder designed to communicate with an Autotag-P Base Station unit. The Tag is triggered by the Base Station when within range and transmits a unique code back. It is available in an impact- and UV-resistant nylon-based housing. It operates over a temperature range of -30°C to +85°C and has a minimum working life of 3 years. (Replacement battery CR2032 3V lithium coin cell Nortech P/No MIE040001). It is recommended that an optional **Tag holder (708MD0012),** which allows for the removal of the Tag from the vehicle, be used to hold the Tag in position on the windshield (windscreen).

NB: Immersion of the Tag in liquid or interfering with the interior electronics will result in the warranty being voided.

5.2.2. Positioning

For reliable operation the Tag should be positioned on the side of the vehicle closest to the Base Station. If, on entry or exit, the Base Station is on opposite sides of the vehicle position the Tag at the centre of the windshield behind the rear-view mirror (see Figure 1). Ensure that the driver's field of view is not obstructed.
The Tag is NOT to be placed on the exterior of the vehicle.

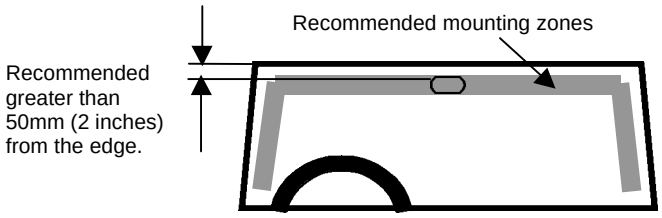

Figure 5.3. Tag placement on windshield (viewed from inside).

Factors influencing selection of the Tag mounting position:

The main factor affecting performance is the proximity of metal or other conducting material (such as the human body). For example, many dashboards are made of metal and covered with a thin synthetic foam/rubber layer. If the Tag were placed on this it would not operate. Likewise, if placed in a person's shirt pocket operation could also not be guaranteed.
Also, if it were placed further within the car (instead of on the windscreen) the metal shell (of the car) will act as a shield, possibly preventing communication with the Base Station.

5.2.3 Mounting

- Use double sided mirror tape to mount the Tag or the optional holder.
- Ensure that the windscreen is thoroughly clean and dry, being free of any oil or grease.
- Remove the backing from the adhesive tape on the Tag or the optional holder and press firmly in place.
- If the optional Tag holder is used, insert the Tag into the holder.

5.3. Base Station Configuration Options

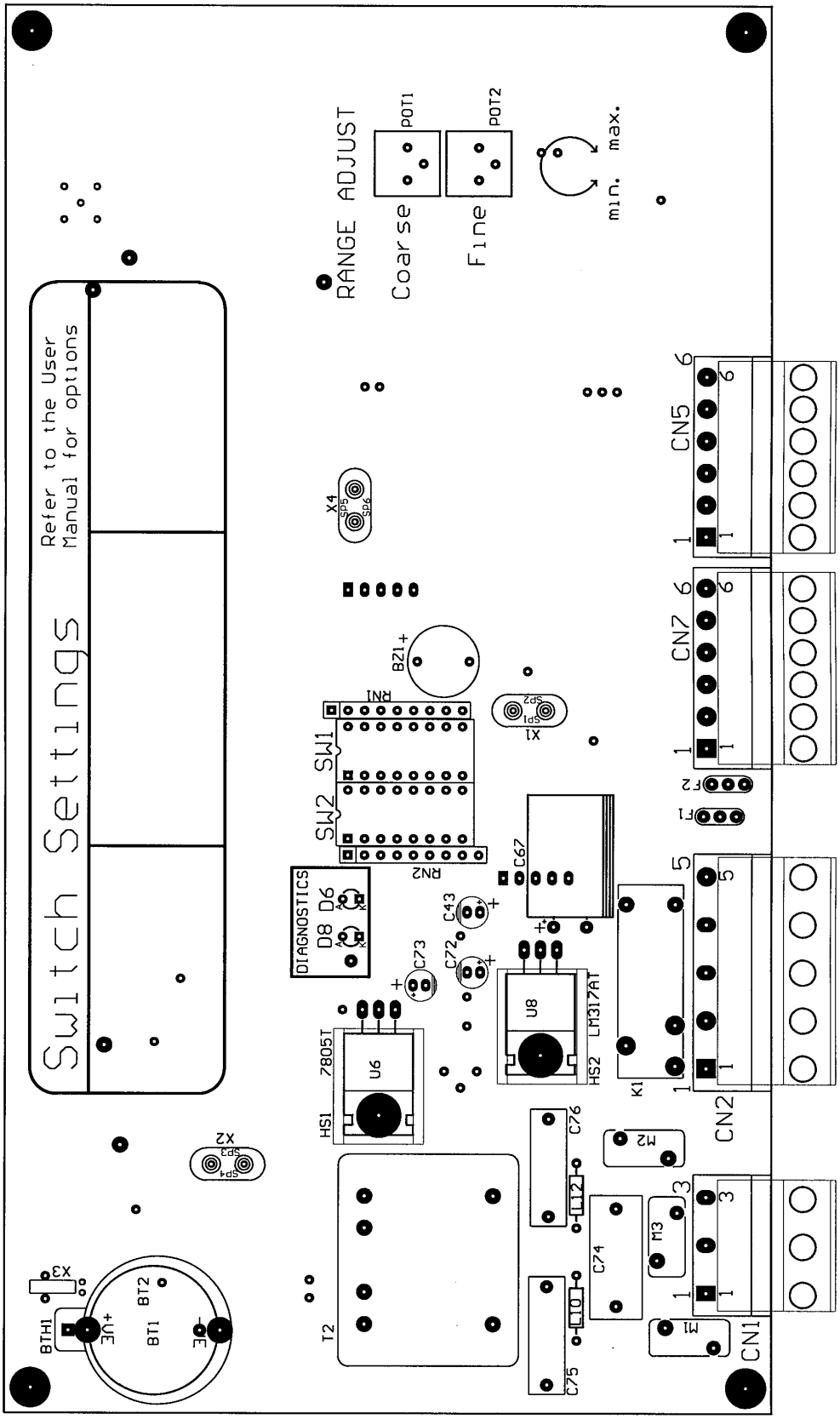

Figure 5.4. Layout of Main board

Refer to the Main Board Layout (Figure 5.4) for the following:

5.3.1 Base Station DIPSwitch settings:

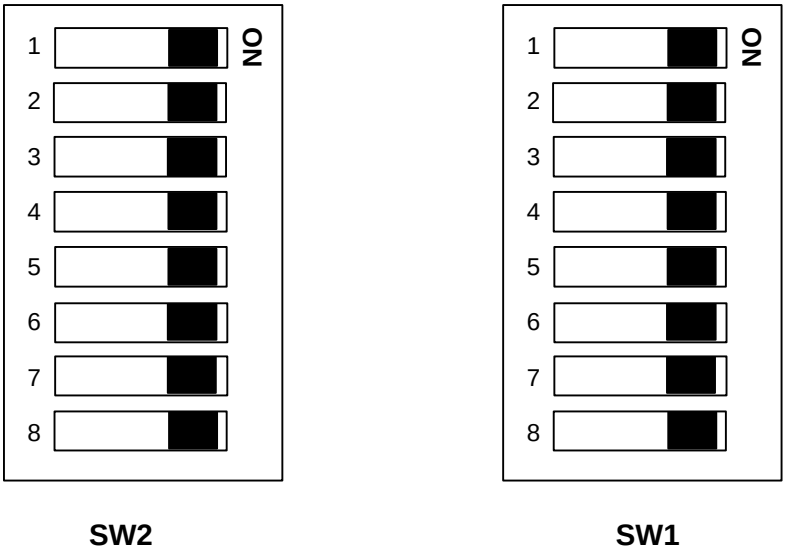

Figure 5.5: Picture of DIP Switches as seen on Base Station

With reference to Figure 5.5 the following options are presently available:

Switch 2:

SW2-1	***Buzzer***	
	ON	Enable
SW2-2	***Comms Length***	
	ON	34 Bit/10 Digit
	OFF	26 Bit / 8 Digit
SW2-3	***Protocol***	
	ON	Wiegand
	OFF	Clock & Data
SW2-4	***RS-232 / RS-485***	
	ON	RS-232
	OFF	RS-485
SW2-5	***Baud Rate***	
	ON	9600
	OFF	1200
SW2-6	***Multiple Read***	
	ON	Enable
	OFF	Disable
SW2-7	***Mode of Operation***	
	ON	Triggered
	OFF	Continuous
SW2-8	***LED Control***	
	ON	Controlled by access controller
	OFF	Controlled by Base Station

Switch 1:

If an address switch is **ON** this represents a binary **ZERO** if the switch is **OFF** this represents a binary **ONE**.

Address/ID	SW1-5	SW1-4	SW1-3	SW1-2	SW1-1
0	ON	ON	ON	ON	ON
1	ON	ON	ON	ON	OFF
2	ON	ON	ON	OFF	ON
3	ON	ON	ON	OFF	OFF
4	ON	ON	OFF	ON	ON
5	ON	ON	OFF	ON	OFF
6	ON	ON	OFF	OFF	ON
7	ON	ON	OFF	OFF	OFF
8	ON	OFF	ON	ON	ON
9	ON	OFF	ON	ON	OFF
10	ON	OFF	ON	OFF	ON
11	ON	OFF	ON	OFF	OFF
12	ON	OFF	OFF	ON	ON
13	ON	OFF	OFF	ON	OFF
14	ON	OFF	OFF	OFF	ON
15	ON	OFF	OFF	OFF	OFF
16	OFF	ON	ON	ON	ON
17	OFF	ON	ON	ON	OFF
18	OFF	ON	ON	OFF	ON
19	OFF	ON	ON	OFF	OFF
20	OFF	ON	OFF	ON	ON
21	OFF	ON	OFF	ON	OFF
22	OFF	ON	OFF	OFF	ON
23	OFF	ON	OFF	OFF	OFF
24	OFF	OFF	ON	ON	ON
25	OFF	OFF	ON	ON	OFF
26	OFF	OFF	ON	OFF	ON
27	OFF	OFF	ON	OFF	OFF
28	OFF	OFF	OFF	ON	ON
29	OFF	OFF	OFF	ON	OFF
30	OFF	OFF	OFF	OFF	ON
31	OFF	OFF	OFF	OFF	OFF

Baud Rate:
This switch (SW2-5) is used to select the baud rate for RS-232 and RS-485 communications (on units supporting these options).

Data Output Protocol:
This switch (SW2-3) is used to select, either Wiegand or Clock & Data Protocol (standard on all units).

RS-485 Multidrop addressing / Base Station ID code:
DIP switches SW1-1 through SW1-5 serve two functions. For units supporting 485 communications, they allow for individual addressing of each unit. In addition, they allow each unit to ‘fingerprint’ the Tag it communicates with. This ensures that Base Station ‘A’ doesn’t receive the code from a Tag triggered by Base Station ‘B’ (as long as the two have different ID code settings).

Allowance has been made for up to 32 different RS-485 addresses and 16 Base Station ID’s.

Transmission mode:
If the Base Station is to operate without any trigger input (such as an arming loop), set the switch to ‘Continuous’. The unit will then continuously transmit its wake-up signal.

If it is to operate with a triggering device, set it to 'triggered' and ensure the device is connected (see section 4.1.3).

5.3.2 Range adjustment:

The range can be adjusted to compensate for local / site conditions and applications.
This is done via the single turn adjustment trimmers on the main board (see figure 5.4).
Note that both the COARSE and FINE trimmers are set to maximum range at the factory.
I.e: turned clockwise to the limit.

NB: Do not try to force them beyond their normal range.

5.3.3 Internal Diagnostic LED:

- Power Up: Red LED goes on to show that power is on, then the Green LED flashes twice and buzzer beeps twice.
- Normal operation: After power up red LED is on. If the B/S receives a valid ID the green LED flashes once, the buzzer beeps and on the RS-232 model the relay will pulse. On the RS-485 model the relay is controlled by the RS-485 communications.
- Fault condition: If a fault condition occurs, the red LED will flash.
- Wrong Distributor Code: The Red LED flashes OFF twice.
- Wrong Installer Code: The Red LED flashes OFF twice.
- Memory Check Sum Error: The Red LED flashes OFF three times.

5.3.4 External Indicator Drivers

Two external indicators can be connected to the Base Station. Refer to Appendix A: Wiring Diagrams, on how to connect these indicators.
Each driver has the following maximum ratings: 30V DC 100mA. If the indicators exceed these ratings, external relays must be used.
Dip Switch SW2-8 selects which device controls the external indicators. If SW2-8 is OFF the Base Station controls the indicators. If SW2-8 is ON the access controller controls the indicators via the two terminals CN5 Pins 4 & 5

5.4. Commissioning

Once the unit has been installed and is working, the following steps need to be taken.

In the case of a single unit on the site:

1. Apply power to the Base Station.
2. Set the configuration to "Continuous Transmission" (see Section 5.3.1). Adjust the two range trimmers to maximum range (see Figure 5.4).
3. Attach a Tag to a vehicle that will require access to the site. Follow the steps in Section 5.2, ensuring that the Tag is mounted in the vehicle, on the side of the windscreen that is closest to the Base Station unit.
4. Drive up to the unit. Stop the vehicle at the point where it is required that the Tag be detected.
5. Adjust the range adjustment trimmers on the internal PCB of the Base Station until the correct range is obtained. If the Base Station is detecting the Tag reliably the GREEN LED should light up once every 5 – 10 seconds. If it isn't then increase the range.

This delay is caused by the Tag going to sleep making range setting and verification a tedious operation. To speed up this task a Test Tag (708FT0214) is available. This Test Tag does not go to sleep, but responds to all valid Polls it receives.

6. Once the range has been set it is a good idea to increase it a little beyond this point to ensure that it will operate reliably under all conditions.
7. Should the unit be connected to a controller, ensure that the controller receives the code, and that the two units are configured to use the same communications protocol (ie. Wiegand, Clock & Data, etc.).
8. Finally, if required, set the transmission mode of the Base Station to “Triggered” (see Section 4.3.1).

NB: If testing the site by holding a Tag in your hand, ensure that you hold it in the middle of the Tag, between thumb and forefinger. Do not cover its ends and hold it away from your body.

In the case of multiple units being installed on a site:

1. Work as per the above instructions, testing each unit individually with the other units disconnected.
2. Ensure that the SYNC line of each unit is connected to a common line (see Section 5.1.3). Note: This is generally only important for units which are within 30m of one another.
3. Ensure that the ID settings for each unit are unique (see Section 5.3.1).
4. Where two units are within 10 m of one another, try to mount them facing away from one another. This will minimise the chance of a unit reading the wrong Tag. Optimise the range setting of each to give a reliable read without interfering with the other unit.
5. Power all units up, having set the individual operation modes of each (ie: ‘triggered’ or ‘continuous’).
6. In the case of Base Station units situated very close to one another, drive a tagged vehicle up to each unit and check whether or not it triggers the wrong Base Station. If it does, this may require pointing the units away from one another and / or reducing the range of the unit that reads incorrectly.

6. CONFIGURATION

6.1. Wiring Detail

CN7 6 Way Pluggable Screw Terminal		
PIN	**Wiegand Function**	**Clock & Data Function**
1	Triggered Input	Triggered Input (Arming)
2	Not Used	Card Present
3	DATA 1	Data
4	DATA 0	Clock
5	As per table below	As per table below
6	**As per table below**	**As per table below**

CN7 6 Way Pluggable Screw Terminal		
PIN	**RS-232 Function**	**RS-485 Function**
1	As per table above	As per table above
2	As per table above	Not Used
3	As per table above	RS-485 TX Active
4	As per table above	Not Used
5	RS-232 TX	RS-485 B
6	RS-232 TX	RS-485 A

CN5 6 Way Pluggable Screw Terminal	
PIN	**FUNCTION**
1	Signal Ground
2	External Indicator Output – Green
3	External Indicator Output – Red
4	External Indicator Input – Green
5	External Indicator Input – Red
6	SYNC

CN2 5 Way Pluggable Screw Terminal	
PIN	**FUNCTION**
1	Relay Normally Open
2	Relay Normally Closed
3	Relay Common
4	DC Power In Negative
5	DC Power In Positive

CN1 3 Way Pluggable Screw Terminal	
PIN	**FUNCTION**
1	Mains Power Live
2	Mains Power Safety Earth
3	Mains Power Neutral

7. CUSTOMER FAULT ANALYSIS

Possible problems experienced during commissioning, and their solutions:

FAULT	CAUSED BY	REMEDY
The site regularly has several vehicles queuing to enter and exit the building. The Base Station unit detects vehicles other than the first in line, or detects several vehicles at the same time.	Base Station range set too high or there is an orientation problem with the Base Station.	Reduce the range so that only the nearest vehicle is detected. If the problem persists then it is most likely an orientation problem. In situations where it is important that individual vehicles are detected in the correct order (such as pay-parking), do not mount the Base Station pointing back along the line of vehicles (such as on an overhead gantry). Rather mount it so that it faces the foremost car but is pointed away from the others. For example, mount it to the side of the lane, pointing perpendicular to the road (see the wall mount in Figure 5.2). Also, mount it as close as possible to the vehicle, and mount all Tags on the side of the windscreen closest to the Base Station. The closer the Tags are to the Base Station, the lower the range setting can be, and the lower the chance of accidentally waking the wrong Tag. NOTE: Please read Section 4, especially 4.1.3 and 4.1.4 for more information on possible problems and their solutions.
The Base Station doesn't read the Tag, or does so erratically.	The Base Station range is set too low or multiple Base Stations are not synchronised.	a) The Base Station may need to have the range increased slightly. Do so using the adjustment trimmers. It may also be that it needs to be re-oriented to face the Tags directly. Ensure that the unit is facing towards the correct area of detection. This is especially important if a triggering device is to be used. For example, in the case of a loop detector the unit must face an area directly above the loop.

		b) For installations involving multiple Base Stations per site, ensure that the SYNC and GND lines (Pins 6 & 1 on CN5 screw terminal) are commoned, and that each Base Station has a different ID setting (see Section 5.3.1).

FAULT	CAUSED BY	REMEDY
Several Base Stations read a single Tag's code simultaneously.	Multiple Base Stations with the same ID.	Ensure the ID settings are unique for each Base Station.
The Base Station reads people walking past holding their Tags.	Base Station is not being activated by a triggering device.	Ensure the Base Station is connected to a triggering device (such as a loop detector) and that SW2-7 is set to 'ON' (triggered operation). Also, try to situate the Base Station as far as possible from any pedestrian access area.
Red Diagnostics and Red external indicator flashes.	Either the Base Station or the Tag having an incorrect: 1. Distributor code. 2. Installer code.	Ensure that the Distributor and Installer codes in both the Base Station and the Tag match.

APPENDIX A – WIRING DIAGRAMMS

AUTOTAG -P BASE STATION "WIEGAND" CONNECTION DIAGRAM

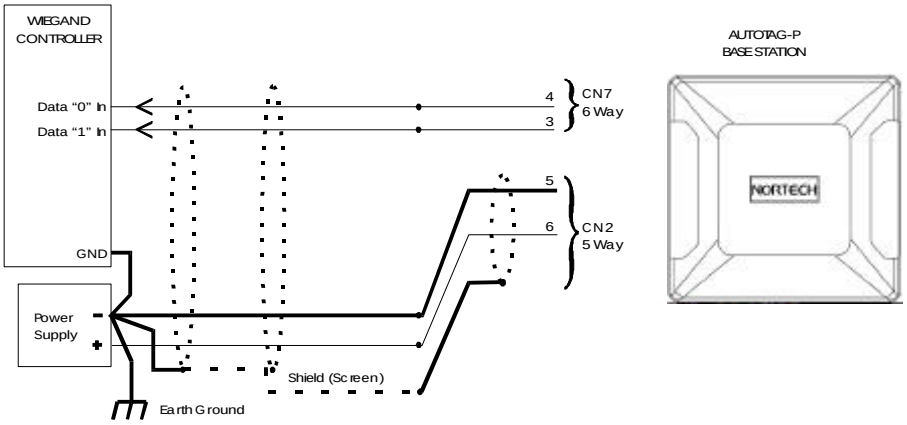

AUTOTAG -P BASE STATION "Clock & Data" CONNECTION DIAGRAM

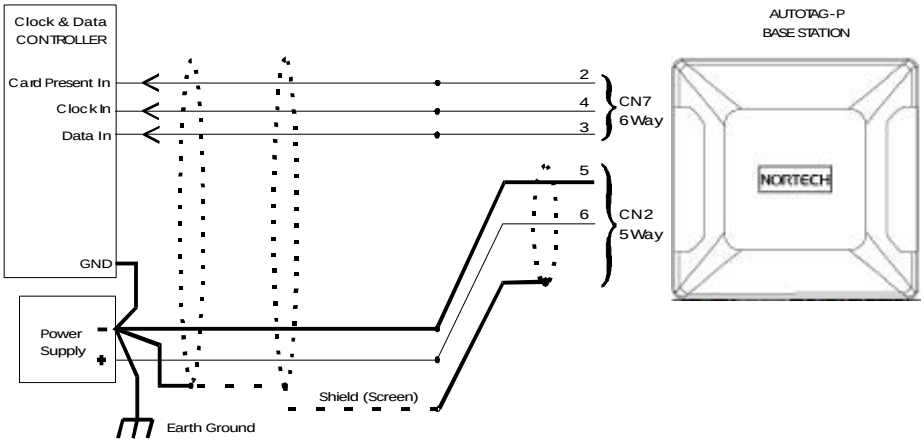

AUTOTAG-P BASE STATION "RS232" CONNECTION DIAGRAM

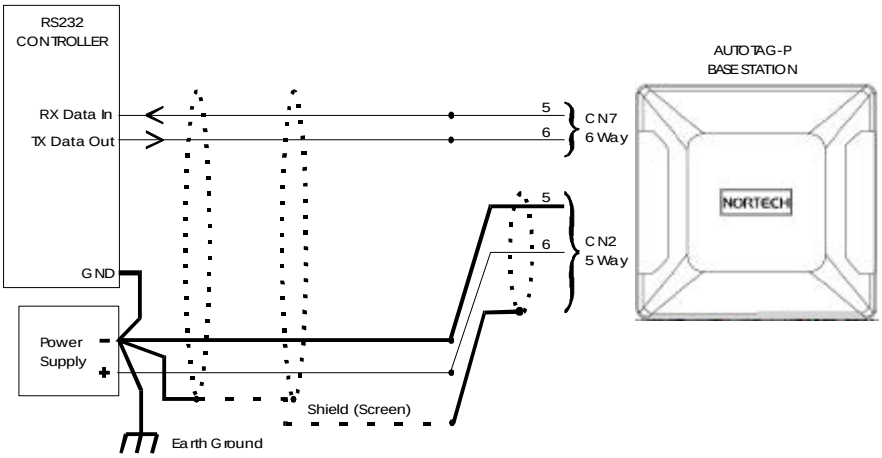

AUTOTAG-P BASE STATION "RS485" MULTIDROP CONNECTION DIAGRAM

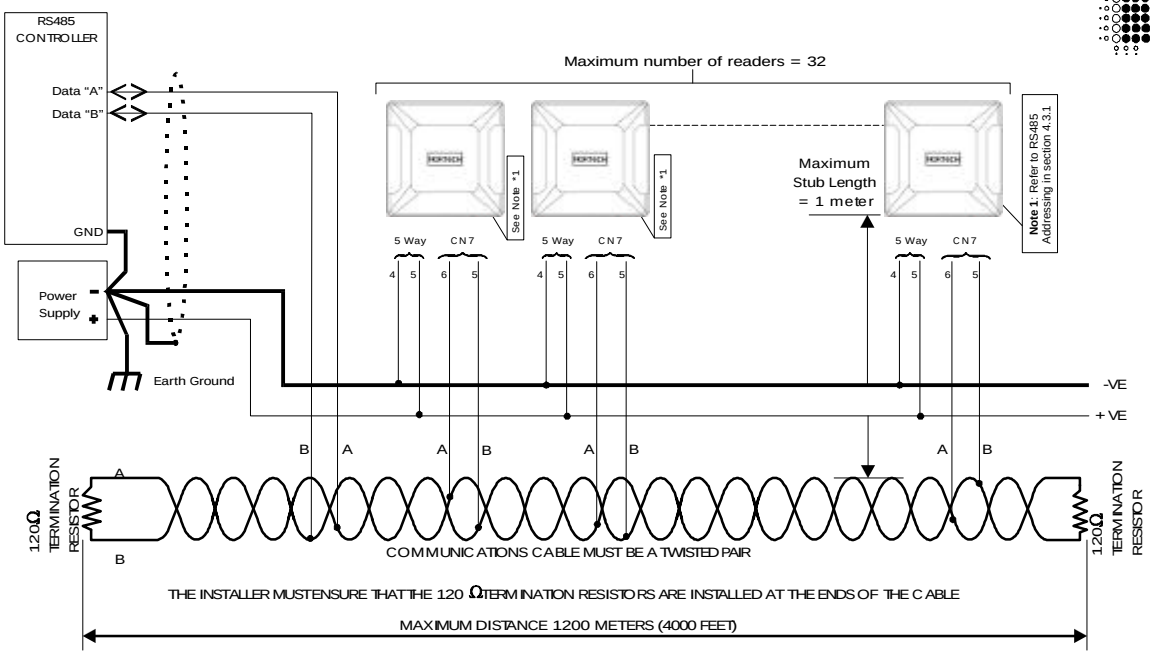

AUTOTAG-P MULTIPLE BASE STATION SYNC LINE CONNECTION
MAX SIXTEEN BASE STATIONS
(NB: Each base station **MUST** have a different ID)

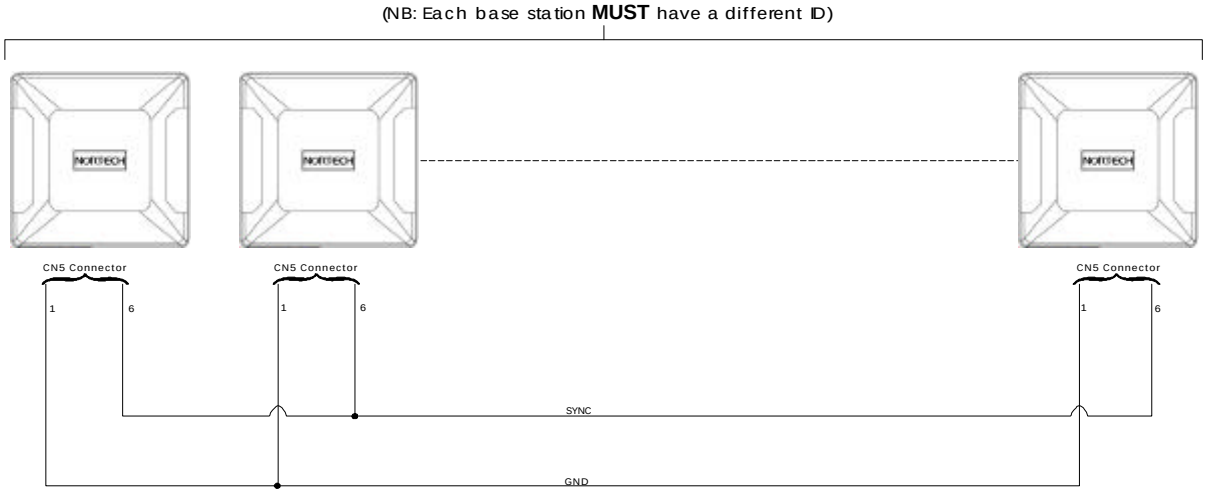

AUTOTAG-P BASE STATION TYPICAL TRIGGER CONNECTION DIAGRAM
(The trigger (arming) input is to selectively enable the base stations polling)

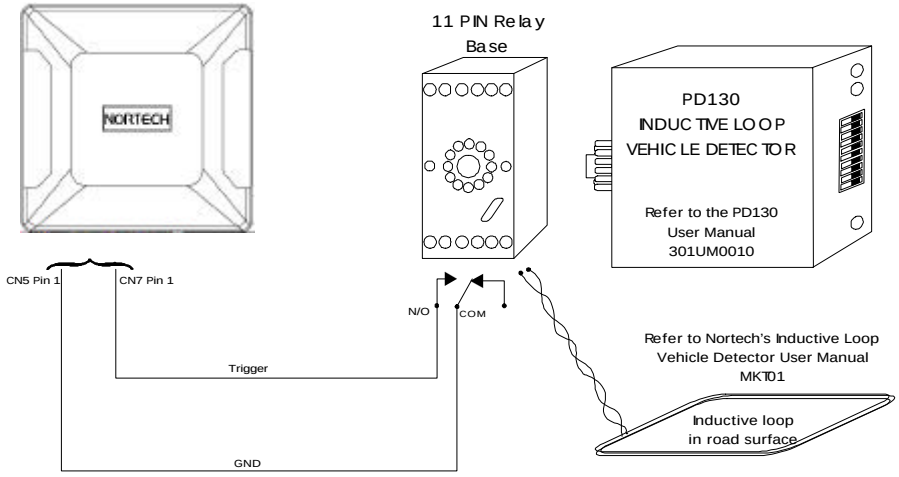

CONNECTING EXTERNAL INDICATORS

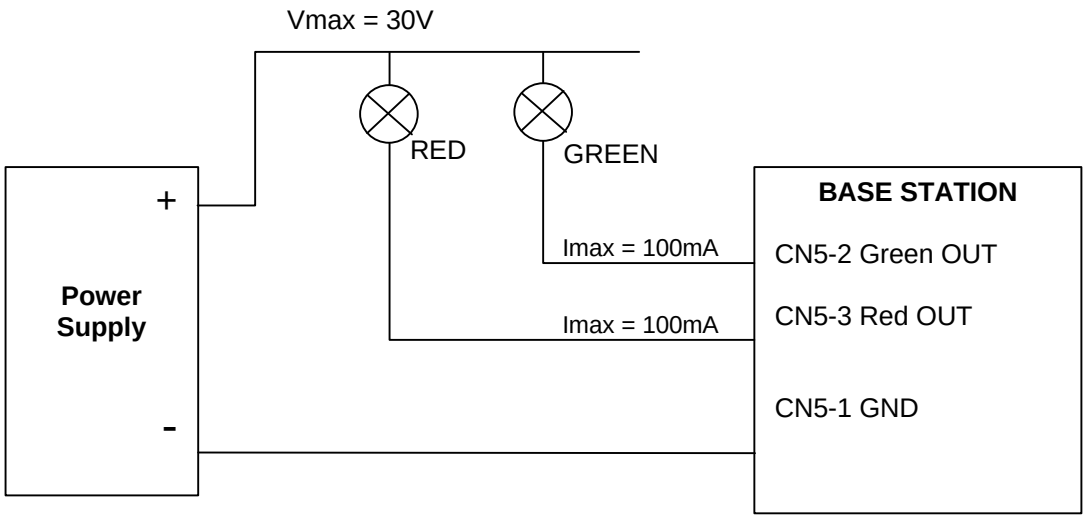

DRIVING THE EXTERNAL INDOCATORS FROM AN ACCESS CONTROLLER

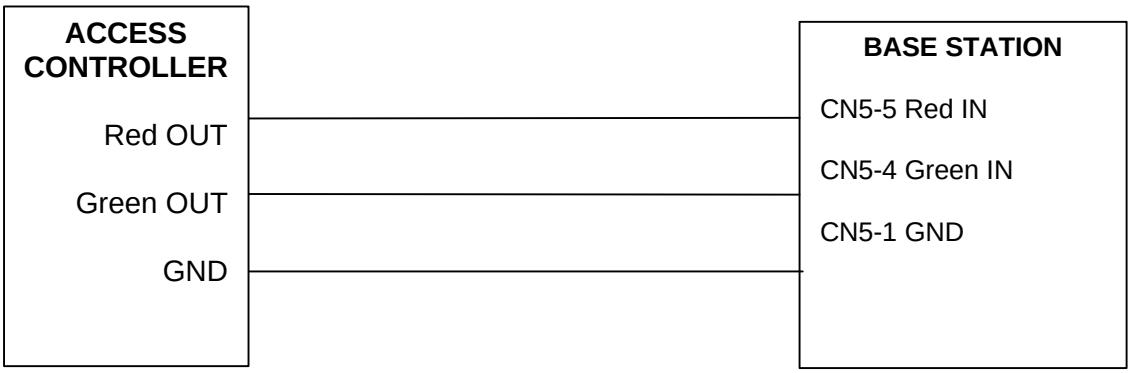
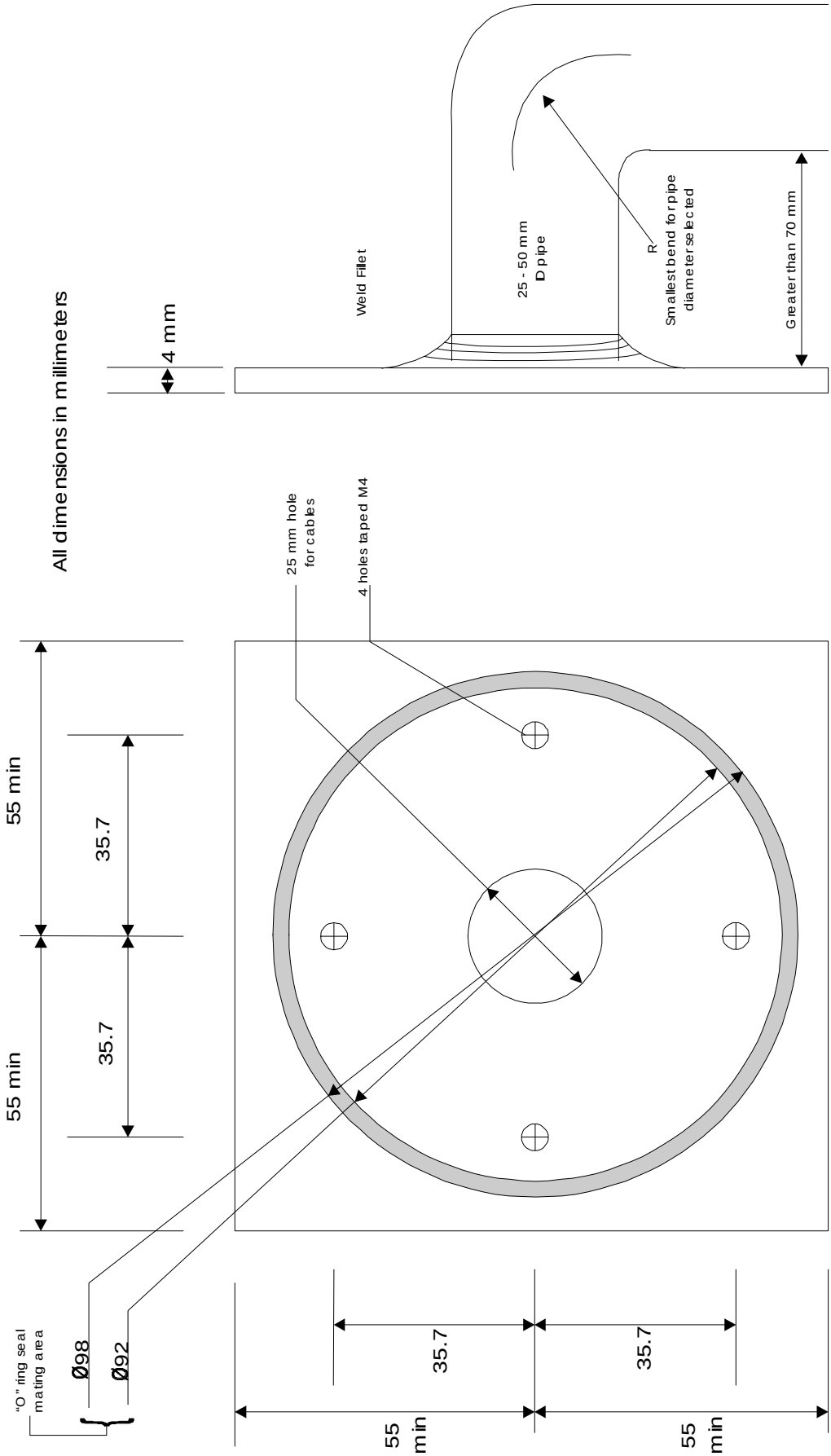
APPENDIX B – GOOSENECK MOUNTING PLATE