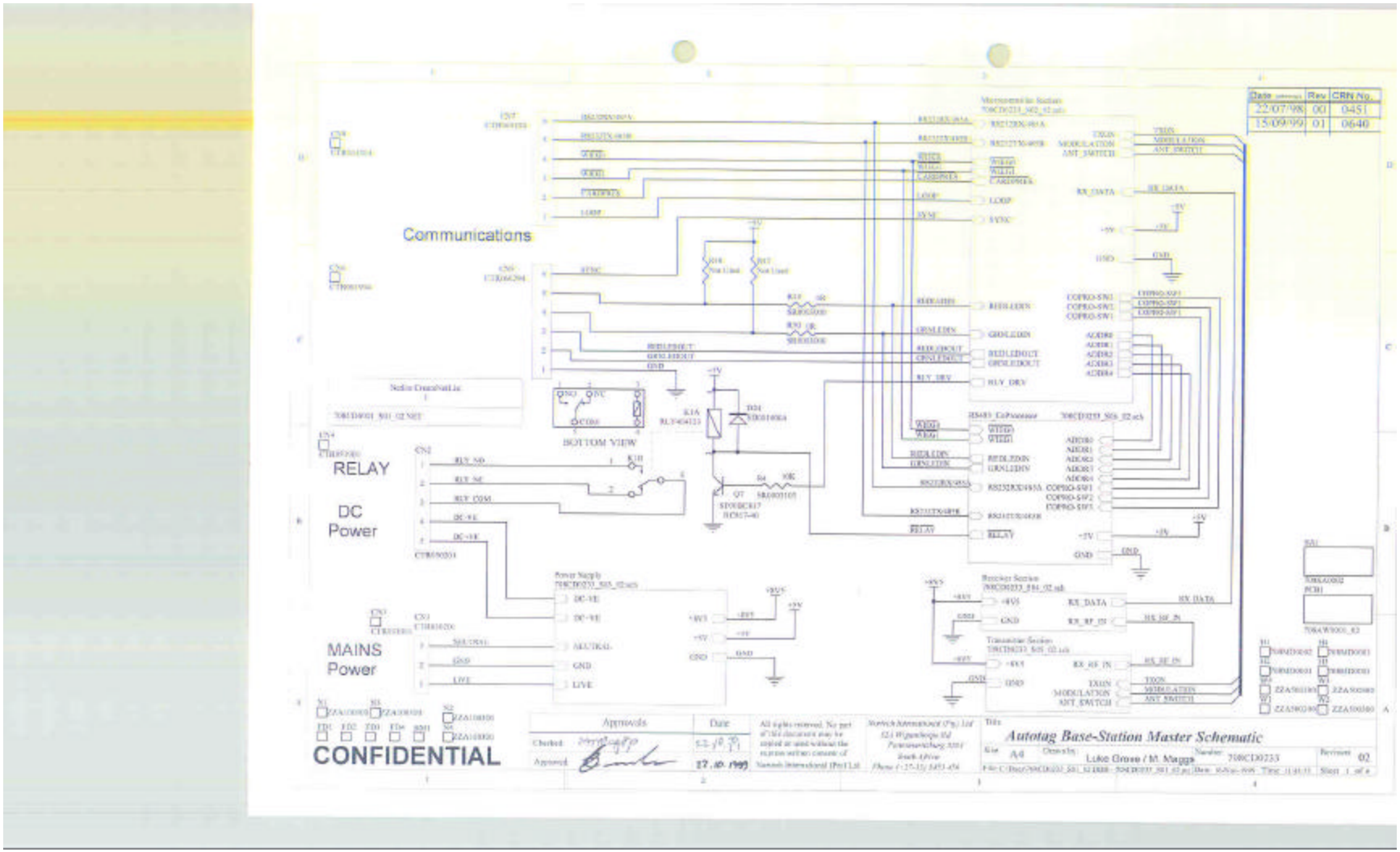
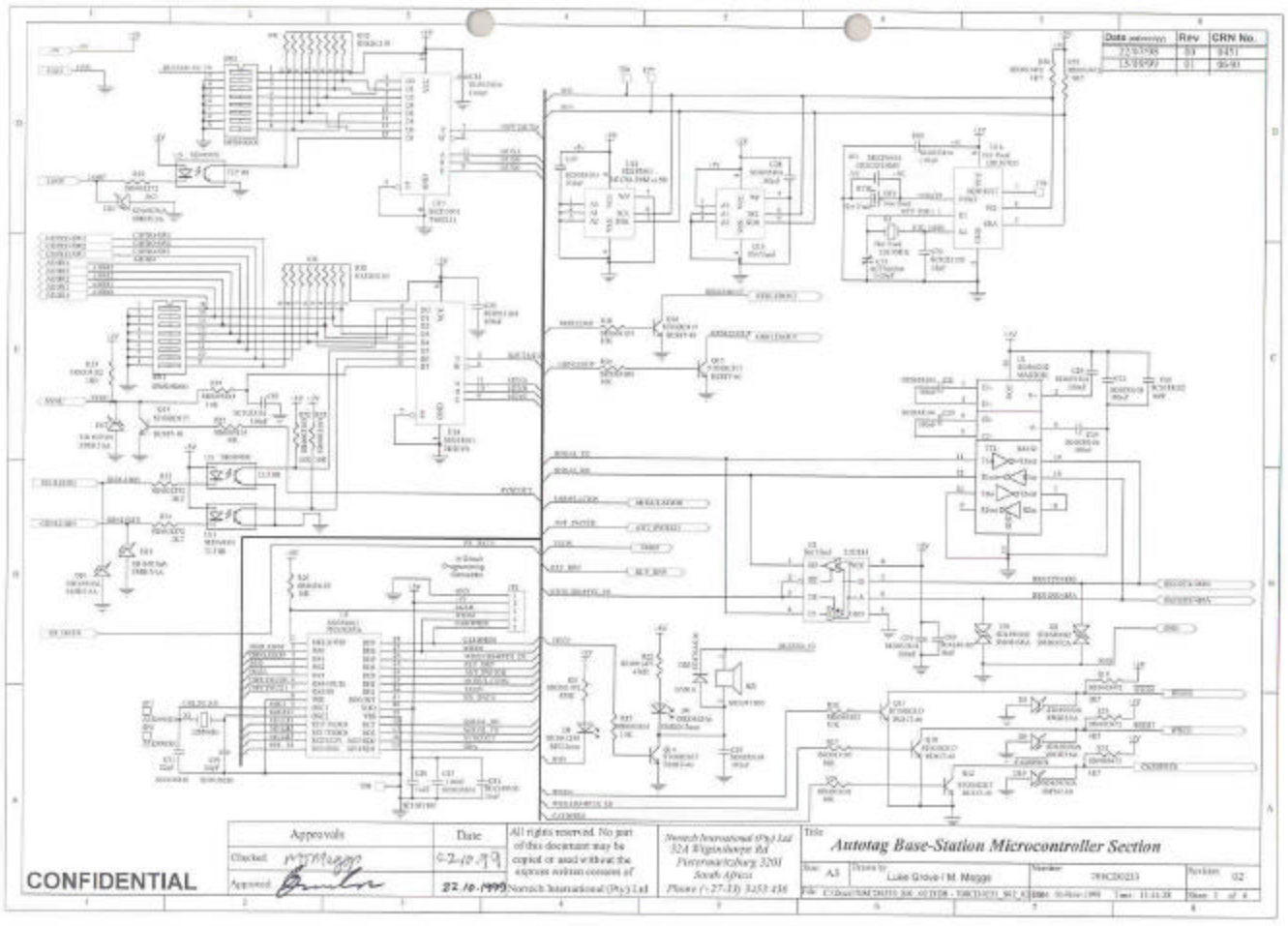
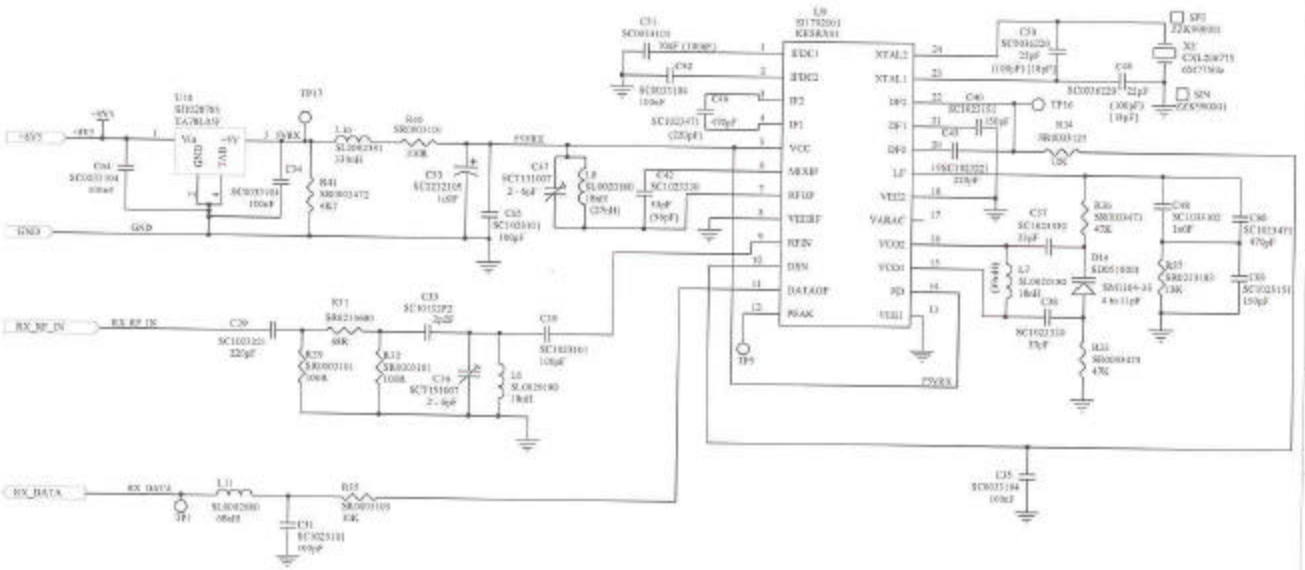

Communications
RELAY
DC Power
MAINS Power
CONFIDENTIAL
BOTTOM VIEW
Autotag Base-Station Master Schematic
Date
Rev
CRN No.
22/07/98
00
0451
15/09/99
01
0640


Date
Rev
CRN No.
CONFIDENTIAL
Approvals
Date
Checked
Approved
22.10.1999
All rights reserved. No part of this document may be copied or used without the express written consent of Nonch International (Pty) Ltd
Nonch International (Pty) Ltd
324 Wigmisthorpe Rd
Pietermaritzburg 3201
South Africa
Phone (+27.33) 3453 436
Title
Autotag Base-Station Microcontroller Section
Size A3
Drawn by Luke Grove-White
Number 29HCD0233
Revision 02

| Date | Rev | CRN No. |
|---|---|---|
| 22/07/98 | 00 | 0451 |
| 15/09/99 | 01 | 0640 |

VALUES IN ( ) ARE THE VALUES FROM MITEL's DATA SHEET
VALUES IN [ ] ARE THE VALUES FROM MITEL's REFRENCE DESIGN




CONFIDENTIAL

| Approvals | Date |
|---|---|
| Checked: | 22.10.99 |
| Approved: | 22.10.99 |

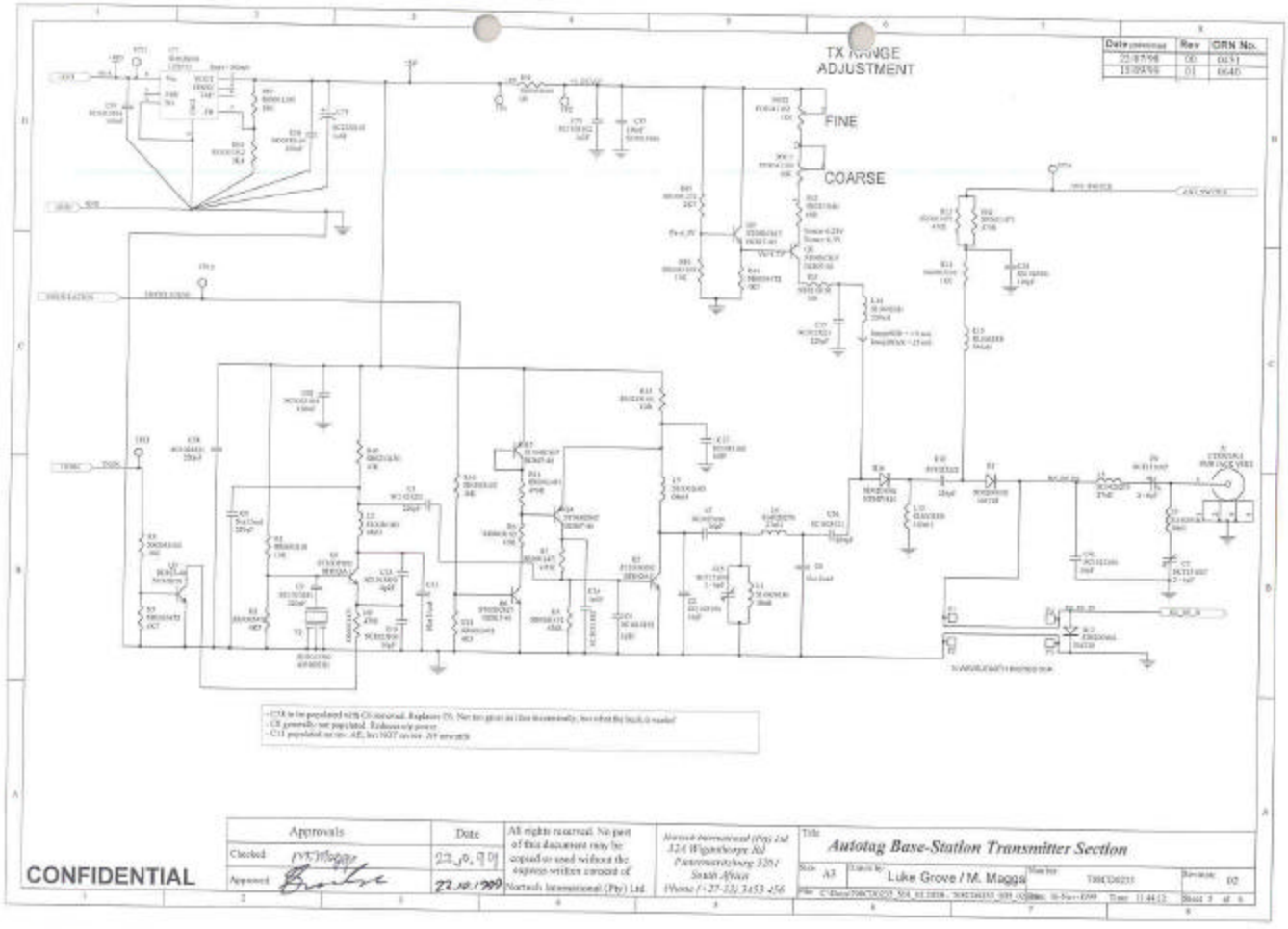
All rights reserved. No part of this document may be copied or used without the express written consent of Nortech International (Pty) Ltd.

Nortech International (Pty) Ltd
31A Pipemarkeng Rd
Pinetownarkeng 3581
South Africa
Phone (+27-31) 3452 451

Title: *Autotag Base-Station Receiver Section*

Size: A4 | Drawn by: Luke Grove / M. Meggs | Number: 709CD0233 | Revision: 02

File: C:\Data\Nortech\709_SD\709 - 709CD0233_R01_02.sch | Date: 16-Nov-1999 | Time: 11:19:02 | Sheet 4 of 6




| Date | Rev | ORN No. |
|---|---|---|
| 22/07/98 | 00 | 0191 |
| 15/09/98 | 01 | 0640 |

- C18 to be populated with C6 removed. Replaces D5. Not for ghost in Dist transmitter, but when the Stick-O reader
- C8 generally not populated. Reduces trip power
- C11 populated on rev. AE, for 9027 on rev. AF onwards

| Approvals | Date |
|---|---|
| Checked | 22.10.99 |
| Approved | 22.10.1999 |

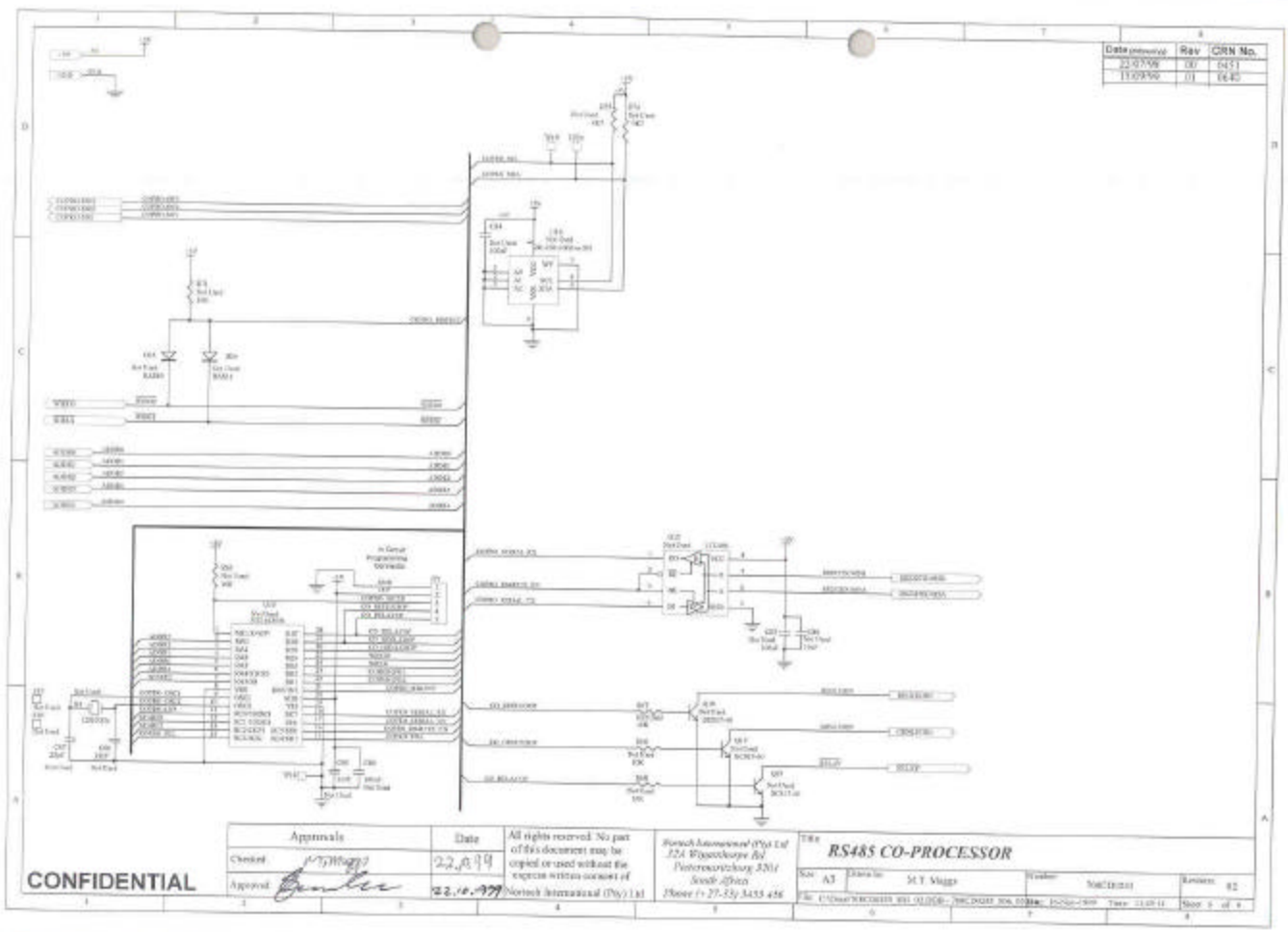
All rights reserved. No part of this document may be copied or used without the express written consent of Nortech International (Pty) Ltd.

Nortech International (Pty) Ltd
324 Wigtonkoppe Rd
Pietermaritzburg 3201
South Africa
Phone (+27-33) 3453 456

Title: *Autotag Base-Station Transmitter Section*

Size: A3 | Drawn by: Luke Grove / M. Maggs | Drawing No: TBSCD0231 | Revision: 02

CONFIDENTIAL



| Date (dd/mm/yy) | Rev | CRN No. |
|---|---|---|
| 22-07-09 | 00 | 0451 |
| 11-09-09 | 01 | 0640 |

| Approvals | Date |
|---|---|
| Checked | 22.09.09 |
| Approved | 22.10.09 |

All rights reserved. No part of this document may be copied or used without the express written consent of Nortech International (Pty) Ltd

Nortech International (Pty) Ltd
32A Wigeonhaven Rd
Pietermaritzburg 3201
South Africa
Phone (+27-33) 3455 456

**CONFIDENTIAL**

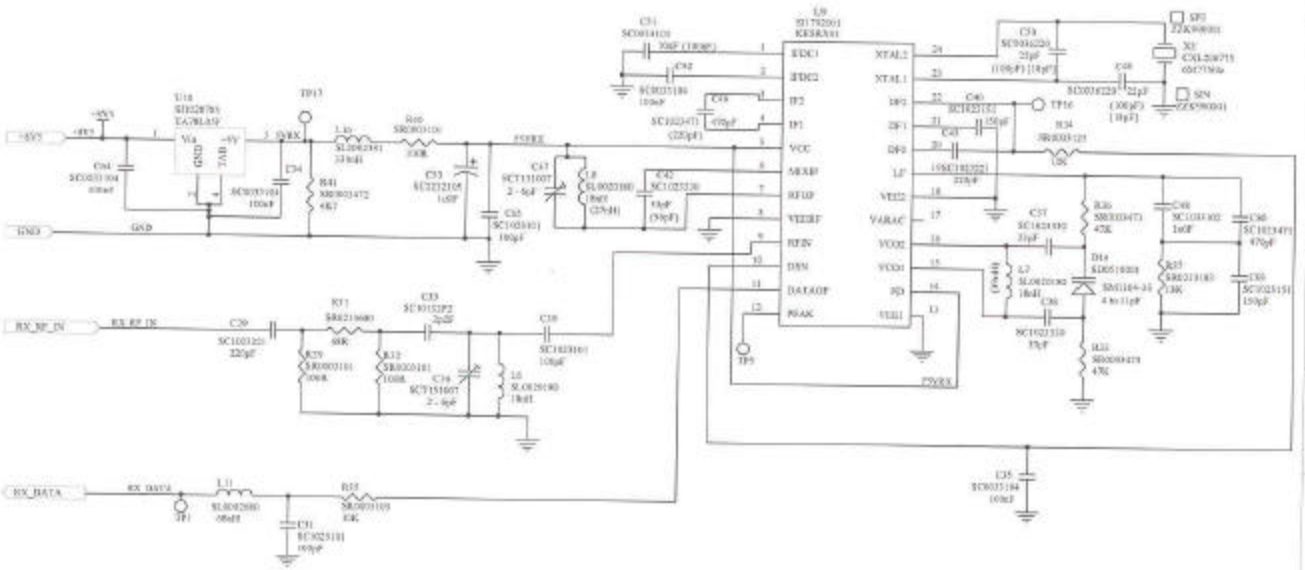
TITLE: **RS485 CO-PROCESSOR**

| Size | Drawn by | Number | Revision |
|---|---|---|---|
| A3 | M.T. Maggs | NMCDE001 | 02 |

File: C:\Data\NMCDE001 RS1 02.DSN – NMCDE001.SCH.DSN Date: 22/09/2009 Time: 11:05:11 Sheet 1 of 1

| Date | Rev | CRN No. |
|---|---|---|
| 22/07/98 | 00 | 0451 |
| 15/09/99 | 01 | 0640 |

VALUES IN ( ) ARE THE VALUES FROM MITEL's DATA SHEET
VALUES IN [ ] ARE THE VALUES FROM MITEL's REFRENCE DESIGN




CONFIDENTIAL

| Approvals | Date |
|---|---|
| Checked: | 22.10.99 |
| Approved: | 22.10.99 |

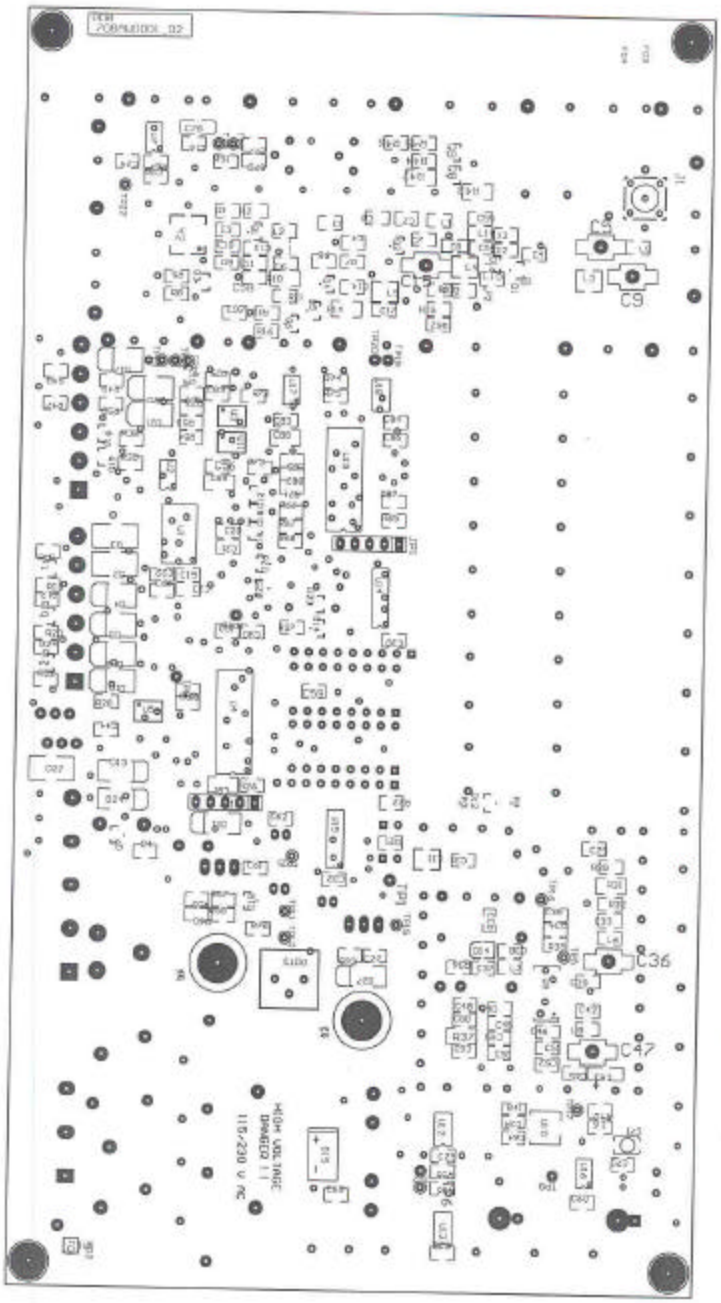
All rights reserved. No part of this document may be copied or used without the express written consent of Nortech International (Pty) Ltd.

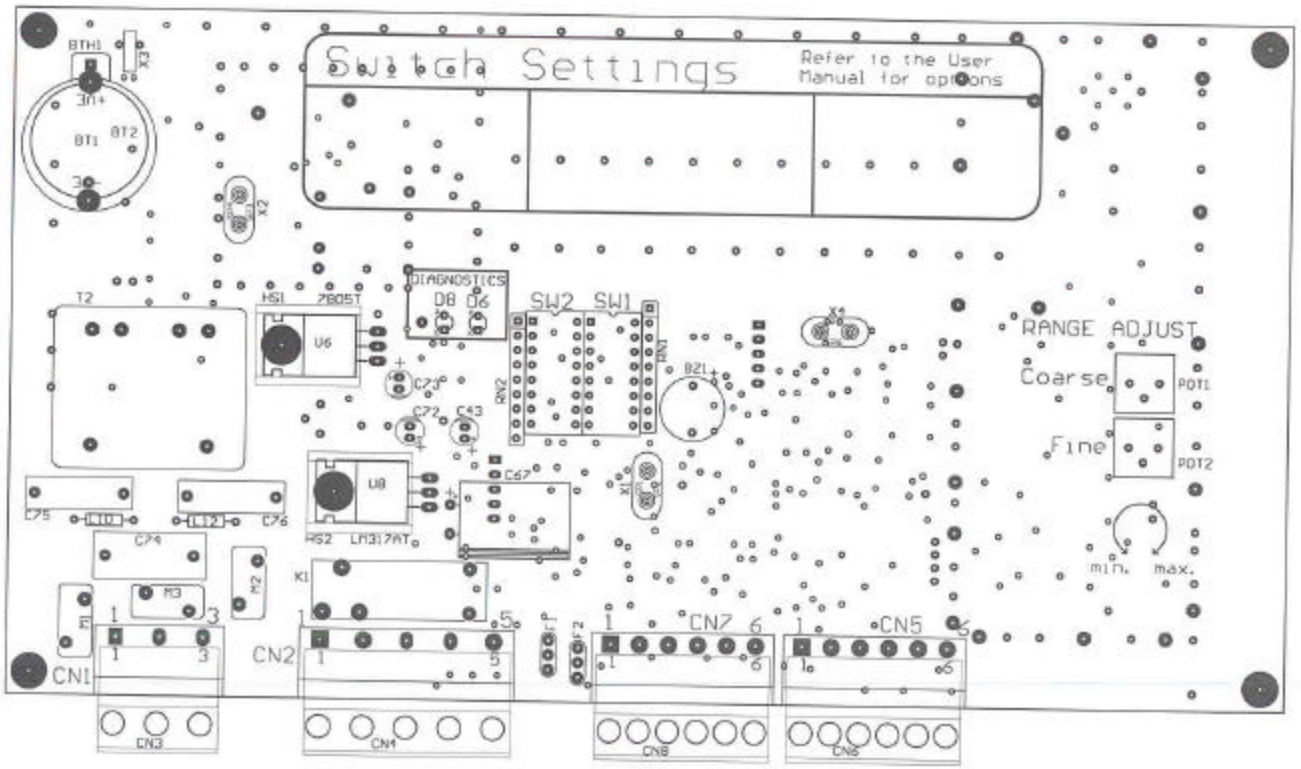
Nortech International (Pty) Ltd
31A Pipemarkeng Rd
Pinetownarkeng 3581
South Africa
Phone (+27-31) 3452 451

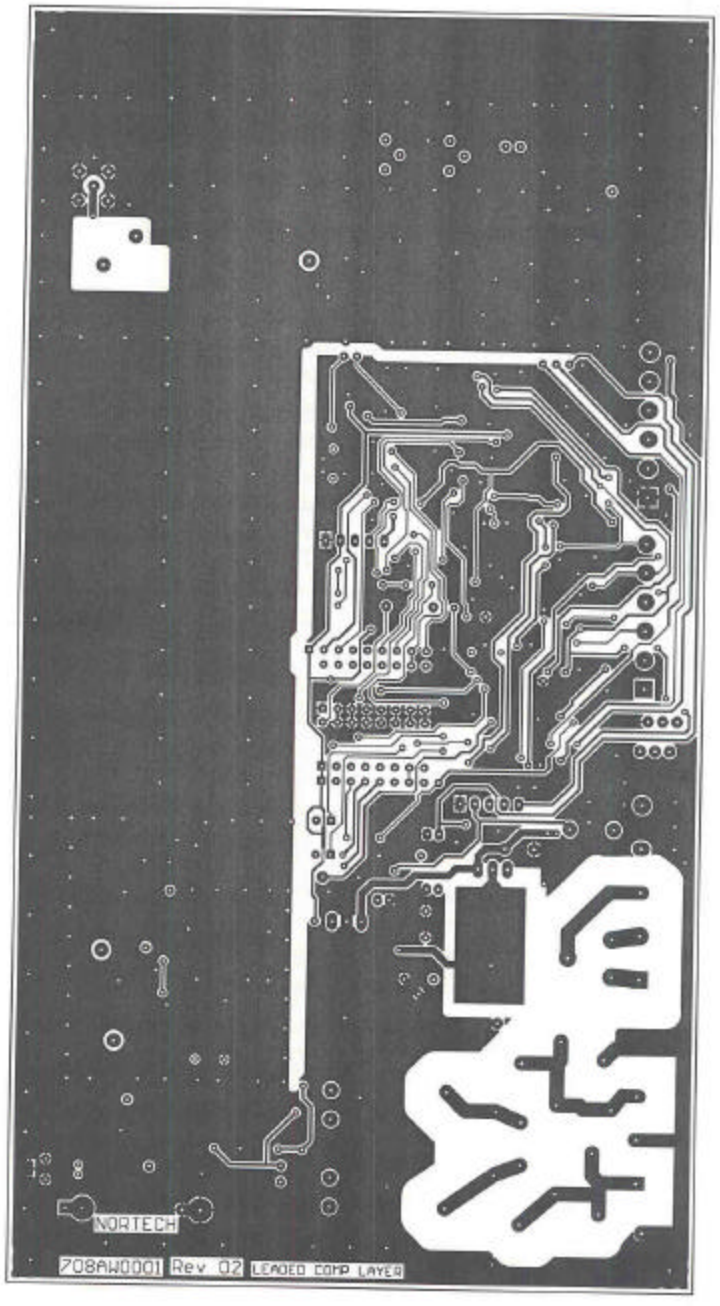
Title: *Autotag Base-Station Receiver Section*

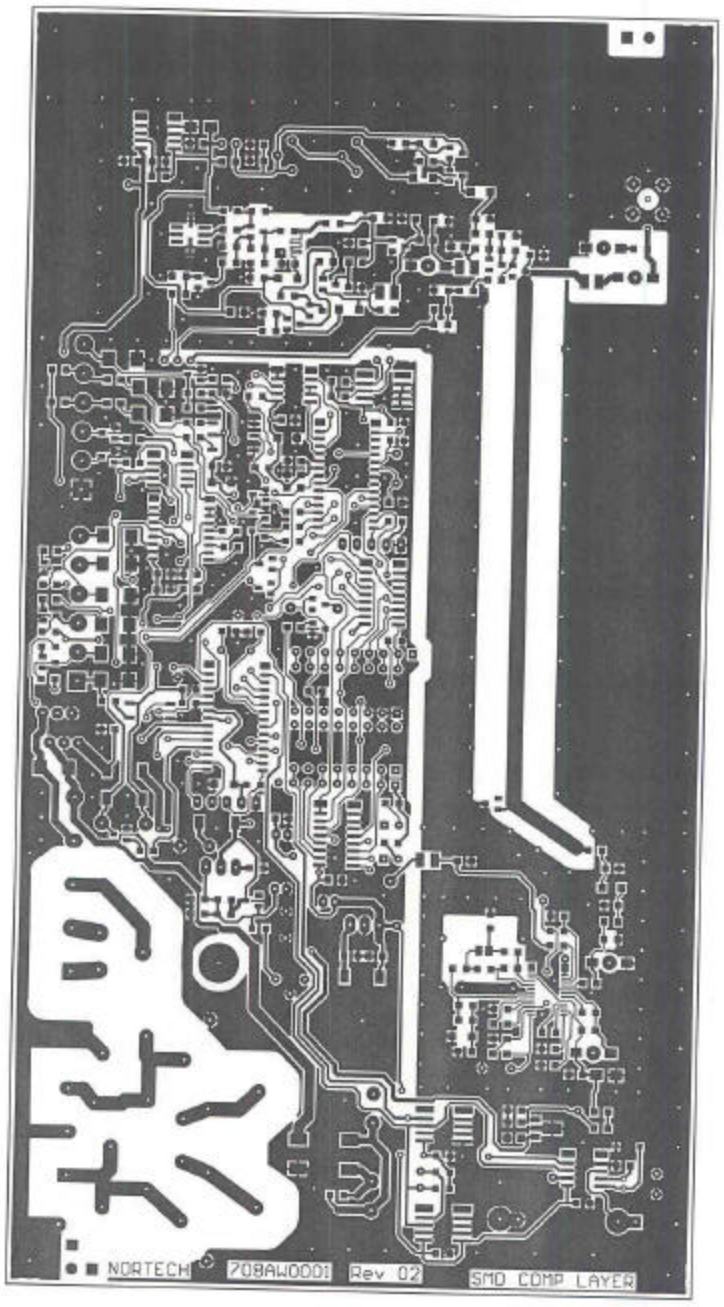
Size: A4 | Drawn by: Luke Grove / M. Meggs | Number: 709CD0233 | Revision: 02

File: C:\Data\Nortech\709_SD\709 - 709CD0233_R01_02.sch | Date: 16-Nov-1999 | Time: 11:19:02 | Sheet 4 of 6


C9
C36
C47


Switch Settings
Refer to the User Manual for options
BTH1
BT1
BT2
X3
X2
T2
HSI
ZBOST
U6
DIAGNOSTICS
D8 D6
SW2 SW1
RN1
RN2
BZ1
X4
X1
RANGE ADJUST
Coarse
POT1
Fine
POT2
min.
max.
C23
C72
C43
C67
C75
C76
C74
L11
L12
U8
RS2
LM317AT
K1
M3
M2
F1
CN1
CN2
CN7
CN5
CN3
CN4
CN8
CN6


NORTECH
708AW0001 Rev 02 LEADED COMP LAYER


NORTECH
708AW0001
Rev 02
SMD COMP LAYER