GT2

Product User Guide

DRAFT

geoforce

Because field operations don't have to be chaotic

GT2 User Guide

DRAFT

DRAFT

Geoforce Inc.
Document Number: HW-IS-0-0005
Guide Revision: 200206a
06-February-2020

ABOUT GEOFORCE

Combining a cloud-based software platform with ruggedized GPS tracking devices and global satellite and cellular networks, Geoforce's Track and Trace solutions bring control to often chaotic field operations.

With over 1,300 customers tracking more than 160,000 assets in over 90 countries, the company operates the world's largest network of connected field equipment within the oil & gas industry, and its solutions are used in many other field operations intensive industries, including agriculture, construction, mining, transportation, logistics, and rail. Headquartered in Dallas, Texas, Geoforce has R&D offices in Bozeman, Montana, sales and support offices in Houston, Texas, Denver, Colorado, Arroyo Grande, California, Macae, Brazil, Melbourne, Australia, and Calgary, Canada, and sales and service professionals in West Texas and South Louisiana.

For more information, visit www.geoforce.com.

APPLICABLE MODELS

This user guide is applicable to the following GT2 model codes:

GT2c	GT2s	GT2h
GT2C-SL-EX	GT2S-IRD-SL-EX	GT2H-IRD-SL-EX
GT2C-SL-NE	GT2S-IRD-SL-NE	

NOTICES

SUMMARY OF WARRANTY TERMS

1. - GENERAL STATEMENT OF WARRANTY

Geoforce warrants that for one year from that date that title passes to Customer for Hardware (the "Warranty Period"), the Hardware sold will be free of defects in materials and workmanship when installed, operated, and serviced in strict accordance with Geoforce's and the manufacturer's requirements.

Geoforce will, at its sole option and at no charge to Customer, refund, repair, or send a replacement for the Hardware to the location of initial export from a Geoforce affiliate noting Customer as the importer/exporter of record (if outside the US).

2. - EXCEPTIONS FROM WARRANTY COVERAGE

This warranty does not cover: (a) Hardware that has been tampered with or serviced without Geoforce's authorization, (b) Hardware that has been lost or stolen through no fault of Geoforce, (c) Hardware that is designed to be consumable or (d) Hardware subjected to abuse, misuse, or neglect, or (e) Hardware that has been deemed failed due to improper operational use or mis-matched to ineffective use-case by the customer.

Geoforce does not warrant that the hardware will meet customer's needs or expectations or that any piece of hardware will work on any particular networks.

ALL OTHER WARRANTIES ARE EXPRESSLY DISCLAIMED INCLUDING THE WARRANTY OF MERCHANTABILITY AND FITNESS FOR A PARTICULAR PURPOSE.

3. - ADDITIONAL WARRANTY TERMS

See the fully executed Geoforce purchase agreement and Statement of Warranty for a complete statement of warranty terms.

REGULATORY COMPLIANCE STATEMENT

The customer is solely responsible for compliance with all legal, regulatory, and safety-related requirements concerning the products and any use of Geoforce products in the customer's applications, not withstanding any applications related information or support that may be provided by Geoforce.

RIGHT TO CHANGE MATERIAL

The information and specifications in this document are subject to change without notice.

COPYRIGHT NOTICE

Copyright © 2020 Geoforce Inc. - All Rights Reserved. No portion of this media may be reproduced in any form without permission from Geoforce, except as permitted by U.S. copyright law. For permissions contact Geoforce at www.geoforce.com.

ABOUT THE GEOFORCE GT2

The Geoforce GT2 is the 4th generation GPS tracker in the proven Geoforce GT series of world-leading industrial tracking devices. The GT2 is a single-device platform available in three configurations: Satellite-only, Cellular-only, and Hybrid (Sat + Cell). All variants have a dual power system (solar plus primary battery), providing 100% global asset visibility, while operating in the world's harshest environments.

The GT2's rigid design and manufacturing processes provide unmatched and proven durability in the field. The dual battery combination ensures a service life of 10+ years. Combining advanced wireless technologies and smart power management, the GT2 is the most rugged and reliable device family of trackers ever produced.

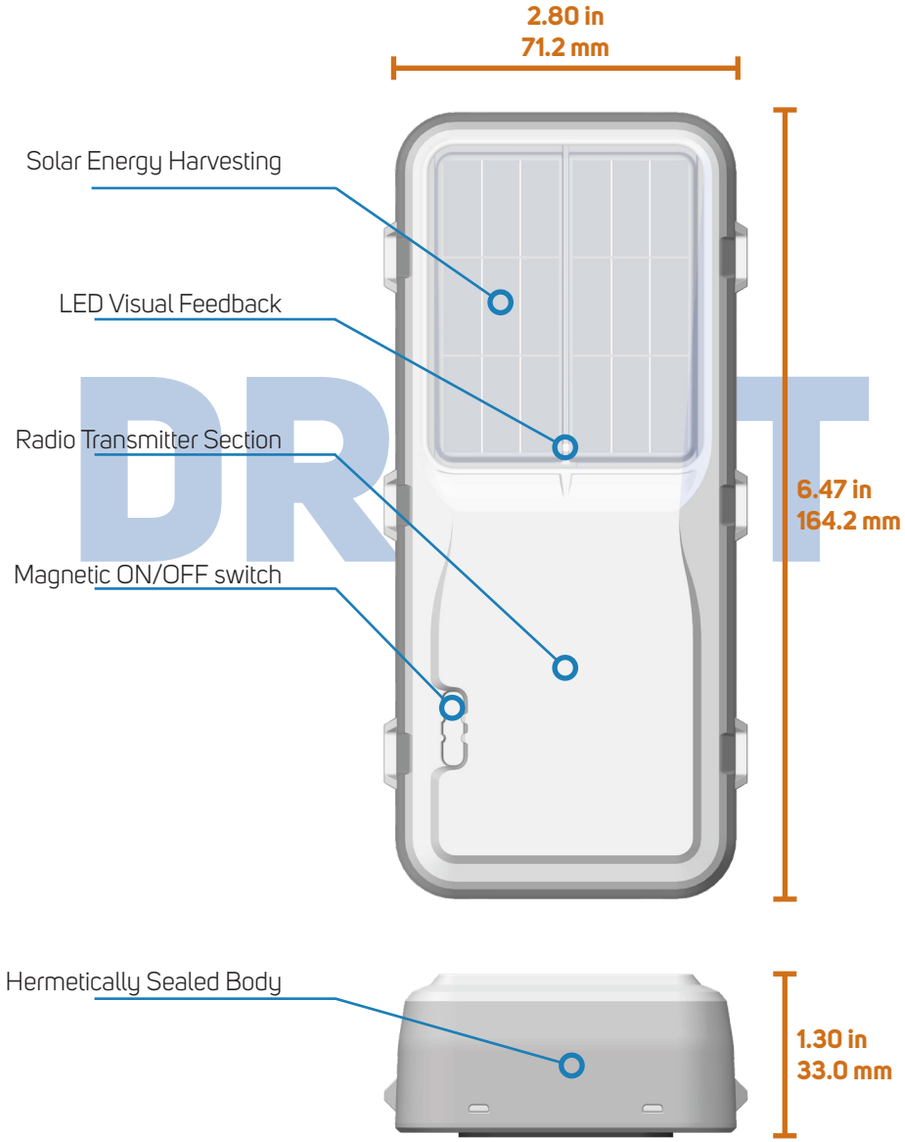

DRAFT

STEP 1: SELECT A MOUNTING LOCATION

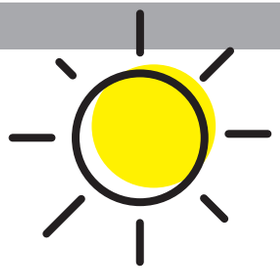

To ensure ideal performance it is advised to consider the following:

1. Select a mounting location that provides the best view of the sky and the sun.
2. A flat horizontal mounting position (lying flat, facing skyward) is preferred.
3. Vertical mounting orientations (solar panel side of device facing horizon) are acceptable.

   NOTE: These orientations may impact performance and overall battery life.
4. Mount on the flattest and hardest surface possible.
5. Select a mounting location that isolates the GT2 from damage.
6. Recommended mounting area size is 8.5" L x 3.5" W (216mm L x 90mm W).
7. Thoroughly clean the mounting area, especially if using VHB mounting.
8. DO NOT PAINT OR COVER THE GT2.
   NOTE: Doing so may negatively impact product performance and battery life.

STEP 2: SELECT A MOUNTING METHOD

VHB ADHESIVE MOUNTING

For installations that do not require a protective bezel, that are isolated from abuse, extreme weather, and temperatures the GT2 has a pre-installed set of VHB adhesive pads that can be used to "peel and stick" to any clean surface above 50°F (10°C). The Geoforce VHB Installation and Removal Guide **MUST** be followed to ensure proper adhesion to the asset.

VHB is not recommended if using a protective bezel mounting option.

MECHANICAL MOUNTING

The GT2 Can be mounted with the following Geoforce mounting accessories:

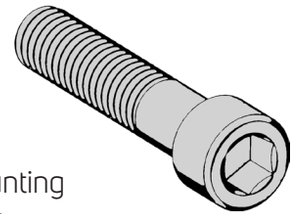

- GT2 Stainless Steel Ultra-Duty Metal Mounting Bezel (**SKU: PENDING**)
- GT2 Composite Reinforced Plastic Mounting Bezel (**SKU: PENDING**)

Additional information on each mechnical mounting method is available on the following pages.

NOTE: For EX rated products, to minimize electrostatic spark concerns in hazardous locations, ensure the stainless mounting bezel has metal to metal contact with the asset. Once secured, mounting hardware can provide metal to metal contact.

GT2 General Installation and Mounting Guide

STEP 3: ASSOCIATE THE GT2 TO THE ASSET

Using Geoforce Trace and Trace Web Application

1. Record the GT2 8-digit numerical serial number (ESN).
2. Record the asset name and serial number (on to which the GT2 was installed).
3. Login to the Track and Trace application, select (or create) the asset, and assign the device ESN to the asset.

Using Geoforce Mobile Field Tools Mobile App

1. Open the Geoforce Mobile Field Tools application.
2. Select (or create) the asset in mobile field tools.
3. Scan the QR code on the top surface of the GT2 to assign the device to the asset.

For additional information on device installation, association, and using the various Geoforce applications, feel free to contact your friendly Geoforce account service representative.

helpdesk@geoforce.com **888.574.3878**

STEP 4: INITIALIZE THE GT2

TO BEGIN SERVICE

Using the pull tab, remove the magnet while outdoors with a good sky view.

NOTE: Removing the magnet indoors may lead the GT2 to enter Power Save Mode.

Upon device startup, the GT2 will flash its LED green.

⚠ WARNING: ⚠

IF YOU DO NOT REMOVE THE MAGNET, THE GT2 WILL NOT WORK!

DRAFT DRAFT

GT2 Metal Bezel Mounting Guide

STEP 1: SELECT MOUNTING HARDWARE

SOCKET-HEAD CAP SCREWS (3/8" BOLT DIAMETER) - STRUCTURAL

For installations that can be drilled and tapped and do not have access to the back side of the mounting surface.

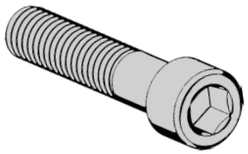

EXAMPLE OPTION 1 (LESS HARSH ENVIRONMENTS):

Vendor: McMaster Carr (www.mcmaster.com), Part Number: **96006A922**
Description: Black Oxide 18-8 Stainless Steel Socket Head Cap Screw 3/8"

EXAMPLE OPTION 2 (MORE HARSH ENVIRONMENTS):

Vendor: McMaster Carr (www.mcmaster.com), Part Number: **92185A677**
Description: Type 316 Stainless Steel Socket Head Cap Screw 3/8"

HEX-HEAD CAP SCREWS (3/8" BOLT DIAMETER) - STRUCTURAL

For installations having access to the back side of the mounting surface for securing a nut.

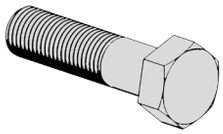

EXAMPLE OPTION 1 (LESS HARSH ENVIRONMENTS):

Vendor: McMaster Carr (www.mcmaster.com), Part Number: **92198A628**
Description: 18-8 Stainless Steel Hex Head Cap Screw 3/8"

EXAMPLE OPTION 2 (MORE HARSH ENVIRONMENTS):

Vendor: McMaster Carr (www.mcmaster.com), Part Number: **93190A367**
Description: Type 316 Stainless Steel Hex Head Cap Screw 3/8"

SELF-DRILLING SHEET-METAL SCREWS (1/4" DIAMETER) - NON-STRUCTURAL

For installations with thinner mounting surfaces where a quicker less robust install is needed.

Vendor: McMaster Carr (www.mcmaster.com), Part Number: **90822A630**
Description: Stainless Steel Drilling Screw for Metal, High-Strength, 1/4"

METAL BANDING - NON-STRUCTURAL

For securing the metal mounting bezel when bolts or screws cannot be used.

Tip: This is also good for providing a security seal around the installed GT2 bezel mounting bolts.

Vendor: McMaster Carr (www.mcmaster.com)
Banding Part Number: **5422K42**
Description: Low-Profile Hose Banding Type 201 Stainless Steel, 1/4" Wide, 0.020" Thick
Buckle Part Number: **5422K43**
Description: Type 201 Stainless Steel Ear Style Buckle for 3/8" Wide Low-Profile Hose Banding
Tooling Part Number: **5424K3**

DRAFT

STEP 2: INSTALL

1. Drill two mounting holes 7.25" apart for 3/8" bolts. Thread the holes if needed.
2. Clean the mounting surface of drill shavings.
3. Hand press the GT2 into the metal bezel and secure the assembly onto the mounting surface with the selected hardware.

IMPORTANT NOTES

- It is highly recommended to use mounting fasteners made of a material that resists galvanic corrosion and environmental weathering such as stainless steel. This is especially important for marine applications where a high grade should be used.
- To avoid staining and discoloration, zinc coated mounting hardware should not be used.
- When using stainless steel mounting hardware, it is highly recommended to use a marine grade anti-seize material on the bolt threads as galling and seizing of stainless nuts and stainless bolts may occur.
- Ensure all mounting hardware is compatible with the asset.
- Ensure all regulatory and asset owner policies and procedures are adhered to during installation.

GT2 Metal Bezel Installation Drawing

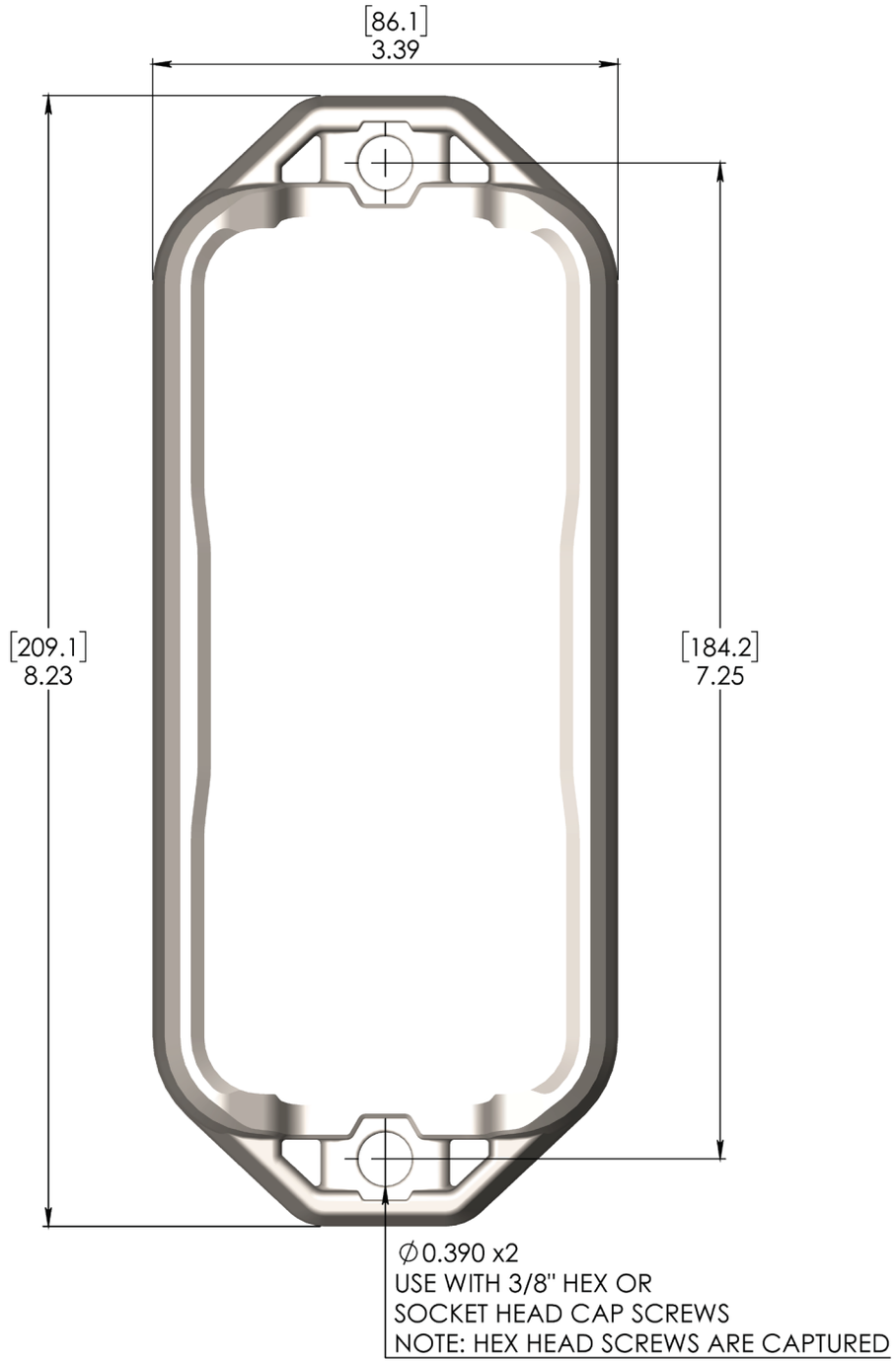

GT2 Plastic Bezel Mounting Guide

STEP 1: SELECT MOUNTING HARDWARE

SOCKET-HEAD CAP SCREWS (3/8" BOLT DIAMETER) - STRUCTURAL

For installations that can be drilled and tapped and do not have access to the back side of the mounting surface.

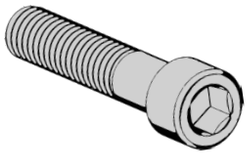

EXAMPLE OPTION 1 (LESS HARSH ENVIRONMENTS):

Vendor: McMaster Carr (www.mcmaster.com), Part Number: **96006A922**
Description: Black Oxide 18-8 Stainless Steel Socket Head Cap Screw 3/8"

EXAMPLE OPTION 2 (MORE HARSH ENVIRONMENTS):

Vendor: McMaster Carr (www.mcmaster.com), Part Number: **92185A677**
Description: Type 316 Stainless Steel Socket Head Cap Screw 3/8"

HEX-HEAD CAP SCREWS (3/8" BOLT DIAMETER) - STRUCTURAL

For installations having access to the back side of the mounting surface for securing a nut.

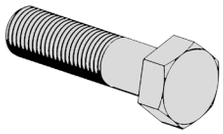

EXAMPLE OPTION 1 (LESS HARSH ENVIRONMENTS):

Vendor: McMaster Carr (www.mcmaster.com), Part Number: **92198A628**
Description: 18-8 Stainless Steel Hex Head Cap Screw 3/8"

EXAMPLE OPTION 2 (MORE HARSH ENVIRONMENTS):

Vendor: McMaster Carr (www.mcmaster.com), Part Number: **93190A367**
Description: Type 316 Stainless Steel Hex Head Cap Screw 3/8"

SELF-DRILLING SHEET-METAL SCREWS (1/4" DIAMETER) - NON-STRUCTURAL

For installations with thinner mounting surfaces where a quicker less robust install is needed.

Vendor: McMaster Carr (www.mcmaster.com), Part Number: **90822A630**
Description: Stainless Steel Drilling Screw for Metal, High-Strength, 1/4"

DRAFT

STEP 2: INSTALL

1. Drill two mounting holes 7.25" apart for 3/8" bolts. Thread the holes if needed.
2. Clean the mounting surface of drill shavings.
3. Hand press the GT2 into the plastic bezel until it snaps in place and secure the assembly onto the mounting surface with the selected hardware.

IMPORTANT NOTES

- It is highly recommended to use mounting fasteners made of a material that resists galvanic corrosion and environmental weathering such as stainless steel. This is especially important for marine applications where a high grade should be used.
- When using stainless steel mounting hardware, it is highly recommended to use a marine grade anti-seize material on the bolt threads as galling and seizing of stainless nuts and stainless bolts may occur.
- Ensure all mounting hardware is compatible with the asset.
- Ensure all regulatory and asset owner policies and procedures are adhered to during installation.

GT2 Plastic Bezel Installation Drawing

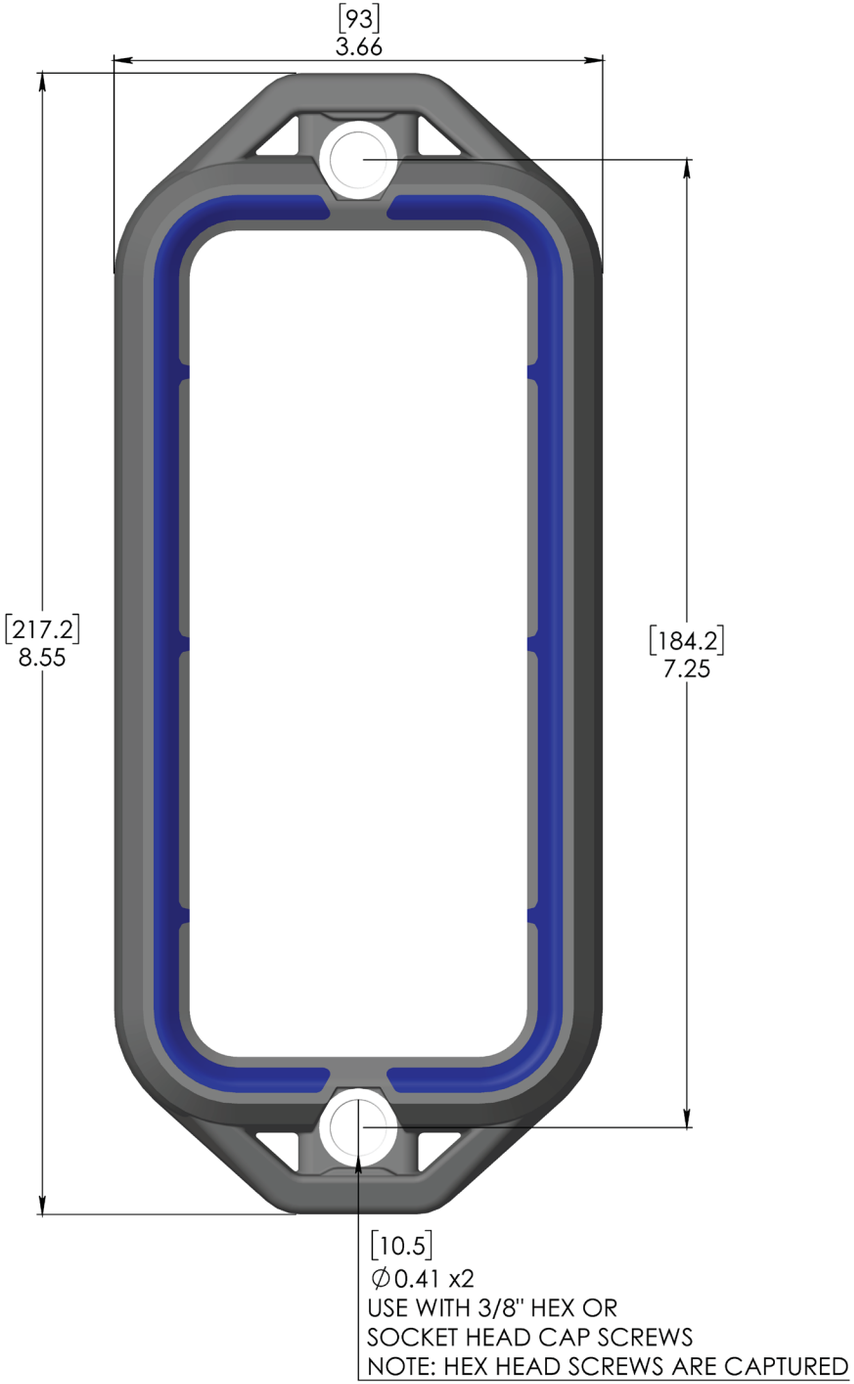

GT2 General Maintenance

GENERAL MAINTENANCE

SOLAR PANEL CLEANLINESS

The GT2 is maintenance free other than general upkeep for cleanliness to maintain normal device operation and solar capacity. To maintain a long product life and optimal performance, the GT2 and its solar panel should be kept as clean as possible of dirt, grease, chemical, and other foreign matter buildups.

The GT2 solar array window will sustain scratching and surface damages over the lifetime of the product. The GT2 is designed to handle minor surface defects such as these and still maintain proper device performance over a variety of light levels.

The GT2, however, must be replaced if there are any signs of severe mechanical damage such as puncturing and cracking of the GT2 housing or window, or crushing of the unit itself.

METAL BEZEL CLEANLINESS

Light amounts of red rust may occur on the optional GT2 metal bezel. This red rust generally originates from free iron, surface deposits, and general contamination from weathering and dirt. The presence of light amounts of red rust does not affect the integrity or function of the product and does not originate from the metal part structure.

DISPOSAL NOTICE

Warning: Do not dispose of product or batteries in municipal waste areas. Geoforce recommends to dispose of old retired GT2 devices in acceptable local e-waste recycling locations.

FOR EX RATED PRODUCTS AND HAZARDOUS LOCATIONS SAFETY

When working with or cleaning the GT2, Geoforce recommends to do so outside of hazardous locations. If this is not possible Geoforce recommends to be mindful at all times of electro-static discharge (ESD) shock hazards and ESD avoidance by using proper grounding techniques when touching this device or the asset it is mounted on.

DRAFT

GT2 Replacement

STEP 1: REMOVE THE OLD GT2 ASSEMBLY

1. Record the old GT2 serial number for deactivation.
2. Record the asset name and serial number (on which the GT2 was installed).
3. Remove the old GT2 assembly from its mounting position by loosening and removing its mounting bolts. Be mindful of dropped object hazards.
4. Separate the GT2 electronics assembly from the protective bezel by hand pressing the two apart.
5. If unit is installed with VHB refer to the Geoforce VHB installation and removal guide for removal steps.

STEP 2: REPLACE WITH A NEW GT2 ASSEMBLY

1. Ensure the mounting bezel and its mounting surface are clean and free of dirt, grease and chemicals.
2. Install the new GT2 electronics assembly by firmly hand pressing it into its protective bezel.

STEP 3: REINSTALL THE NEW GT2 ASSEMBLY

1. Record the new GT2 serial number for activation.
2. Record the asset serial name and number (on which the GT2 was installed).
3. Reinstall the GT2 assembly back onto its mounting location and secure. Geoforce recommends using new mounting hardware to ensure long service life.
4. DO NOT PAINT OR COVER THE GT2.
   NOTE: Doing so may negatively impact product performance and battery life.

STEP 4: INITIALIZE THE GT2

TO BEGIN SERVICE

Using the pull tab, remove the magnet while outdoors with a good sky view.

NOTE: Removing the magnet indoors may lead the GT2 to enter Power Save Mode.

Upon device startup, the GT2 will flash its LED green.

⚠ WARNING: ⚠

IF YOU DO NOT REMOVE THE MAGNET, THE GT2 WILL NOT WORK!

DRAFT

NOTES

DRAFT

DRAFT

Copyright © 2020, Geoforce Inc.

www.geoforce.com
5830 Granite Parkway, Suite 1200
Plano. TX 75024

Because field operations don't have to be chaotic