GT0 User, Safety and Regulatory Guide

Guide Revision v150501a

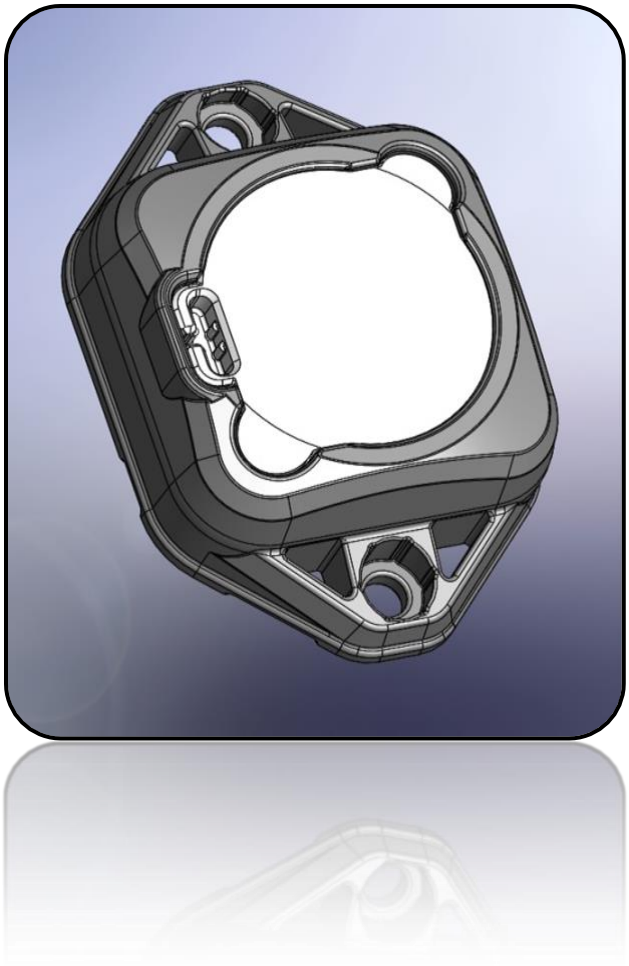

Geoforce Inc.
Part SKU Number: "GT0K"
May 1, 2015

Table of Contents

GT0 Installation and Mounting Guide 3
Mechanical Mounting 3
VHB Adhesive Mounting 3
Temporary and Fastener Free Mounting 3
GT0 Installation Drawing 4
GT0 Mounting Hardware Examples 5
GT0 Maintenance 6
The GT0 has no user based maintenance. 6
Appendix A: Shipping and Transport Guidance 7
Transport and Export Control Codes 7
Lithium Battery Regulatory Information 7
Appendix B: Wireless/Environmental Regulatory Guidance 8
RF Radiation Exposure Statement 8
RF/Environmental Certifications 8
Regulatory Notices 8
Regulatory Notices 9
Disposal Notices 9
Appendix C: Safety Regulatory Guidance 10
Ordinary Location Certifications 10
Appendix D: Power-down Guidance 11
GT0 OFF and Radio Silent Mode 01 11
Appendix E: General Notices 12
Appendix F: Supporting Documentation 13

About Geoforce:

Geoforce is a privately held company that was founded in 2007 by oil and gas veterans who directly understood the dire need for a better way to manage the high-value, mobile, remote, mission-critical assets of companies in the industry, but unlike other oil hands, also had the technological know-how to fill that need.

Our intuitive, reliable and scalable technology, developed through our extensive oil and gas industry experience, provides you with on-demand access to unique operational insight.

Geoforce provides asset management solutions utilizing a blend of GPS, RFID and other wireless technologies accessible via customizable web-based software and enterprise grade web services. With the largest satellite asset tracking deployment in the oilfield, Geoforce is proven to increase efficiency, transparency and profits.

© Geoforce Inc., All Rights Reserved

GT0 Installation and Mounting Guide

helpdesk@geoforce.com - http://help.geoforce.com

Step 1: Selecting a Mounting Location

To ensure ideal performance please consider the following:

1. Select a mounting location that provides the best view of the sky.
2. A horizontal mounting position (lying flat, facing skyward).
3. Mount on the flattest and hardest surface possible.
4. Select a mounting location that isolates the GT0 from damage.
5. Recommended mounting area size is 7"L x 4"W.
6. Thoroughly clean the mounting area.

Step 2: Record the Asset and GT0 Serial Numbers

1. Record the GT0 serial number.
2. Record the asset serial number (on which the GT0 was installed).
3. Send this information to your Geoforce account administrator.

Step 3: Selecting a Mounting Method

Mechanical Mounting

Socket-Head Cap Screws (5/16" or 8mm bolt diameter)
For installations that can be drilled and tapped and do not have access to the back side of the mounting surface.

Hex-Head Cap Screws (5/16" or 8mm bolt diameter)
For installations that have access to the back side of the mounting surface for securing a nut or bolt.

Self-drilling Sheet-metal Screws (1/4" diameter)
For installations with thinner mounting surfaces where a quicker install is needed.

Heavy Duty Rivets (3/16", ¼" or 4,6mm shank diameter)
For installations that do not have access to the back side of a thinner mounting surface and requires basic tamper resistance.

It is recommended to use fasteners made of a material that resists corrosion and environmental weathering such as stainless steel.

Hex Head Cap Screw
The GT0 will capture and hold a Hex-Head Cap Screw or Nut while being secured from the back side.

Socket Head Cap Screw
Geoforce can provide information on example mounting hardware upon request.

VHB Adhesive Mounting

For installations that are **isolated** from abuse, extreme weather and temperatures the GT0 has a pre-installed pad of VHB adhesive tape that can be used to "peel and stick" to any **clean** surface above 50F (10C). Using VHB **REQUIRES** installing to the Geoforce VHB installation guide process.

Graphic TBD

Refer to the Geoforce VHB Installation Guide!

VHB Adhesive Pad

Temporary and Fastener Free Mounting

Metal straps and "Zip-ties" (1/4" or 6mm strap width)
For installations that are quick and temporary or that may require a simple mechanical backup for VHB installations.

Graphic TBD

Graphic TBD

Strapping or Zip-ties

Step 4: Initializing the GT0

Remove RED magnet lanyard from GT0 to begin service.

NOTE: IF YOU DO NOT REMOVE THE RED MAGNET THE GT0 WILL NOT WORK!!!

Graphic TBD

© Geoforce Inc., All Rights Reserved

GT0 Installation Drawing

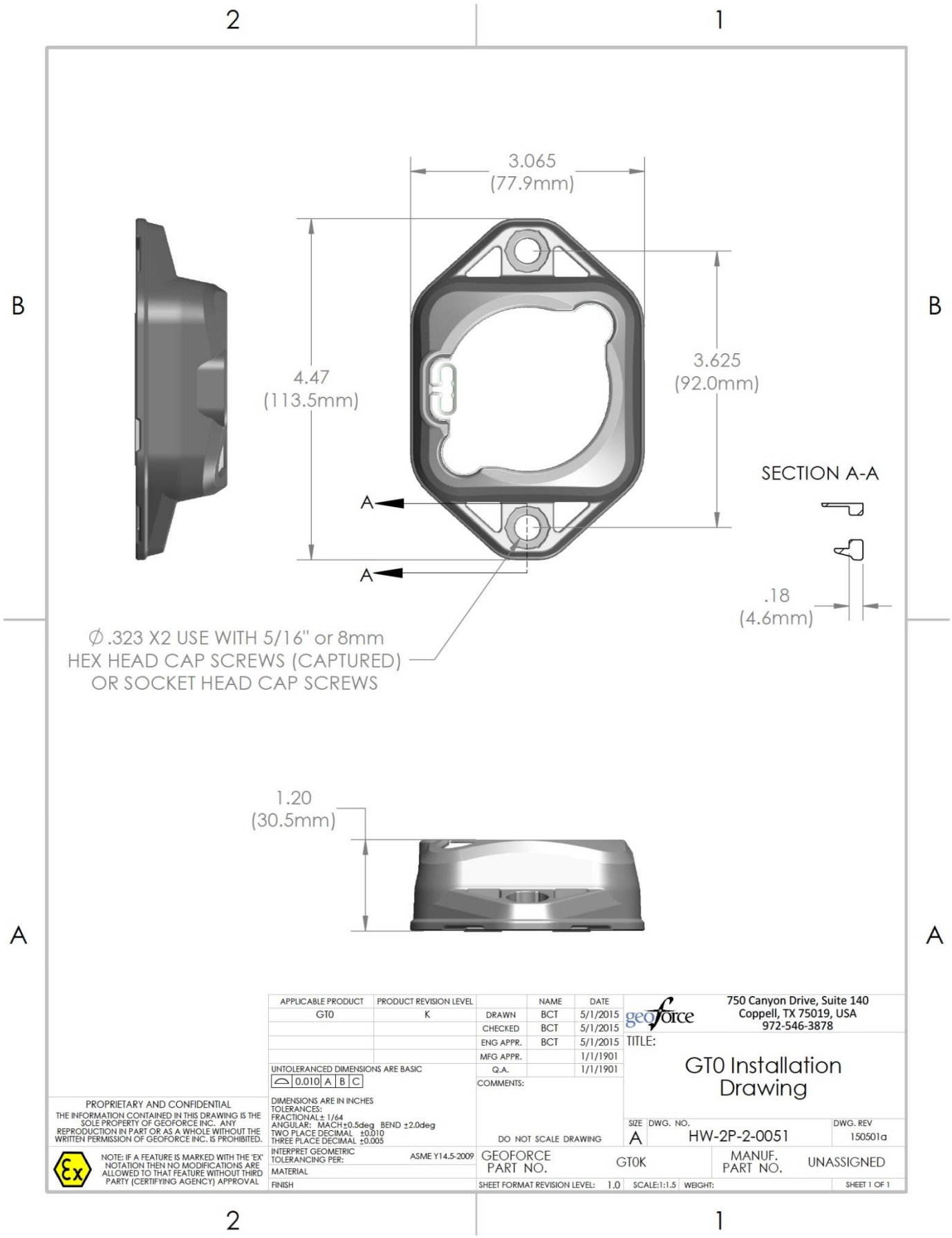

© Geoforce Inc., All Rights Reserved

GTO Mounting Hardware Examples

NOTE: When using Stainless Steel mounting bolts it is highly recommended to not use stainless steel nuts as galling and seizing of the nut may occur. If using stainless nuts use an anti-seize compound on the nut/bolt.

Socket Head Cap Screws (Bolt length may vary depending on mounting surface)

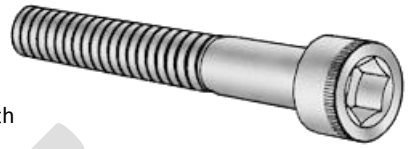

Option 1 (standard):

Vendor: McMaster Carr (www.mcmaster.com)
Part Number: 96006A831
Description: Black Oxide 18-8 Stainless Steel Socket Head Cap Screw 5/16”-18 Thread, 1-1/4" Length

Option 2 (metric):

Vendor: McMaster Carr (www.mcmaster.com)
Part Number: 91292A148
Description: Metric 18-8 SS Socket Head Cap Screw M8 Thread, 25mm Length, 1.25mm Pitch

Hex Head Cap Screws (Bolt length may vary depending on mounting surface)

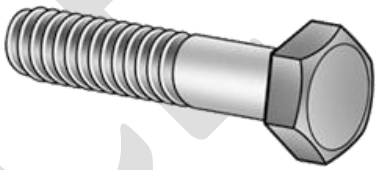

Option 1 (standard):

Vendor: McMaster Carr (www.mcmaster.com)
Part Number: 92240A585
Description: 18-8 Stainless Steel Hex Head Cap Screw 5/16”-18 Thread, 1-1/4" Long, Fully Threaded

Option 2 (metric):

Vendor: McMaster Carr (www.mcmaster.com)
Part Number: 91287A153
Description: Metric 18-8 SS Hex Head Cap Screw M8 Size, 25mm Length, 1.25mm Pitch, Fully Threaded

Self Drilling Sheet Metal Screws (Screw length may vary depending on mounting surface)

Option 1:

Vendor: McMaster Carr (www.mcmaster.com)
Part Number: 90064A709
Description: Zinc-Plated Steel Drilling Screw for Metal 5/16"-18 Thread, 1-1/4" Length, Drill Point #3

Option 2:

Vendor: McMaster Carr (www.mcmaster.com)
Part Number: 92364A278
Description: Pan Head Drilling Screw for Metal 410 SS, 1/4"-14 Thread, 1" Length, Drill Point #3

Heavy Duty Rivets (Material thickness may vary depending on mounting surface)

Option 1:

Vendor: McMaster Carr (www.mcmaster.com)
Part Number: 97525A522
Description: 18-8 SS Blind Rivet with 18-8 SS Mandrel Domed, 3/16" Dia, .751"-.875" Material Thickness

Option 2:

Vendor: McMaster Carr (www.mcmaster.com)
Part Number: 97525A572
Description: 18-8 SS Blind Rivet with 18-8 SS Mandrel Domed, 1/4" Dia, .876"-1" Material Thickness

Zip Ties (Length may vary depending on mounting surface)

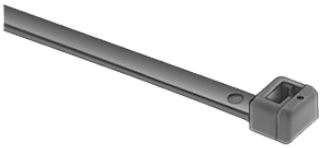

Option 1:

Vendor: McMaster Carr (www.mcmaster.com)
Part Number: 70215K93
Description: Harsh-Environment Cable Tie Chemical-Resistent/Fire-Retardant Tefzel, 14-1/2" Length

Option 2:

Vendor: McMaster Carr (www.mcmaster.com)
Part Number: 6614K58
Description: Smooth Body Nylon Cable Tie 30" L, 9" Bundle Dia, 120# Tensile Strength, UV Resistant Black

Metal Strapping (Length may vary depending on mounting surface, requires a crimp tool)

Option 1:

Vendor: McMaster Carr (www.mcmaster.com)
Part Number: 69855K74
Description: Reusable SS Harsh-Environment Cable Tie Nylon-Coated, 18" Length, .25" Width

GEOFORCE

© Geoforce Inc., All Rights Reserved

GT0 Maintenance

The GT0 has no user based maintenance.

GEOFORCE

© Geoforce Inc., All Rights Reserved

Appendix A: Shipping and Transport Guidance

Transport and Export Control Codes

Export Control Classification Number (ECCN)

5A991.b.3: Telecommunication equipment, not controlled by 5A001 "Telecommunications systems, equipment, components and accessories"

US Census Bureau "Schedule B" code

8517.62.0050: Digital (Modems, Switches, etc.) and RF Products

For Warranty Returns: 9801.10.0000

International Harmonized Tariff code (HTS)(HS)

8517.62.0050: Digital (Modems, Switches, etc.) and RF Products

For Warranty Returns: 9801.10.0000

ITAR

The Geoforce GT0 is not classified as a "defense article" or as "dual use" and does not require an export license under ITAR regulations.

Lithium Battery Regulatory Information

Lithium Battery Cell Type: ***Lithium Metal Batteries Contained in Equipment***

Cell Chemistry: ***Lithium-Thionyl-Chloride***

Individual Cell Lithium Mass: ***0.66 grams***

Cell Installation Method: ***3 cells, permanently installed, non-serviceable***

IATA Regulated Packing Instruction: ***PI 970, Section 2***

Battery manufacturer's MSDS and Transport Certificate included in Appendix F.

GEOFORCE

© Geoforce Inc., All Rights Reserved

Appendix B: Wireless/Environmental Regulatory Guidance

RF Radiation Exposure Statement

This equipment complies with FCC radiation exposure limits set forth for an uncontrolled environment. End users must follow the specific operating instructions for satisfying RF exposure compliance. The antenna(s) used for this transmitter must be installed to provide a separation distance of at least 20 cm from all persons and must not be co-located or operating in conjunction with any other antenna or transmitter.

RF/Environmental Certifications

- Certified to FCC and CE emissions, immunity, and safety regulations
- Meets FCC Part 15 and 25 regulations, Canada type approval, CISPR Publication 22 (2009) & R&TTE Directive (1999/EC)
- ROHS and WEEE compliant

CE 1313 ⓘ

FC NOM N23156 ANATEL PENDING (01)07898994327615 RoHS IP68 10 m 33 ft IP69K

Regulatory Notices

FCC Part 15/25

Changes or modifications not expressly approved by the party responsible for compliance could void the user's authority to operate the equipment. The manufacturer is not responsible for any radio or TV interference caused by un-authorized modifications to this equipment. Such modifications could void the user's authority to operate the equipment.

NOTE: This equipment has been tested and found to comply with the limits for a Class B digital device, pursuant to part 15 of the FCC Rules. These limits are designed to provide reasonable protection against harmful interference in a residential installation. This equipment generates uses and can radiate radio frequency energy and, if not installed and used in accordance with the instructions, may cause harmful interference to radio communications. However, there is no guarantee that interference will not occur in a particular installation. If this equipment does cause harmful interference to radio or television reception, which can be determined by turning the equipment off and on, the user is encouraged to try to correct the interference by one or more of the following measures:

—Reorient or relocate the receiving antenna.
—Increase the separation between the equipment and receiver.
—Connect the equipment into an outlet on a circuit different from that to which the receiver is connected.
—Consult the dealer or an experienced radio/ TV technician for help.

NOTE: This device complies with part 15 of the FCC Rules. Operation is subject to the following two conditions: (1) This device may not cause harmful interference, and (2) this device must accept any interference received, including interference that may cause undesired operation.

This device complies with the requirements for radio astronomy site avoidance as specified by the Globalstar National Science Foundation agreement of 2001. It is compliant with CFR 25.213.

This device automatically adjusts to transmission frequency according to its location and is compliant with international regulatory requirements.

© Geoforce Inc., All Rights Reserved

Regulatory Notices

ICES-003

Under Industry Canada regulations, this radio transmitter may only operate using an antenna of a type and maximum (or lesser) gain approved for the transmitter by Industry Canada. To reduce potential radio interference to other users, the antenna type and its gain should be so chosen that the equivalent isotropically radiated power (EIRP) is not more than that necessary for successful communication.

Conformément à la réglementation d'Industrie Canada, le présent émetteur radio peut fonctionner avec une antenne d'un type et d'un gain maximal (ou inférieur) approuvé pour l'émetteur par Industrie Canada. Dans le but de réduire les risques de brouillage radioélectrique à l'intention des autres utilisateurs, il faut choisir le type d'antenne et son gain de sorte que la puissance isotrope rayonnée équivalente (p.i.r.e.) ne dépasse pas l'intensité nécessaire à l'établissement d'une communication satisfaisante.

This Class B digital apparatus complies with Canadian ICES-003.

Cet appareil numérique de la classe B est conforme à la norme NMB-003 du Canada.

This device complies with Industry Canada license-exempt RSS standard(s). Operation is subject to the following two conditions: (1) this device may not cause interference, and (2) this device must accept any interference, including interference that may cause undesired operation of the device.

Le présent appareil est conforme aux CNR d'Industrie Canada applicables aux appareils radio exempts de licence. L'exploitation est autorisée aux deux conditions suivantes : (1) l'appareil ne doit pas produire de brouillage, et (2) l'utilisateur de l'appareil doit accepter tout brouillage radioélectrique subi, même si le brouillage est susceptible d'en compromettre le fonctionnement.

ANATEL

ANATEL HOMOLOGATION N°: PENDING

GS1 BRAZIL ID: (01)07898994327615

ESTE EQUIPAMENTO OPERA EM CARÁTER SECUNDÁRIO, ISTO É, NÃO TEM DIREITO A PROTEÇÃO CONTRA INTERFERÊNCIA PREJUDICIAL, MESMO DE ESTAÇÕES DO MESMO TIPO, E NÃO PODE CAUSAR INTERFERÊNCIA A SISTEMAS OPERANDO EM CARÁTER PRIMÁRIO.

IFETEL/NOM-121

NOM-121 CERTIFICATE N°: PENDING

IFETEL HOMOLOGATION N°: RCSGEGT-PENDING

LA OPERACIÓN DE ESTE EQUIPO ESTÁ SUJETA A LAS SIGUIENTES DOS CONDICIONES: (1) ES POSIBLE QUE ESTE EQUIPO O DISPOSITIVO NO CAUSE INTERFERENCIA PERJUDICIAL Y (2) ESTE EQUIPO O DISPOSITIVO DEBE ACEPTAR CUALQUIER INTERFERENCIA, INCLUYENDO LA QUE PUEDA CAUSAR SU OPERACIÓN NO DESEADA.

RoHS (2002/95/EC), WEEE (2012/19/EU)

The Geoforce GT0 is laser inscribed with the Restriction of Hazardous Substances (RoHS) Directive compliance symbol. This signifies that all Geoforce GT0 units are RoHS compliant for restricted and hazardous substances.

*The Geoforce GT0 is laser inscribed with the Waste Electrical and Electronic Equipment (WEEE) disposal symbol and is classified in the WEEE Directive as **Category 9 EEE: Monitoring and Control Instruments**. This signifies that all Geoforce GT0 units are classified as Electrical and Electronic Equipment (EEE) and should NOT be disposed of in municipal waste areas. All local regulations must be followed in the disposal and disposition process of EEE.*

Disposal Notices

WEEE

WARNING: DO NOT DISPOSE OF IN MUNICIPLE WASTE AREAS.

© Geoforce Inc., All Rights Reserved

Appendix C: Safety Regulatory Guidance

Ordinary Location Certifications

Intertek
4008611

Conforms to:

IEC 60950-1:2005 (for ordinary locations safety)
EN 60950-1: 2006 (for ordinary locations safety)
ANSI / UL 60950-1: 2005 (for ordinary locations safety)
IEC 60950-22:2005 (for ordinary locations safety)
EN 60950-22: 2006 (for ordinary locations safety)
ANSI / UL 60950-22: 2005 (for ordinary locations safety)

Certified to:

CAN / CSA C22.2 No. 60950-1-03 (for ordinary locations safety)
CAN / CSA C22.2 No. 60950-22-03 (for ordinary locations safety)

GEOFORCE

© Geoforce Inc., All Rights Reserved

Appendix D: Power-down Guidance

GT0 OFF and Radio Silent Mode 01

To put the GT0 in an OFF state:

1) Insert and leave the GT0 control magnet in the magnet slot on the GT0 upper housing.

This magnet insertion aborts any ongoing radio message event and prevents any new radio message events from starting. This is equivalent to the OFF state.

NOTE: The BLE low-power communications interface remains active during this state.

NOTE: Press magnet lanyard firmly into the magnet slot to ensure it is fully inserted and will not fall out.

GEOFORCE

© Geoforce Inc., All Rights Reserved

Appendix E: General Notices

Warranty Statement

Limited Hardware Warranty. Subject to the limitations set forth in the Geoforce Standard Service Agreement, Geoforce warrants that for one (1) year from that date that Geoforce submits an invoice for such Hardware (the "Warranty Period"), Hardware provided with the Service or purchased from Geoforce will be free of defects in materials and workmanship when installed, operated, and serviced in strict accordance with Geoforce's and the manufacturer's requirements. If Hardware fails to operate because of a defect in materials or workmanship within the Warranty Period, Geoforce will, at its sole option and at no charge to Buyer, repair or replace it or arrange for its repair or replacement. Customer is responsible for removal and replacement of failed hardware and shall return failed hardware to Geoforce within 30 days. THE WARRANTY SET FORTH ABOVE FURTHERMORE DOES NOT COVER (A) HARDWARE THAT HAS BEEN TAMPERED WITH OR SERVICED WITHOUT SELLER'S AUTHORIZATION; (B) HARDWARE THAT HAS BEEN LOST OR STOLEN; (C) HARDWARE THAT IS DESIGNED TO BE CONSUMABLE OR NON-SERVICABLE SUCH AS BATTERIES; OR D) HARDWARE SUBJECTED TO ABUSE, MISUSE, NEGLECT OR HOSTILE OPERATING ENVIRONMENTS.

Notices

Copyright by Geoforce Inc.
While this information is presented in good faith and believed to be accurate, Geoforce disclaims the implied warranties of merchantability and fitness for a particular purpose and makes no express warranties except as may be stated in its written agreement with and for its customers. In no event is Geoforce liable to anyone for any indirect, special or consequential damages. The information and specifications in this document are subject to change without notice.

GEOFORCE

© Geoforce Inc., All Rights Reserved

Appendix F: Supporting Documentation

GT0 Documentation

1) Battery Manufacturer's Transport Certificate
2) Battery Manufacturer's MSDS

GEOFORCE

© Geoforce Inc., All Rights Reserved