Installation Manual

MM101259V1 R1A

JAGUAR™ 725M Mobile Radio

TABLE OF CONTENTS

SAFETY INFORMATION **3**
SAFETY TRAINING INFORMATION **4**
INTRODUCTION **6**
UNPACKING AND CHECKING EQUIPMENT **7**
PLANNING THE INSTALLATION **10**
EQUIPMENT REQUIRED **12**
INSTALLATION **13**
RUNNING CABLES 13
Power Cable 14
Accessory Cable 15
Ignition Sense (All Applications) 17
Control Cable (Remote Mount Only) 19
CONTROL UNIT MOUNTING 19
SPEAKER 21
MICROPHONE HANGER AND/OR HOOKSWITCH MOUNTING21
SIREN & LIGHT 22
RADIO MOUNTING AND FINAL HOOK-UP 23
Front Mount 23
Remote Mount Installation 25
DUAL CONTROL UNITS **29**
PRE-INSTALLATION PROGRAMMING PROCEDURE WITH PC PROGRAMMER - FRONT MOUNT 29
PRE-INSTALLATION PROGRAMMING PROCEDURE WITH PC PROGRAMMER - REMOTE MOUNT 32
INSTALLATION INSTRUCTIONS FOR FRONT MOUNT DUAL CONTROL UNITS 35
INSTALLATION INSTRUCTIONS FOR REMOTE MOUNT DUAL CONTROL UNITS 37
FIELD PROGRAMMING WITH PC PROGRAMMER – DUAL CONTROL UNITS 41
Field Programming Procedure for Front Mount Dual Control Units 41
Field Programming Procedure for Remote Mount Dual Control Units 43
DUAL RADIO UNITS **46**
PRE-INSTALLATION PROGRAMMING PROCEDURE WITH PC PROGRAMMER – DUAL RADIO UNITS 46

This manual is published by **M/A-COM Private Radio Systems, Inc.**, without any warranty. Improvements and changes to this manual necessitated by typographical errors, inaccuracies of current information, or improvements to programs and/or equipment, may be made by **M/A-COM Private Radio Systems, Inc.**, at any time and without notice. Such changes will be incorporated into new editions of this manual. No part of this manual may be reproduced or transmitted in any form or by any means, electronic or mechanical, including photocopying and recording, for any purpose, without the express written permission of **M/A-COM Private Radio Systems, Inc.**

Copyright© 2001 M/A-COM Private Radio Systems, Inc. All rights reserved.

SAFETY INFORMATION

The operator of any mobile radio should be aware of certain hazards common to the operation of vehicular radio transmissions. **A list of several possible hazards is given:**

1. **Explosive Atmospheres** - Just as it is dangerous to fuel a vehicle with the motor running, similar hazards exist when operating a mobile radio, be sure to turn the radio off while fueling the vehicle. Do not carry containers of fuel in the trunk of the vehicle if the radio is mounted in the trunk.

2. **Interference to Vehicular Electronics Systems** - Electronic fuel injection systems, electronic anti-skid braking systems, electronic cruise control systems, etc., are typical electronic systems that may malfunction due to the lack of protection from radio frequency energy present when transmitting. If the vehicle contains such equipment, consult the dealer and enlist their aid in determining the expected performance of electronic circuits when the radio is transmitting.

3. **Dynamite Blasting Caps** - Dynamite blasting caps may be caused to explode by operating a radio within 500 feet of the blasting caps. Always obey the **"Turn Off Two-Way Radios"** signs posted where dynamite is being used.

   When transporting blasting caps in your vehicle:

   A. Carry the blasting caps in a closed metal box with a soft lining.

   B. Leave the radio OFF whenever the blasting caps are being put into or removed from the vehicle.

4. **Liquefied Petroleum (LP) Gas Powered Vehicles** - Mobile radio installations in vehicles powered by liquefied petroleum gas with the LP gas container in the trunk or other sealed-off space within the interior of the vehicle must conform to the National Fire Protection Association standard (NFPA) 58 requiring:

   A. The space containing the radio equipment shall be isolated by a seal from the space containing the LP gas container and its fittings.

   B. Outside filling connections shall be used for the LP gas container.

   C. The LP gas container shall be vented to the outside of the vehicle.

SAFETY TRAINING INFORMATION

Your M/A-COM radio generates RF electromagnetic energy during transmit mode. This radio is designed for and classified as "Occupational Use Only," meaning it must be used only during the course of employment by individuals aware of the hazards and the ways to minimize such hazards. This radio is NOT intended for use by the "General Population" in an uncontrolled environment.

This radio has been tested and complies with the FCC RF exposure limits for "Occupational Use Only." In addition, your M/A-COM radio complies with the following Standards and Guidelines with regard to RF energy and electromagnetic energy levels and evaluation of such levels for exposure to humans:

- FCC OET Bulletin 65 Edition 97-01 Supplement C, Evaluating Compliance with FCC Guidelines for Human Exposure to Radio Frequency Electromagnetic Fields.
- American National Standards Institute (C95.1 – 1992), IEEE Standard for Safety Levels with Respect to Human Exposure to Radio Frequency Electromagnetic Fields, 3 kHz to 300 GHz.
- American National Standards Institute (C95.3 – 1992), IEEE Recommended Practice for the Measurement of Potentially Hazardous Electromagnetic Fields – RF and Microwave.

To ensure that your exposure to RF electromagnetic energy is within the FCC allowable limits for occupational use, always adhere to the following guidelines:

- DO NOT operate the radio without a proper antenna attached, as this may damage the radio, and may also cause you to exceed FCC RF exposure limits. A proper antenna is the antenna supplied with this radio or an antenna specifically authorized by M/A-COM for use with this radio.
- DO NOT transmit for more than 50% of total radio use time (50% duty cycle). Transmitting more than 50% of the time can cause FCC RF exposure compliance requirements to be exceeded. The radio is transmitting when the "TX" LED in the radio's display is

illuminated. Pressing the “PTT” button on the microphone will cause the radio to transmit.

- ALWAYS use M/A-COM authorized accessories (antennas, speaker/mics, etc.). Use of unauthorized accessories may cause the FCC Occupational/Controlled Exposure RF compliance requirements to be exceeded.
- ALWAYS keep at least 20 cm (8 inches) between the antenna and user/bystanders while transmitting. This radio has been tested and found to be compliant with Specific Absorption Rate (SAR) limits for uncontrolled exposure at a distance of 20 cm (8 inches) or more using a 50% duty cycle.

The information listed above is provided to make the user aware of an RF exposure and what to do to assure that this radio operates within the FCC RF exposure limits of this radio.

INTRODUCTION

This manual contains installation instructions for the JAGUAR 725M Mobile Radio Unit and associated accessories. These instructions cover the mounting and cabling of the radio; interconnection and wiring diagrams are provided for reference. Before installation the radio should be programmed using an IBM-compatible personal computer and the following items:

Programming Cable	TQ3377
ProGrammer PC Software	TQ3385
	or
Conventional ProGrammer PC Software	TQ3389

UNPACKING AND CHECKING EQUIPMENT

Carefully unpack the radio and identify each item in the shipping container as listed below. If damage has occurred to the equipment during shipment, file a claim with the carrier immediately. The available options for the JAGUAR 725M Mobile Radio are covered in Table 1.

- JAGUAR 725M Mobile Radio Unit
- Microphone HBMC3Z or HBMC5L
- Speaker HBLS1H or HBLS1U
- Power Cable HBCF9A
- Control Cable HBCG5R or HBCE5S
- Front Mount Bracket Kit HBMAxx
  or
- Remote Mount Kit HBMAxx
  with
- Control Unit Mount Kit HBMA3J
- Operator's Manual MM101258V1
- Installation Manual MM101259V1

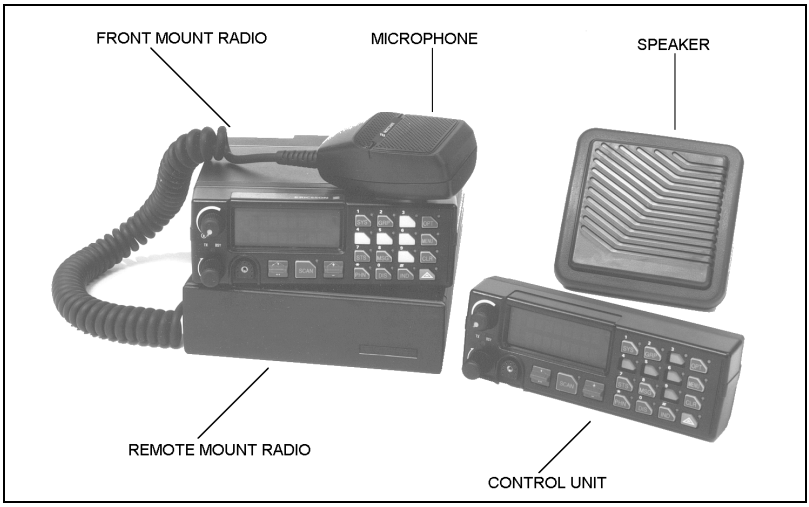

Figure 1 - JAGUAR 725M Mobile Radio Components and Mounting Hardware

Figure 2 – Rear Angle View of Radio

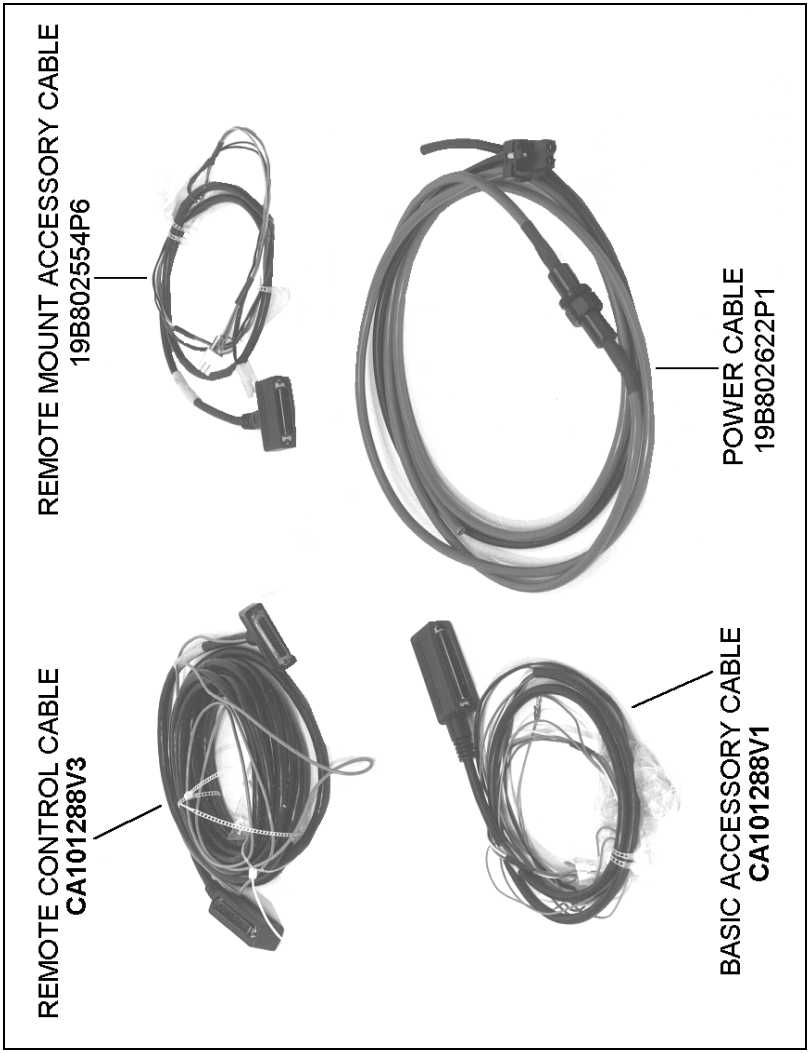

Figure 3 - Cables

Table 1 - JAGUAR 725M Mobile Radio Optional Accessories

Option	Description	Part Number
HBAN1L	800MHz ¼ Wave Whip Antenna	19B209568P5
HBCF9A	Power Cable	19B802622P3
FRONT MOUNT		
HBCE5R	Extended Option Accessory Cable	CA101288V2
REMOTE MOUNT		
HBCE5S	Extended Option Control Cable	CA101288V4
HBCE5T	Extended Option Accessory Cable	19B802554P7
DUAL CONTROL		
HBCE5Z	Dual Control Cable, Remote 9.0m	19B802554P9
DUAL RADIO		
HBCE7A	Dual Radio Cable, Remote 2.0m	CA101288V10
HBCLxx	Dual Radio Extension Cable for Field Programming, Keyloading, and Mobile Data Applications	CA101288V30
HBMA3J	Mounting Bracket Kit, Remote Control Unit	344A4584G2
HBMAxx	Mounting Bracket Kit, Front Mount Radio	
HBMAxx	Mounting Bracket Kit, Remote Mount Radio	
HBMK3E	Keycap Kit, Scan Control Unit	19C852359P101
HBMK3F	Keycap Kit, System Control Unit	19C852359P102
HBMN1A	Microphone Hanger	344A4678P1

PLANNING THE INSTALLATION

Figure 4 provides an example of a typical mobile radio remote mount installation. Before starting, plan the radio installation carefully so that it will be:

- safe for the operator and passengers,
- convenient for the operator to use,
- neat,
- protected from water damage,
- easy to service,
- out of the way of auto mechanics, and
- out of the way of passengers.

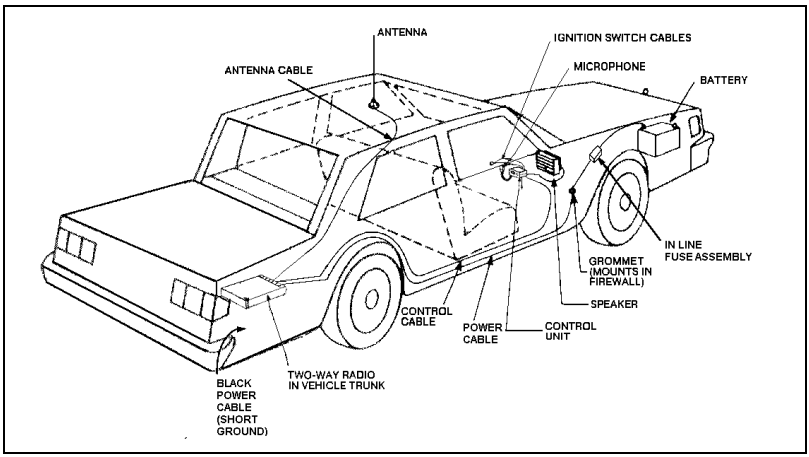

Figure 4 – Typical Installation (Remote Mount Shown)

It is suggested that the radio be installed by one of the many M/A-COM Authorized Service Centers located throughout the United States. These experienced service stations can provide a proper radio installation and make any final adjustments that may be needed.

Vehicular Electronics - Electronic fuel injection systems, electronic anti-skid braking systems, electronic cruise control systems, etc., are typical of the types of electronic devices which may be prone to malfunction due to the lack of protection from radio frequency energy present when a radio is transmitting. If the vehicle contains such equipment, consult the dealer to determine if such electronic equipment will perform normally when the radio is transmitting.

For passenger safety, mount the radio securely so that the unit will not break loose in the event of a collision. This is especially important in station wagons, vans and similar type installations where a loose radio could be extremely dangerous to the vehicle occupants.

EQUIPMENT REQUIRED

The equipment required for installing the JAGUAR 725M Mobile Radio is listed below:

- Crimping tool for fuse holder
- Electric drill for drilling mounting holes
- Drills and circle cutters, as follows:
  - No. 31 (1/8-inch) drill
  - No. 27 (9/64-inch) drill
  - 5/8-inch drill or circle cutter
  - 3/4-inch circle cutter, hole saw or socket punch
- Phillips and flat-blade screwdrivers
- POZIDRIV® driver
- No. 20 Torx® driver

Torx is a registered trademark of CAMCAR Division TEXTRON, Inc.
POZIDRIV is a registered trademark of Phillips International Company.

Be careful to avoid damaging some vital part (fuel tank, transmission housing, etc.) of the vehicle when drilling mounting holes. Always check to see how far the mounting screws will extend below the mounting surface before installing.

If pilot holes must be drilled, remove all metal shavings from drilling holes before installing screws.

INSTALLATION

RUNNING CABLES

To assure the feasibility of the planned cable routings, it is suggested that the cables be run before mounting the radio. The JAGUAR 725M mobile radio may be installed as a Front Mount or a Remote Mount. The type of mount, the application and the options to be installed should be considered when planning the cable runs. **Error! Reference source not found.** through Figure 6 provide Interconnection Diagrams for typical installations. **Error! Reference source not found.** through Figure 6 should be referenced throughout this manual and throughout the installation.

Be sure to leave some slack in each cable going to the radio so that the radio may be pulled out for servicing with the power applied and antenna attached. Coil any surplus cables and secure them out of the way. Try to route the cables away from locations where they will be exposed to heat (exhaust pipes, mufflers, tailpipes, etc.), battery acid, sharp edges or mechanical damage or where they will be a nuisance to automobile mechanics, the driver or passengers. Keep wiring away from electronic computer modules, other electronic modules and ignition circuits to help prevent interference to these components and radio equipment.

In addition, try to utilize existing holes in the firewall, trunk wall and the channels above or beneath doors. Channels through door and window columns that are convenient for running cables may also be used, unless rigid or flexible conduit is to be installed for cable runs.

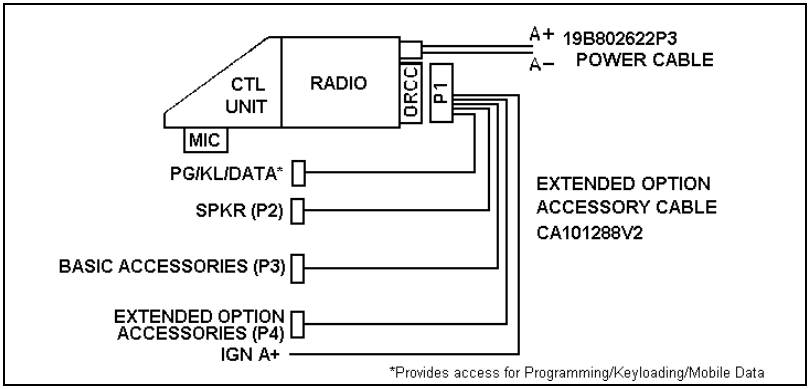

Figure 5 – Front Mount Extended Option Accessory Interconnections

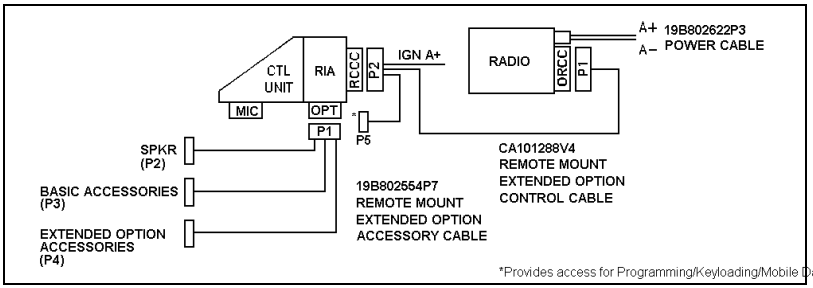

Figure 6 – Remote Mount Extended Option Accessory Interconnections

Power Cable

The power cable (19B802622P3) consists of a red lead A+ and a black lead A- connected to a molded 2-pin power connector and supplied with ring terminals (refer to Figure 7). To install the power cable:

1. Drill a 5/8-inch hole in the firewall for the cable run and insert the rubber grommet. Run the cable through this grommet to the battery location. Secure the cable at several locations within the engine compartment to prevent possible damage to cable.

2. Strip back the insulation approximately 3/8 of an inch from the end of the black lead. Slide one of the large heat shrink sleeves onto the wire and crimp a battery ring terminal onto this lead. Heat shrink the sleeve over the crimp connection. Connect the black lead directly to the battery negative (-) or ground frame member.

3. Cut off 12-18 inches from the red lead. Strip back the insulation approximately 3/8 of an inch on each end of the wires. Insert the

wire ends into the small openings at the end of each fuse holder section and crimp a fuse connector to each wire. Prepare the other end of the short wire in the same manner as in Step 2 of this procedure and connect to the positive (+) terminal of the battery.

NOTE

Do not install the fuse holder until the installation is completed and all connections have been checked.

NOTE

Power Cable 19B802622P3 is used only with radios with 50 watts or less RF power output.

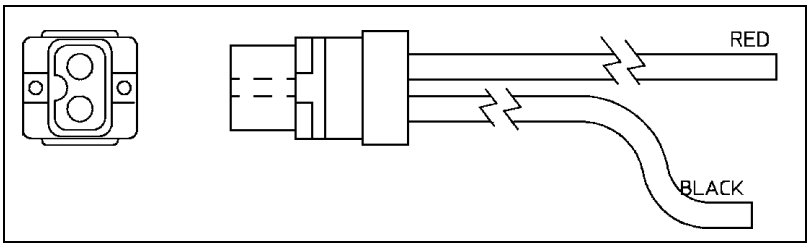

Figure 7 – Power Cable 19B802622P3

Accessory Cable

Front Mount

The Front Mount Extended Option Accessory Cable, at one end, consists of the extended options plug (P4); basic accessories connector (P3); connection for field programming, keyloading, and mobile data applications (P5); the speaker connector (P2); and the ignition sense lead. At the other end is plug P1. P1 connects to the Option/Remote Control Connector (ORCC) which is mounted on the back of the radio (refer to Figure 8).

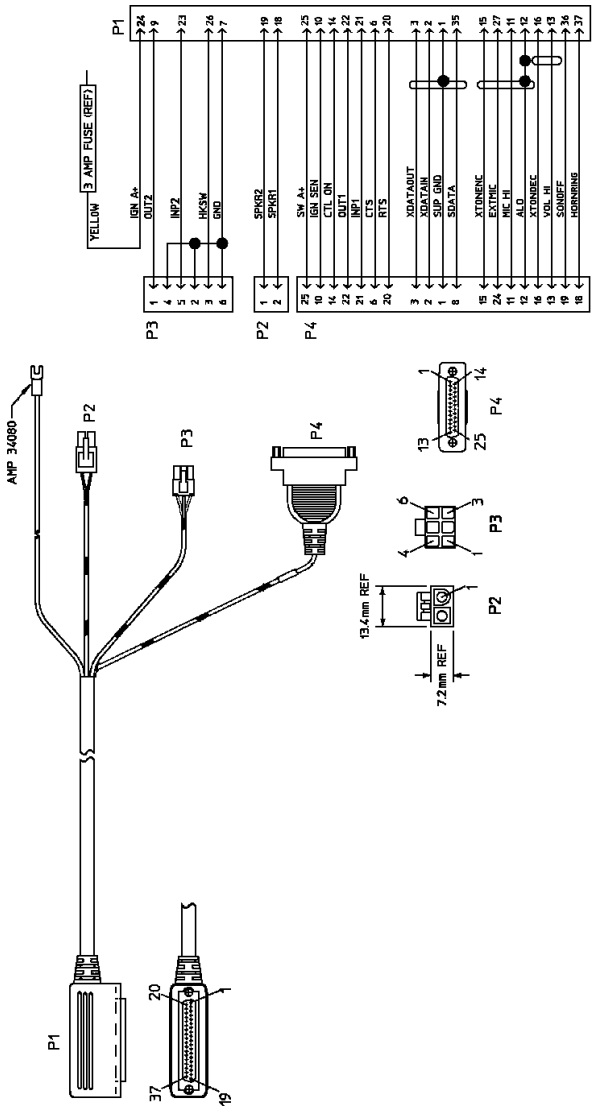

(19B802554, Sh.2, Rev. 23)

Figure 8 - Front Mount Extended Option Accessory Cable CA101288V2

Remote Mount

The Remote Mount Extended Option Accessory Cable, at one end, consists of the extended option plug (P4), the basic accessories connector (P3), and the speaker connector (P2). At the other end is the plug P1. P1

will connect to the Option Connector (OPT) which is mounted on the back of the Radio Interface Adapter (RIA). See Figure 9.

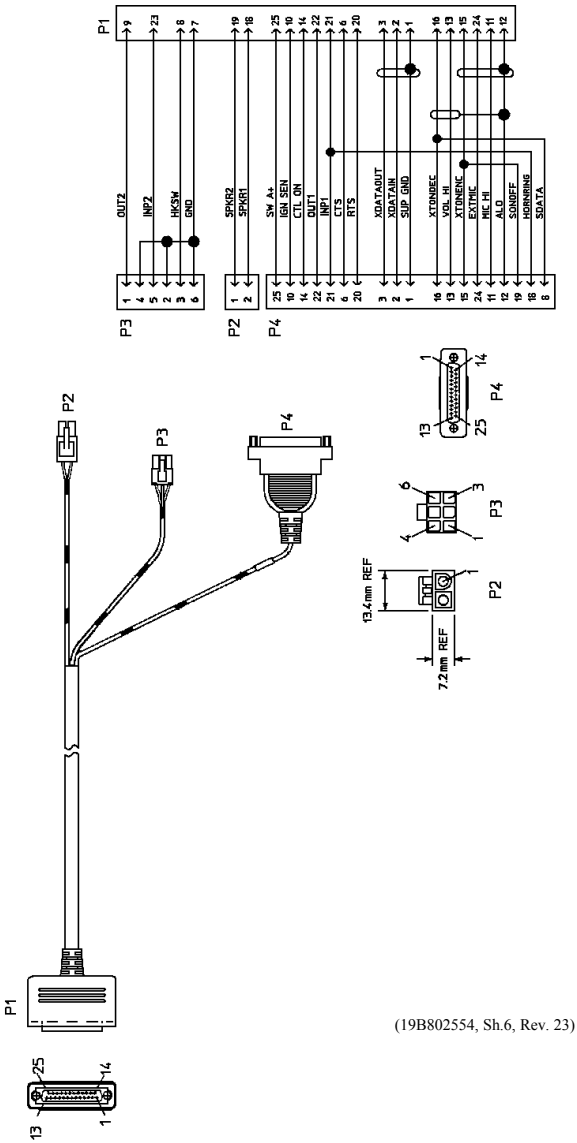

Figure 9 - Remote Mount Extended Option Accessory Cable 19B802554P7

<u>Ignition Sense (All Applications)</u>

NOTE

The radio, as shipped from the factory, has the "ignition sense" feature disabled. As such the radio will be powered ON or OFF as determined by the front panel ON/OFF/VOLUME control only (assuming A+ and A- are connected). If it is desired to enable the "ignition sense" feature, open the top cover of the radio and remove the shield from logic PWB. Slide switch SW601 from position 3-2 to 1-2. Replace shield and top cover. Be sure to apply correct torque to screws holding top cover in place. See Maintenance Manual.

NOTE

The "Accessory" point should drop to ZERO volts when cranking the engine and return to +12 volts after the engine is started. If a point is chosen that drops to a voltage between zero and +12 volts, the radio may execute a power-up cycle several times during start up. It is recommended that the terminal be measured with a voltmeter to be sure it shuts off (goes to zero volts) during the cranking of the engine.

The fuse holder must be attached to the yellow sense lead along with the ring terminal as follows:

1. Cut the yellow sense lead approximately 6-12" from the end that will be connected to the power source.
2. Strip the insulation from each end of the short lead and from the end of the long lead at least 3/8".
3. Insert the stripped end of the long lead and one end of the short lead into the narrow end of each fuse holder half.
4. Crimp the leads in the fuse holder halves with a crimping tool.
5. Insert the 3 amp fuse into one end of the fuse holder and join the two fuse holder halves firmly together.
6. Attach the ring terminal to the end of the short lead and connect this lead to the ignition "ON" sense point [preferably an "Accessory" point (in the vehicle fuse panel) that is switched on when the vehicle ignition switch is in the ACCESSORY and RUN positions].

CAUTION

Certain problems may be encountered when accessory equipment is connected to the ignition or accessory lines of the vehicle, where these lines may have large filter capacitors and a leakage path present. If the radio does not turn off within a reasonable amount of time after the ignition is turned off, first try a different accessory or ignition sense pick up point in the vehicle. Many vehicles have more than one circuit that is switched by the ignition switch, and one may be available that does not have large filter capacitors or a leakage path present.

If a different pickup point cannot be found, add a 470-ohm, 1-watt resistor from the ignition sense pick point to ground. This will discharge the capacitor(s) or reduce the leakage voltage to a low value. Current drain through this resistor will be minimal (less than 0.03A) when the ignition is switched on.

Control Cable (Remote Mount Only)

The Control Cable is used to connect the Control Unit (through the RIA) to the Radio Transceiver in remote applications. Plug P2, at one end, connects to the Remote Control Cable Connector (RCCC) mounted on the back of the RIA. The Ignition Sense wire is also part of P2. The connection, P5, is available for field programming, keyloading, or mobile data applications. The other end of the Control Cable (P1) connects to the ORCC mounted on the back of the radio. See Figure 10.

CONTROL UNIT MOUNTING

(Remote Applications Only)

1. Using the bracket as a template, mark and drill the mounting holes. Be sure to leave enough room at the rear of the control unit for the cable connector. Refer to Figure 11 for control unit mounting bracket installation.
2. Secure the mounting bracket using the four No. 10 x 3/4 self-tapping screws supplied (use No. 10 x 1-1/2 if needed.).
3. Secure the control unit to the bracket with the two 1/4-20 x 5/8 hex head screws and lock washers provided.

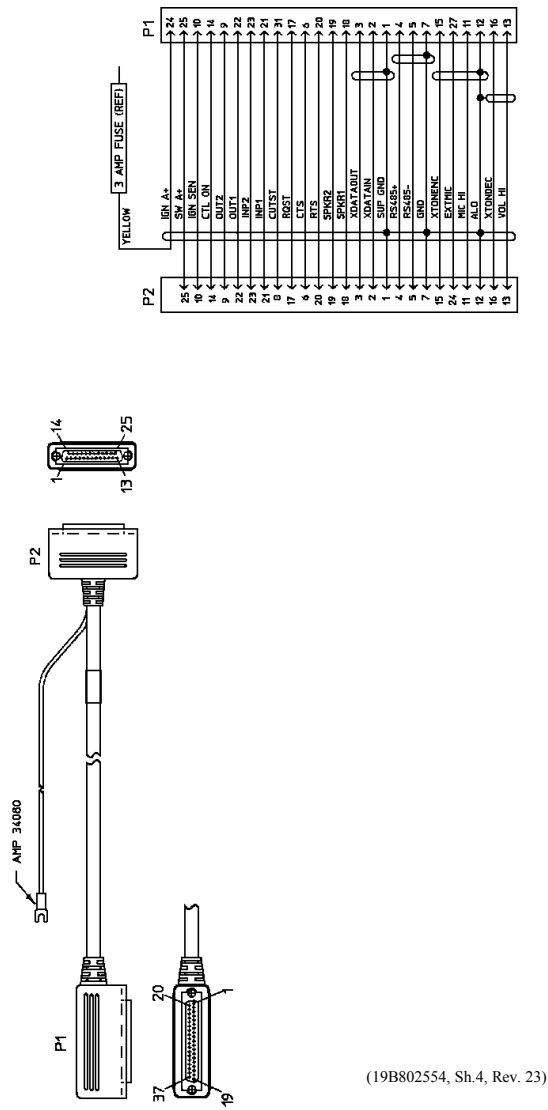

Figure 10 – Remote Extended Option Control Cable (CA101288V4)

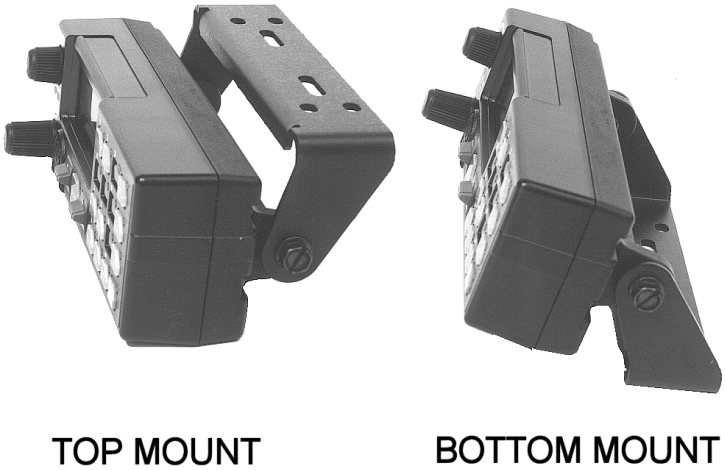

Figure 11 – Control Unit Mounting Bracket Installation

SPEAKER

The speaker kit includes the speaker, mounting bracket and connecting cable. Mount the speaker so it is directed to the operator but does not present a hazard in the event of an accident. The speaker may be mounted on the lower edge of the instrument panel, the firewall or above the windshield in some trucks.

1. Use the mounting bracket as a template for locating the mounting holes and mount the speaker as shown in Figure 12.
2. Refer to the applicable installation procedures for connection of the speaker to the accessory cable.

MICROPHONE HANGER AND/OR HOOKSWITCH MOUNTING

The microphone hanger or hookswitch should be mounted in a location convenient to the operator where it will not interfere with the safe operation of the vehicle or be a hazard to the vehicle passengers. The hanger or hookswitch is designed to be mounted with the open end of the mounting button slot pointed upward. Use the hanger or hookswitch as a template to mark and drill the mounting holes. Mount the hanger or hookswitch with the self-tapping screws provided.

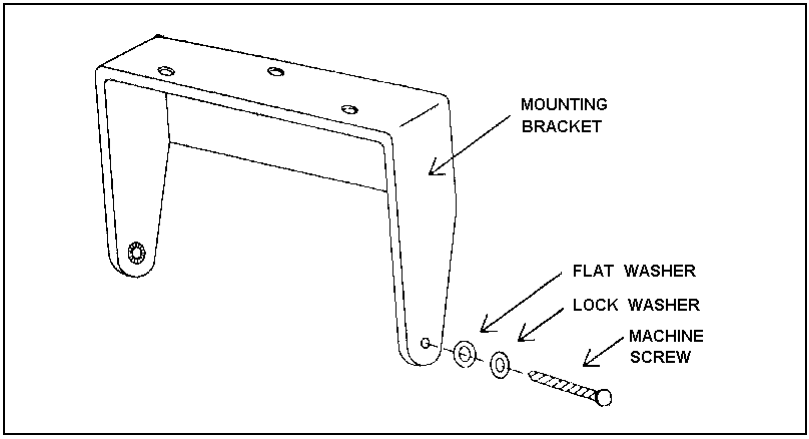

Figure 12 – Speaker Mounting

SIREN & LIGHT

For instructions about installing the Federal Signal Corporation Siren & Light Kit, refer to the Federal Signal Corporation Installation Instructions (Federal Systems part number 255287B, rev. B or higher).

Program the JAGUAR 725M mobile radio to work with the Federal Systems Siren & Light Kit, using the instructions outlined in the ProGrammer On-Line Help.

NOTE: The following issues have been reported on some JAGUAR 725M Siren/Light installations using the Federal Signal Corporation Siren & Light Kit:

- Occasional false activation of siren & light functions when the ignition is turned to the "on" position and/or when the vehicle is started.
- Occasional failure to enable siren or light functions via control head, which can be temporarily resolved by either power cycling the JAGUAR 725M radio or turning the car ignition "off" and then "on" again.

To resolve these issues above, modify the Federal Systems control cable as follows:

1. Remove the outer shell from the DB25 side of the Federal Systems control cable.
2. Add a jumper from pin 1 to pin 19.

This modification to the SS2000 cable harness will disable the JAGUAR 725M capability to turn on and off the SS2000 from the front of the control head. The SS2000 will now be turned on and off strictly by its

own ignition switch trigger line (red wire from 12 pin Molex connector on SS2000 siren box). Follow the SS2000 Federal Signal installation instructions to attach the red ignition line correctly.

RADIO MOUNTING AND FINAL HOOK-UP

Front Mount

Typically the bracket shown in Figure 13 is used for Front Mount applications. The bracket can be mounted so that it is either above or below the radio for the user's convenience. The bracket pictured in Figure 11 can also be used for Remote Mount applications. The following instructions are for a Front Mount installation using the bracket shown in Figure 13.

1. Use the supplied mounting bracket as a template to locate the position for each of the drill holes. Be sure to leave enough room at the front and rear of the radio for cable connections. Drill No. 27 (9/64) pilot holes.
2. Mount bracket with four 1/4"-14 x 3/4" sheet metal screws (use 1/4"-14 x 1-1/2" screws if needed).
3. Place radio into mounting bracket and secure with the four M4 x 10 mm hex head screws, M4 flat washers and M4 lock washers supplied. No. 20 Torx.
4. Connect antenna coaxial cable to antenna connector (TNC).
5. Connect front mount accessory cable connector P1 to the Option/Remote Control Connector (ORCC) and secure with the two captive screws in the connector to the radio.

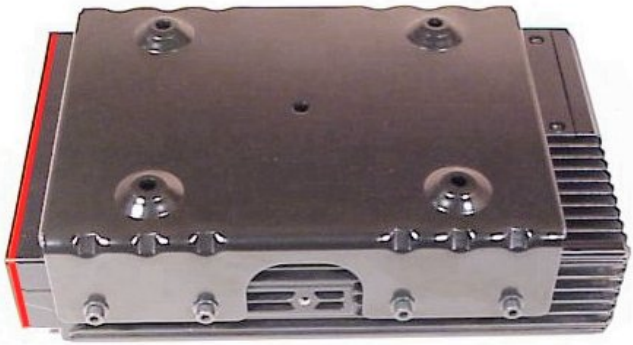

TOP MOUNT

Figure 13 – Mounting Bracket Installation

6. Connect front mount accessory cable connector P2 to speaker cable connector.
7. Connect power cable to power connector on rear of radio unit and secure with the two captive screws to the radio unit.
8. Connect the microphone connector to the connector on the front panel and secure with the captive screw.

NOTE

Do not torque microphone connector screw greater than 2 in-lb. Alternatively, finger tight plus 1/4 turn is acceptable.

9. If there are no other accessory connections, tie back plug P3 to main cable.
10. Recheck all connections before inserting fuse into transmit fuse assembly.

Remote Mount Installation

The bracket shown in

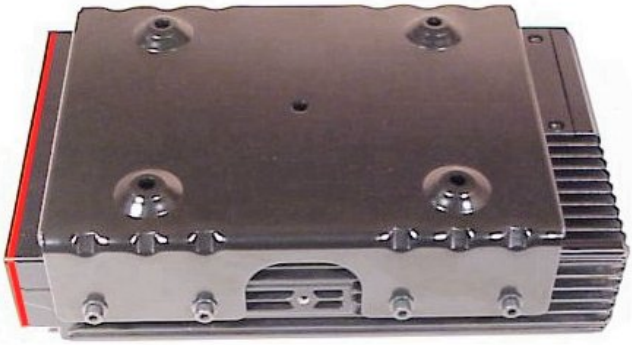

TOP MOUNT

BOTTOM MOUNT

Figure 14 is used for Remote Mounting. In some applications the bracket shown in Figure 13 can also be used for Remote Mounting. The following instructions are for a Remote Mount installation using the

bracket shown in

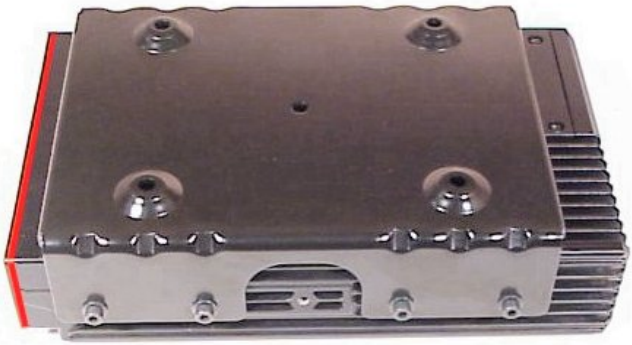

TOP MOUNT

BOTTOM MOUNT

Figure 14.

1. Using the bracket as a template, mark and drill the mounting holes using a No. 27 drill. Be sure to leave enough room at the rear of the radio unit for the cable connections.

2. Secure the mounting bracket using four 1/4"-14 x 3/4" sheet metal screws (use 1/4"-14 x 1" if needed.) The bracket can be used mounted so that it is either above or below the radio for the user's convenience.

3. Slide the radio unit into the bracket by aligning bracket guides with grooves on each side of radio (rear of radio should be inserted first). Slide radio back until screw holes in front of bracket align with screw

holes in side of radio. See

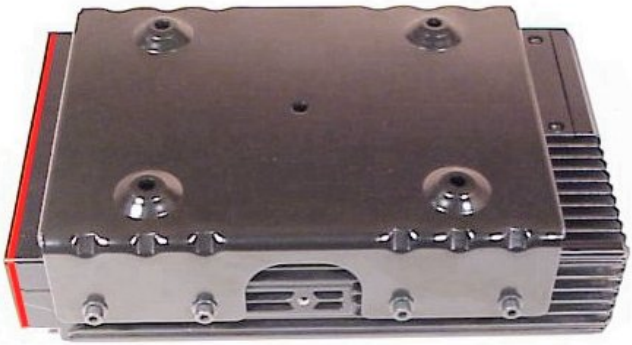

TOP MOUNT

BOTTOM MOUNT

Figure 14.

4. Secure radio to the bracket with two M4 x 10 mm socket head screws provided.
5. Connect antenna coaxial cable to antenna connector (TNC).
6. Connect remote control cable connector P1 to the ORCC connector on the radio unit and secure with the two captive screws.
7. Connect other end of remote control cable to the remote control cable connector (RCCC) on the remote control unit.
8. Connect remote mount accessory cable connector P1 to the option connector (OPT) on control unit. Then connect the speaker to connector P2 and accessory connector P3 to any options

(hookswitch, etc.). If connector P3 is not used, insulate and tie back to main cable.

9. Recheck all connections and cables. Insert fuse into transmit fuse assembly.

TOP MOUNT

BOTTOM MOUNT

Figure 14 – Remote Mounting Bracket Installation

DUAL CONTROL UNITS

The Dual Control feature can be configured for either front mount or for remote mount radio units. Each configuration provides for a Main Control Unit and an Auxiliary Control Unit. In the front mount configuration, the Main Control Unit is on the Radio Unit itself (see Fig. xx), with the Auxiliary Control Unit located in a convenient location. In the remote mount configuration, the Main Control Unit is typically located in the vehicle cab, with the Auxiliary Control Unit located in a convenient location (see Fig. xx).

All radio units and control units in the Dual Control configuration **MUST BE PROGRAMMED** prior to final installation. It is recommended that the units be first programmed at a Authorized Service Center, then transferred to the user's installation.

PRE-INSTALLATION PROGRAMMING PROCEDURE WITH PC PROGRAMMER - FRONT MOUNT

The Radio and Control Units must be programmed in a sequential procedure, in order to provide each Control Unit with the proper identification code.

1. Configure the JAGUAR 725M Front Mount Radio with the PC ProGrammer Assembly, as shown in Figure 31, Step 1. Program the radio with the following control configurations:

   Network Options

Dual Control	Enable
Audio Mode	Active
Switching Mode	Independent
Siren Light Controller	Unit A
Siren Light Connection	Unit A
Speaker	Disable
Multiple Radio	Disable

   Program Radio Setup

Mobile Options	Push Button

JAGUAR 725M Options

Write System Keypad File	Enable (System control unit)
Write Scan Keypad File	Enable (Scan control unit)
Personality Name <USERPERS>	User's personality file Radio Code OGXXXXX Latest radio code file (G13 or later vintage)
ADI Code	<SAME>
Radio Unit ID	<SAME>
Keypad File	<CUBMAP> Keypad definition for Control Unit B
CU ID (CU B)	Must be Control Unit B

2. Now configure the Front Mount Radio and the Auxiliary Control Unit together with PC ProGrammer, as shown in Figure 31, Step 2. Program this configuration with the following files:

Network Options

Dual Control	Enable
Audio Mode	Active
Switching Mode	Independent
Siren Light Controller	Unit A
Siren Light Connection	Unit A
Speaker	Disable
Multiple Radio	Disable

Program Radio Setup

Mobile Options	Push Button

J725M Options

Write System Keypad File	Enable (System control unit)
Write Scan Keypad File	Enable (Scan control unit)

Personality Name	<USERPERS>	User's personality file
Radio Code	<SAME>	
ADI Code	<SAME>	
Radio ID	<SAME>	

Keypad Files<CUAMAP>		Keypad definition for Control Unit A
CU ID	CU A	Must be Control Unit A

Note that the Main Control Unit has ID “B” and the Auxiliary Control Unit has ID “A” in this configuration.

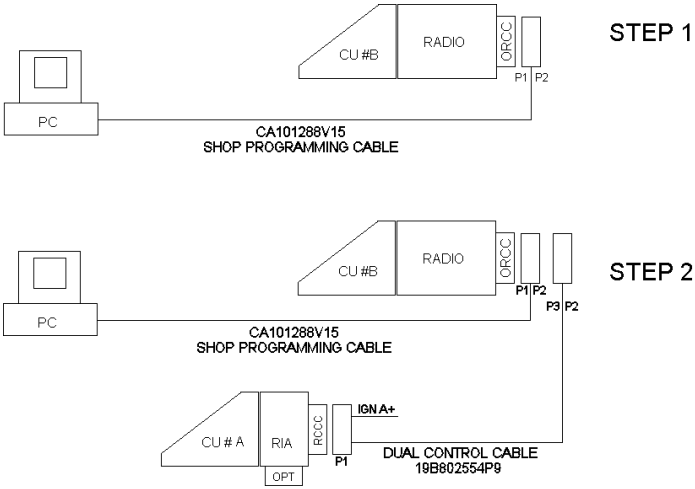

Figure 15 - J725M Dual Control Unit PC Programming Configuration

PRE-INSTALLATION PROGRAMMING PROCEDURE WITH PC PROGRAMMER - REMOTE MOUNT

The Radio and Control Units must be programmed in a sequential procedure, in order to provide each Control Unit with the proper identification code.

1. Configure the JAGUAR 725M Remote Mount Radio with the PC ProGrammer Assembly, as shown in Figure 32, Step 1. Program the radio with the following control configurations:

   Network Options

Dual Control	Enable
Audio Mode	Active
Switching Mode	Independent
Siren Light Controller	Unit A
Siren Light Connection	Unit A
Speaker	Disable
Multiple Radio	Disable

   Program Radio Setup

Mobile Options	Push Button

   J725M Options

Write System Keypad File	Enable (System control unit)
Write Scan Keypad File	Enable (Scan control unit)
Personality name <USERPERS>	User's personality file
Radio Code OGXXXXX	Latest radio code file (G13 or later vintage)
ADI Code	<SAME>
Radio Unit ID	<SAME>
Keypad File <CUBMAP>	Keypad definition for Control Unit B
CU ID CU B	Must be Control Unit B

2. Now configure the Remote Mount Radio and the Auxiliary Control Unit together with PC ProGrammer, as shown in Figure 32, Step 2. Program this configuration with the following files:

Network Options	
Dual Control	Enable
Audio Mode	Active
Switching Mode	Independent
Siren Light Controller	Unit A
Siren Light Connection	Unit A
Speaker	Disable
Multiple Radio	Disable
Program Radio Setup	
Mobile Options	Push Button
J725M Options	
Write System Keypad File	Enable (System control unit)
Write Scan Keypad File	Enable (Scan control unit)
Personality Name <USERPERS>	User's personality file
Radio Code	<SAME>
ADI Code	<SAME>
Radio ID	<SAME>
Keypad File <CUAMAP>	Keypad definition for Control Unit A
CU ID CU A	Must be Control Unit A

Note that the Main Control Unit has ID "A" and Auxiliary Control Unit has ID "B" in this configuration.

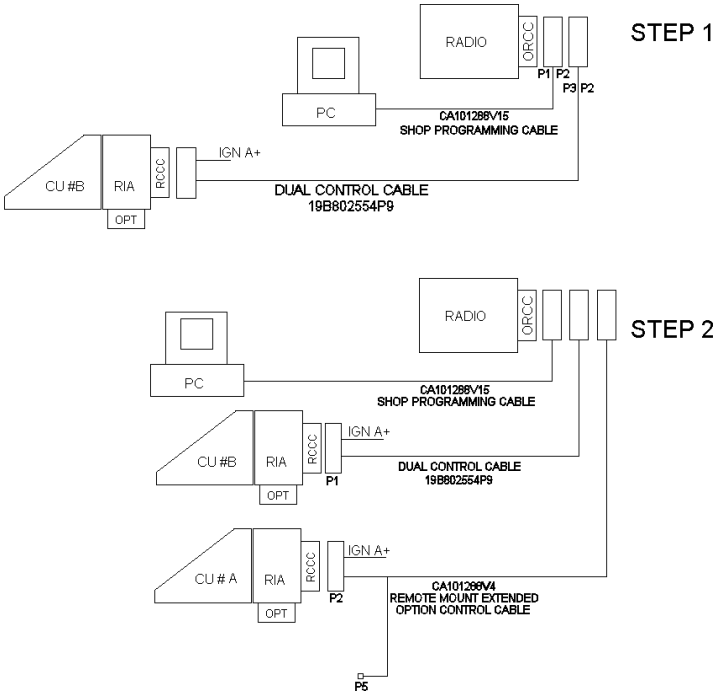

Figure 16 - J725M Dual Control Unit PC Programming Configuration Remote Mount

INSTALLATION INSTRUCTIONS FOR FRONT MOUNT DUAL CONTROL UNITS

The Dual Control Unit feature is configured such that only one control unit can be used for Extended Option accessories. **All Extended Option functions are only available at the Main Control Unit.**

1. Referring to Figure 33, run the Dual Control Cable (19B802554P9) between locations for the Radio Unit and Auxiliary Control Unit. Be sure to locate the P2/P3 connector assembly at the Radio Unit.
2. After installing Radio Unit mounting hardware in the normal fashion, connect the Dual Control Cable connector (P3) to the Radio Unit. Tighten the two jackscrews on P3. Next, connect the Accessory Cable (CA101288V2) Connector (P1) to the Dual Control Cable Connector (P2), and tighten the jackscrews on P2. Connect the power cable, and install Radio Unit in mounting bracket.
3. After installing the Auxiliary Control Unit in the normal fashion, connect the Dual Control Cable (P1) to Auxiliary Control Unit, and tighten jackscrews.
4. Connect the Remote Mount Accessory Cable (19B802554P7) to the Auxiliary Control Unit.
5. A yellow Ignition Sense lead is provided on the Dual Control Cable and the Front Mount Accessory Cable. If the **"Ignition Sense"** feature is enabled on the Radio Unit, it is necessary to connect only one of the yellow leads provided, whichever is convenient. Tape back the unused yellow lead (See Page 20 for details).
6. Install the Speakers in convenient locations near the Radio Unit and Auxiliary Control Unit.

Parallel Audio Installation Requirements

In special configurations that require both speakers to operate at the same time (simultaneous audio), install the speakers for parallel audio operation.

Refer to Fig xx for the Parallel Audio Setup Installation. Perform the following steps to install parallel audio speakers:

A. Use the two 8Ω speakers, part number 19A149590P12, in place of the two 4Ω speakers, part number 19A149590P11.

B. Hardwire each speaker directly (without relays) as shown in Figure 33.

NOTE

It is very important to use the correct speakers for this application, wiring 4 Ω speakers in this configuration may cause damage to the radio.

7. Install a relay (19A149299P1) from the kits supplied at a location near the leads from each speaker. For mounting, use the #8 X 3/4" sheetmetal screw and nutplate supplied with each kit.
8. At a convenient point cut one of the wires in each of the 2-wire speaker cables, spread the leads, and strip the ends. Crimp a 1/4" tab receptacle to each end.
9. Radio Unit Speaker: Connect the lead nearest the speaker to Pin 87A of the relay. Connect the lead nearest the connector to Pin 30 of the relay. Connect the connector to the Accessory Cable P2 (Refer to Figure 33).
10. Auxiliary Control Unit Speaker: Connect the lead nearest the speaker to Pin 87 of the relay. Connect the lead nearest the connector to Pin 30 of the relay. Connect the connector to the Accessory Cable P2 (Refer to Figure 33).
11. For each relay: Connect a #18 AWG black wire between the relay, Pin 85 and Accessory Cable P3-1 (labeled **"OUT2"** on the schematic diagrams in the service manual). Use a 1/4" tab receptacle on the relay side and mating Molex connector and pins on the accessory cable side. Connect the mating Molex connector to the Accessory Cable P3 when finished (Refer to Figure 33).
12. For each relay: Connect a #18 AWG red wire to the relay, Pin 86. Cut to length, and connect to the 1 amp fuse holder supplied. Use crimp on connectors supplied. Connect the other side of the 1 amp fuse holder to A+ battery source or vehicle A+ fuse block. Use #18 AWG red wire and ring lug supplied., if needed (See Figure 33).

13. Check dual control operation, using operator's manual as a test guide. In the PC programming software, make sure the "DUAL CONTROL SPEAKER is programmed **ACTIVE LOW**.

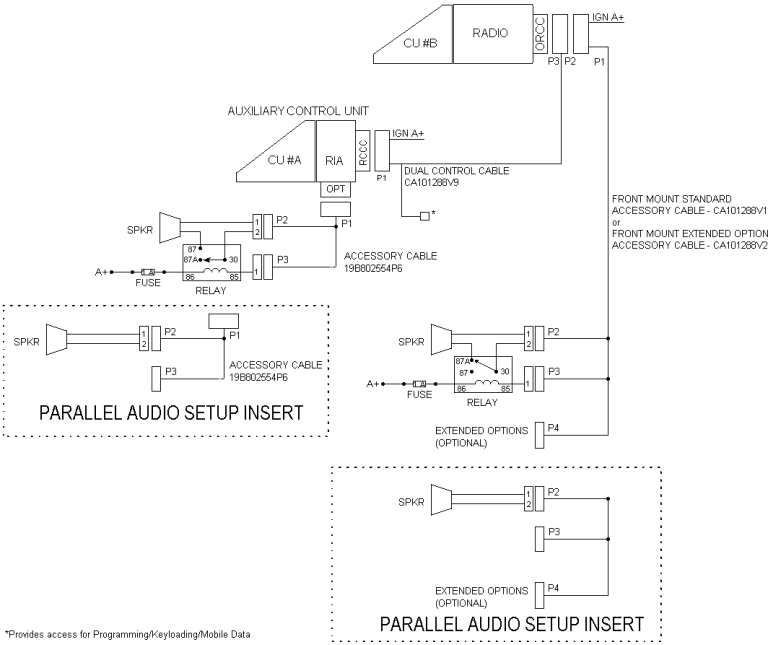

Figure 17 - J725M Dual Control Unit Front Mount/Remote Mount Installation Configuration

INSTALLATION INSTRUCTIONS FOR REMOTE MOUNT DUAL CONTROL UNITS

1. Referring to Figure 34, run the Remote Control Cable (CA101288V4) between locations for the Radio Unit and Main Control Unit.

2. Run the Dual Control Cable (19B802554P9) between locations for the Radio Unit and Auxiliary Control Unit. Be sure to locate the P2/P3 connector assembly at the radio unit.

3. After installing the Radio Unit in the normal fashion, connect the dual control cable connector (P3) to the Radio Unit. Tighten the two jackscrews on P3. Next, connect the Remote Control Cable connector (P1) to the Dual Control Cable connector (P2), and tighten jackscrews on P2.

4. After installing the Main Control Unit in the normal fashion, connect the Remote Control Cable (P2) to the Main Control Unit, and tighten jackscrews.
5. After installing the auxiliary control unit in the normal fashion, connect the Dual Control Cable (P1) to the Auxiliary Control Unit, and tighten jackscrews.
6. Connect the Remote Mount Extended Option Accessory Cable (19B802554P6) to the Auxiliary Control Unit and the Main Control Unit. **Please note: All extended option functions are only available at the Main Control Unit.**
7. A yellow ignition sense lead is provided on each control cable. If the **"Ignition Sense"** feature is enabled on the Radio Unit, it is necessary to connect only one of the yellow leads provided, whichever is convenient. Tape back the unused yellow lead. See page 20 for details.
8. Install the speakers in convenient locations near each control unit.

Parallel Audio Installation Requirements

In special configurations that require both speakers to operate at the same time (simultaneous audio), install the speakers for parallel audio operation.

Refer to Fig xx for the Parallel Audio Setup Installation. Perform the following steps to install parallel audio speakers:

A. Use the two 8Ω speakers, part number 19A149590P12, in place of the two 4Ω speakers, part number 19A149590P11.

B. Hardwire each speaker directly (without relays) as shown in Figure 33.

NOTE

It is very important to use the correct speakers for this application, wiring 4 Ω speakers in this configuration may cause damage to the radio.

9. Install a relay (19A149299P1) from the kits supplied at a location near the leads from each speaker. For mounting use the #8 X 3/4" sheetmetal screw and nutplate supplied with each kit.
10. At a convenient point cut one of the wires in each of the 2-wire speaker cables, spread the leads, and strip the ends. (Crimp a 1/4" tab receptacle to each end.
11. Main Control Unit Speaker: Connect the lead nearest the speaker to Pin 87 of the relay. Connect the lead nearest the connector to Pin 30

of the relay. Connect connector to the accessory cable P2 (Refer to Figure 34).

12. Auxiliary Control Unit Speaker: Connect the lead nearest the speaker to Pin 87A of the relay. Connect the lead nearest the connector to Pin 30 of the relay. Connect the connector to accessory cable P2 (Refer to Figure 34).

13. For Each Relay: Connect a #18 AWG black wire between the relay, Pin 85 and accessory cable P3-1 (labeled **"OUT2"** on schematic diagrams in the service manual). Use a 1/4" tab receptacle on the relay side and a mating Molex connector and pins on the accessory cable side. Connect the mating Molex connector to the accessory cable P3 when finished (Refer to Figure 34).

14. For Each Relay: Connect one end of a #18 AWG red wire to the relay, Pin 86. Cut the lead to length, and connect the other end to the 1 amp fuse holder supplied. Use crimp on connectors supplied. Connect the other side of the 1 amp fuse holder to the A+ battery source or a vehicle A+ fuse block. Use a #18 AWG red wire and a ring lug supplied, if needed (Refer to Figure 34).

15. Check dual control operation, using the operator's manual as a test guide. In the PC programming software, make sure the "DUAL CONTROL SPEAKER" is programmed **ACTIVE HIGH**.

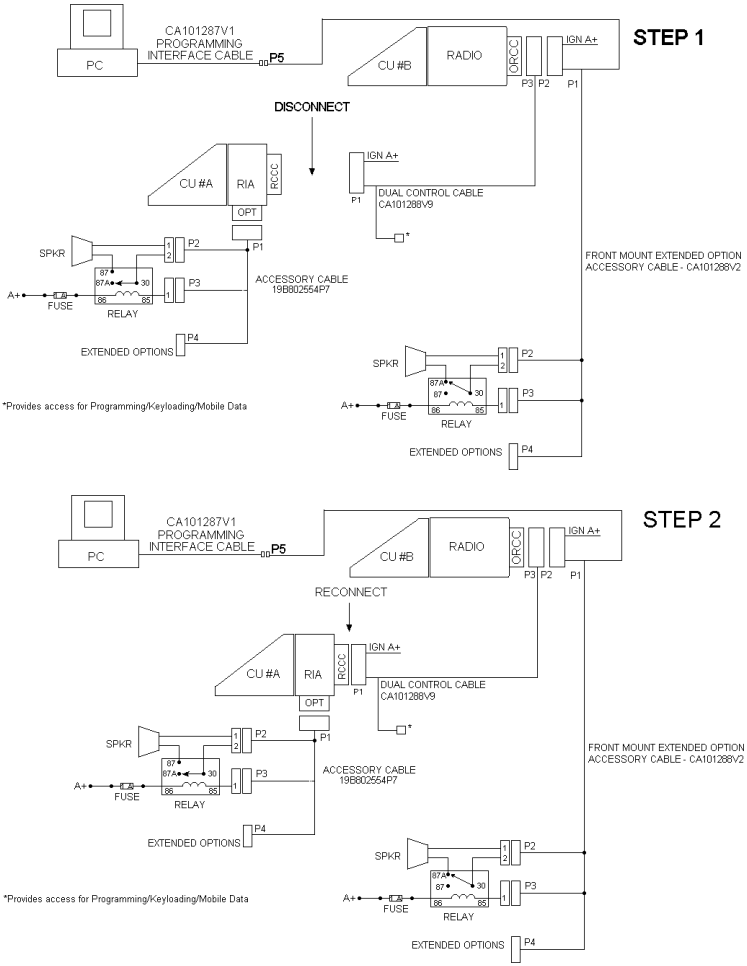

Figure 18 - JAGUAR 725M Dual Control Unit PC Programming Configuration Remote Mount

FIELD PROGRAMMING WITH PC PROGRAMMER – DUAL CONTROL UNITS

Once installed, the JAGUAR 725M can be programmed through connector P5 on the various cable assemblies, CA101288V2, V4, and V10.

Please note: Keyloading and Mobile Data functions are also available through the P5 connector on the cable assemblies mentioned above. Please follow the applicable instructions in the appropriate manuals for these applications.

Perform the following procedure for each installation configuration:

Field Programming Procedure for Front Mount Dual Control Units

The Radio and Control Units must be programmed in a sequential procedure in order to provide each Control Unit with the proper identification code.

1. Configure the JAGUAR 725M Front Mount Radio and the Auxiliary Control Unit with the PC ProGrammer Assembly as shown in Fig. Xx, Step 1. Program the radio with the control configurations shown in Step 1 of "Pre-Installation Programming Procedure with PC ProGrammer – Front Mount" and adjust as necessary for the specific application.

2. Now configure the Front Mount Radio and Auxiliary Control Unit together with the PC ProGrammer as shown in Fig. Xx, Step 2. Program the configurations shown in Step 2 of "Pre-Installation Programming Procedure with PC ProGrammer – Front Mount" and adjust as necessary for the specific application.

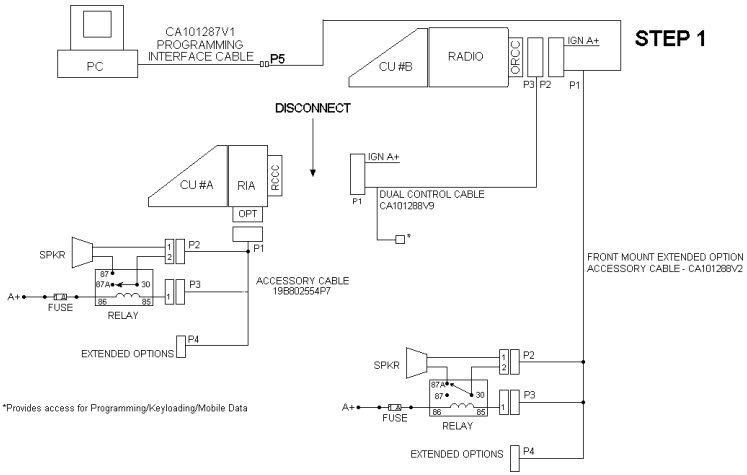

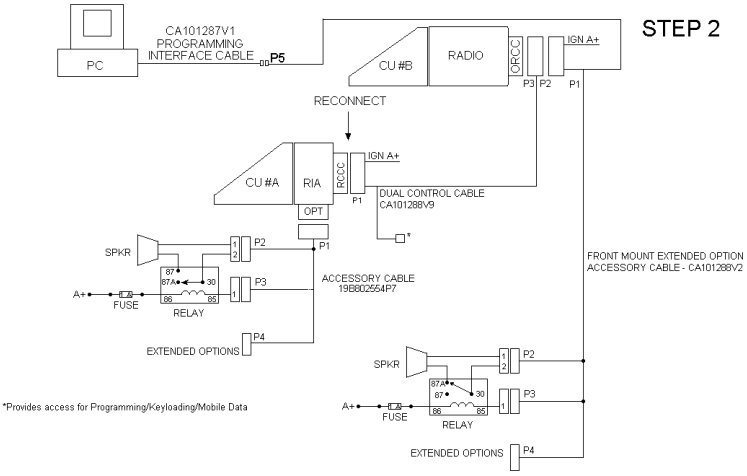

Figure 19 – J725M Field Programming – Dual Control Unit Front Mount/Remote Mount Configuration

Field Programming Procedure for Remote Mount Dual Control Units

The Radio and Control Units must be programmed in a sequential procedure in order to provide each Control Unit with the proper identification code.

1. Configure the JAGUAR 725M Remote Mount Radio with the PC ProGrammer Assembly as shown in Fig. Xx, Step 1 with CU #A disconnected. Program the radio with the control configurations shown in Step 1 of "Pre-Installation Programming Procedure with PC ProGrammer – Remote Mount" and adjust as necessary for the specific application.

2. Now configure the Remote Mount Radio and Auxiliary Control Unit together with the PC ProGrammer as shown in Fig. Xx, Step 2, reconnecting CU #A. Program the configurations shown in Step 2 of "Pre-Installation Programming Procedure with PC ProGrammer – Remote Mount" and adjust as necessary for the specific application.

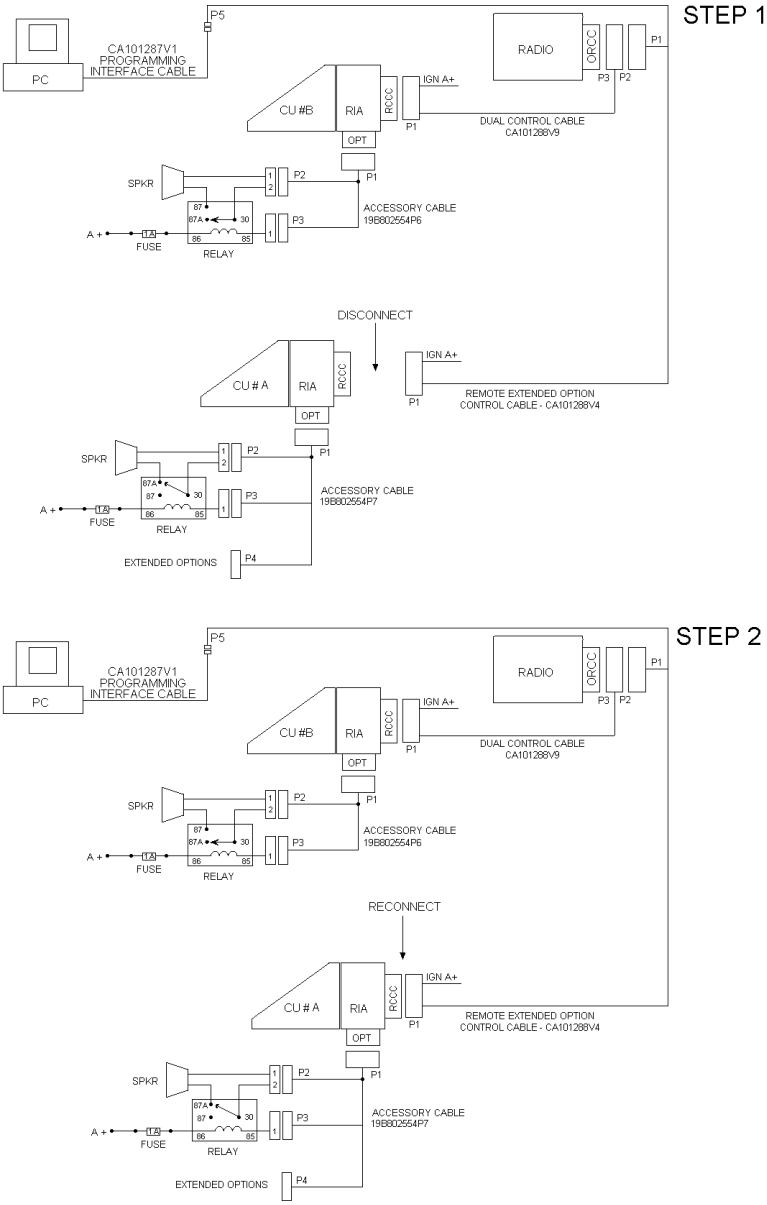

Figure 20 - J725M Field Programming – Dual Control Unit Remote Mount/Remote Mount Configuration

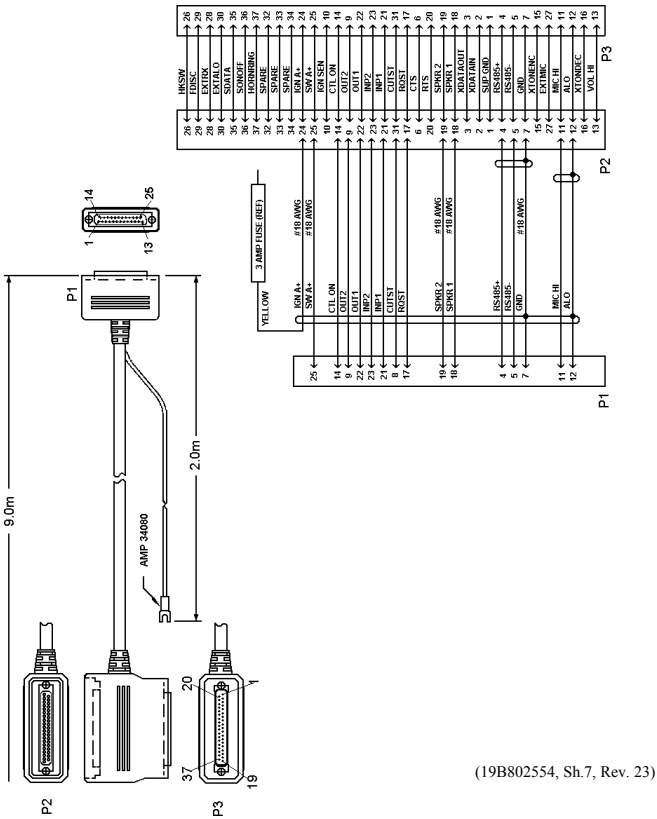

Figure 21 – Remote Mount Dual Control Cable 19B802554P9

DUAL RADIO UNITS

The Dual Radio feature can be configured either for two remote mount radio units or one front mount unit and one remote mount unit. In remote mount configurations the Control Unit is typically located in the vehicle cab, with the Radio Units located side-by-side in vehicle trunk. In front/remote mount configurations the front mount unit is located in the vehicle cab, with the remote mount unit located in a convenient location nearby. The remote/remote mount configuration is the preferred installation, since a separate control unit is required to program the remote unit in a front/remote mount configuration.

The following Dual Radio Unit configurations are not allowed:

1. Any configuration using a DIN cassette mount.
2. Any installation where Extended Options are required from both Radio Units. Extended Options are supported in one Radio Unit only.

PRE-INSTALLATION PROGRAMMING PROCEDURE WITH PC PROGRAMMER – DUAL RADIO UNITS

All Radio Units in the Dual Radio configuration MUST BE PROGRAMMED prior to final installation. It is recommended that the units be first programmed at an Authorized Service Center, then transferred to the user's installation.

NOTE

Both the J725M Master and J725M Slave mobiles must be programmed with the same Group version of Flash code. The Group version must be G30 or later. Failure to do so may result in inadvertent lockup states in the dual radio configuration.

These configurations provide for a Master Radio Unit and a Slave Radio Unit. In the remote/remote mount configuration, the Master Radio Unit is always the radio most directly connected to the Control Unit. In the front/remote mount configuration, the Master Radio Unit is always the front mount radio. Extended Options are allowed only in the Master Radio Unit. Programming each radio is straightforward, except that one radio is programmed as a Master, and one as a Slave.

1. Decide which Radio Unit shall be the Master Unit. Configure the radio for programming as shown in the applicable service section manual.
2. Program the radio with the following control configurations:

Network Options	
Dual Control	Disable
Speaker	Disable
Multiple Radio	Enable
Radio Type	Slave or Master
Power Up Volume	5
Mute Time-Out	30.0
Termination	Enable
Display	Selected for Master radio only
Power Up	Enable for Master radio only
Power Up Radio	Master for Master radio only
Receive Emergency	Enable for Master radio only
Receive Only	Enable for Master radio only
MuRPS	Disable for Master radio only
Program Radio Setup	
Mobile Options	Push Button
J725M Options	
Write System Keypad File	Enable (System control unit)
Write Scan Keypad File	Enable (Scan control unit)

INSTALLATION INSTRUCTIONS FOR FRONT/ REMOTE MOUNT DUAL RADIO CONFIGURATION

1. Plan the mounting locations of the two Radio Units. Note that the maximum cable length allowed between the two radios is two meters. Referring to Figure 36, run Dual Radio Cable (CA101288V10) between locations for Master and Slave Radio Units. Be sure to locate the P2/P3 connector assembly at the Master Radio Unit.

2. After installing Master Radio Unit mounting hardware, connect the Dual Radio Cable Connector (P3) to the Master Radio Unit. Tighten the two jackscrews on P3. Next connect the Accessory Cable (CA101288V2) Connector (P1) to the Dual Radio Cable Connector (P2), and tighten to jackscrews on P2.

3. Connect Microphone and Accessories. Refer to Accessory Installation Manual for proper connection of Accessories.

4. Connect Power Cable and Antenna, then install Master Radio Unit in mounting bracket.

5. Connect "IGN A+" lead, if option is desired. Be sure internal switch SW601 is set properly. Refer to NOTE on Page 20 of this manual for details.

6. After installing Slave Radio Unit in its mounting hardware, connect Dual Radio Cable (P1), and tighten jackscrews. Be sure SW601 setting on Slave Radio Unit is same as for Master Radio Unit. Connect Power Cable and Antenna to Slave Radio.

7. Check Dual Radio operation, using Operator's Manual as test guide.

INSTALLATION INSTRUCTIONS FOR REMOTE/ REMOTE MOUNT DUAL RADIO CONFIGURATION

1. Plan the mounting locations of the two Radio Units. Note that the maximum cable length allowed between the two radios is two meters. Referring to Figure 37, run Dual Radio Cable (CA101288V10) between locations for Master and Slave Radio Units. Be sure to locate the P2/P3 connector assembly at the Master Radio Unit.

2. After installing Master Radio Unit mounting hardware, connect the Dual Radio Cable Connector (P3) to the Master Radio Unit. Tighten the two jackscrews on P3.

3. Next route the Remote Mount Extended Option Control Cable (CA101288V4) between Control Head and Master Radio locations. After installing Control Head, connect Remote Control Cable Connector (P2) to Control Head.

4. Connect "IGN A+" lead, if option is desired. Be sure internal Switch SW601 on Master Radio is set properly. Refer to Page 20 of this manual for details.

5. Connect Accessory Cable (19B802554P7) Connector (P1) to Control Head.

6. Connect Microphone and Accessories. Refer to Accessory Installation Manual for proper connection of Accessories.

7. Now connect Remote Control Cable Connector (P1) to the Dual Radio Cable Connector (P2), and tighten to jackscrews on P2.

8. Connect Power Cable, and Antenna, then install Master Radio Unit in mounting bracket.

9. After installing Slave Radio Unit in its mounting hardware, connect Dual Radio Cable (P1), and tighten jackscrews. Be sure SW601 setting on Slave Radio Unit is same as for Master Radio Unit. Connect Power Cable and Antenna to Slave Radio.

10. Check Dual Radio operation, using operator's manual as test guide.

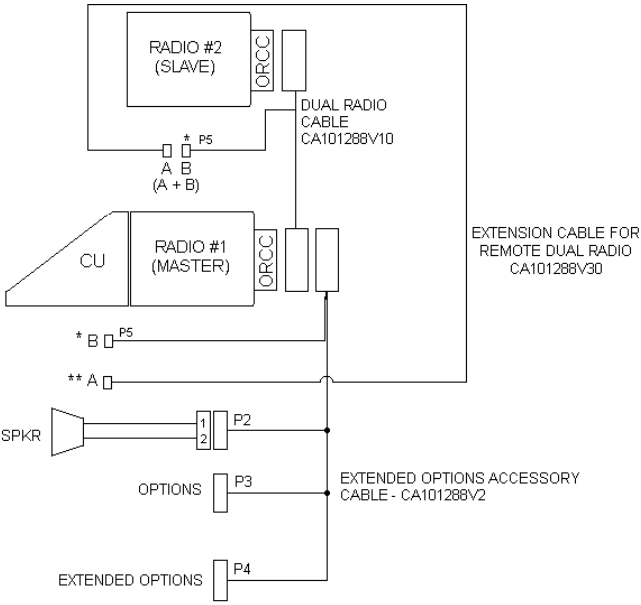

* Provides access for Programming/Keyloading/Mobile Data

***(A+B)* Option Extension Cable for Remote Dual Radio (CA101288V30) provides access for programming and keyloading to the second radio of a dual configuration.

Figure 22 - J725M Dual Radio Front Mount Installation Configuration

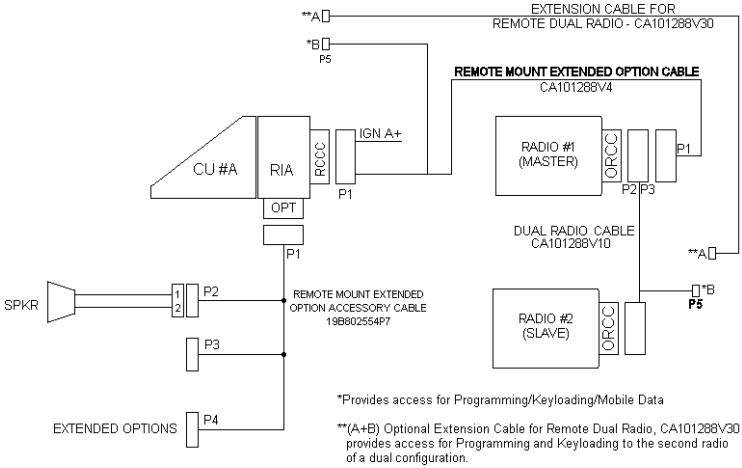

Figure 23 - J725M Dual Radio Remote Mount Installation Configuration

Enter Field Programming with PC Programmer – Dual Radio Unit sections.

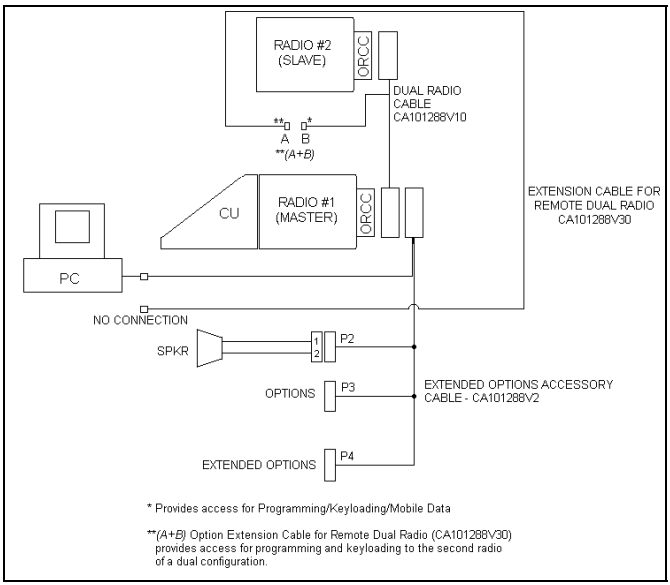

Figure 24 – Dual Radio Configuration – Front/Remote Mount (Step 1 – Program the Master Unit)

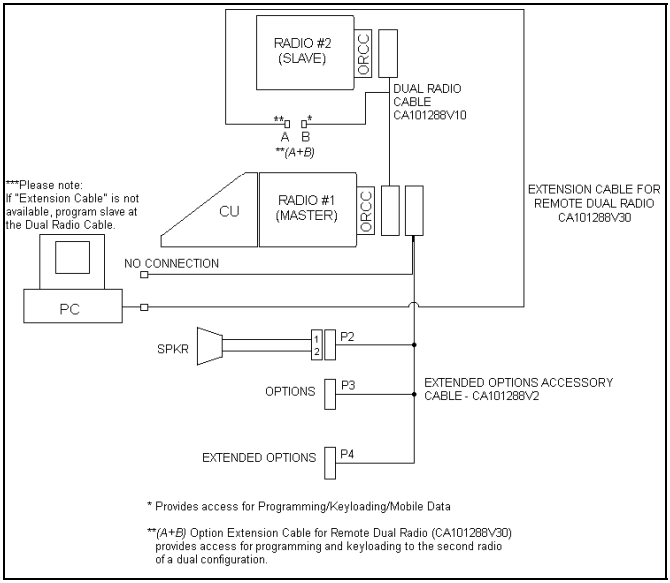

Figure 25 – Dual Radio Configuration – Front/Remote Mount (Step 2 – Program the Slave Unit)

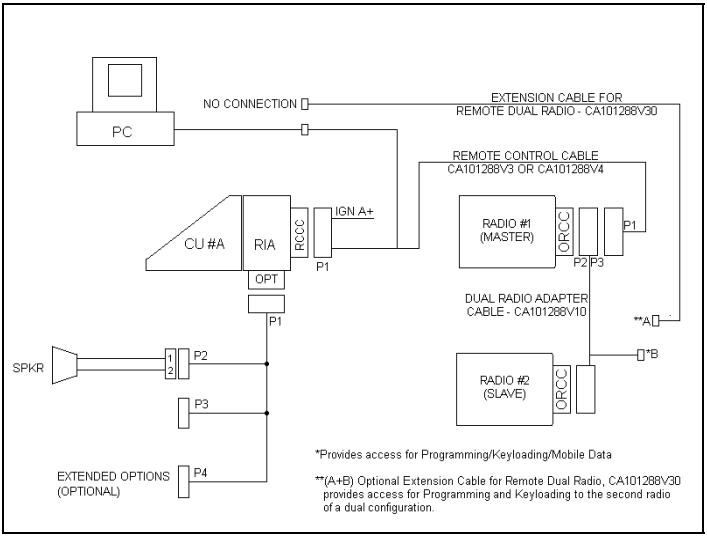

Figure 26 – Dual Radio Configuration – Remote/Remote Mount (Step 1 – Program the Master Unit)

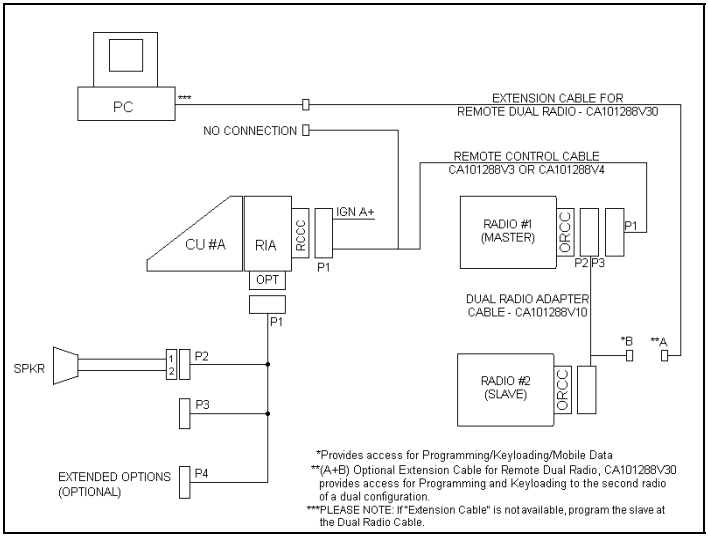

Figure 27 – Dual Radio Configuration – Remote/Remote Mount (Step 2 – Program the Slave Unit)

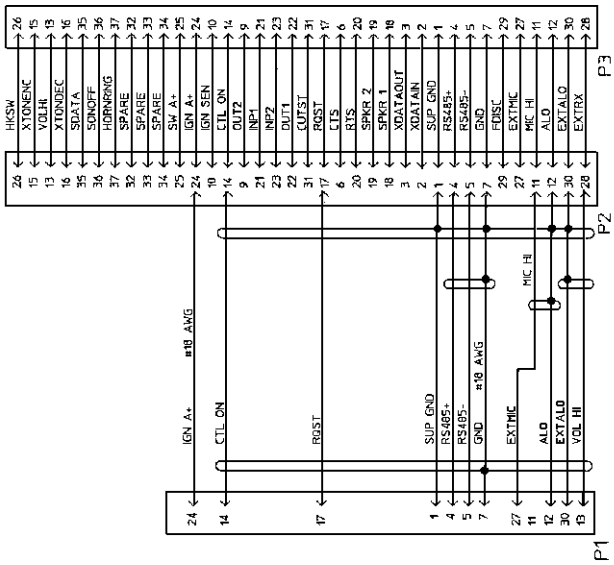

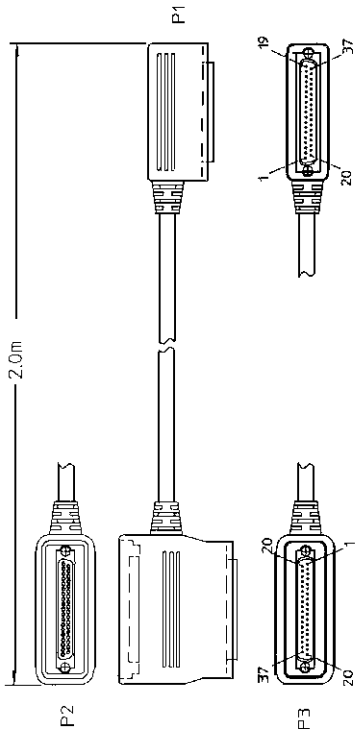

(19B802554, Sh.8, Rev. 23)

Figure 28 – Dual Radio Control Cable (CA101288V10)

ANTENNA

Installation instructions for the antenna are packaged with the antenna. The antenna must be installed in accordance with good engineering practice for optimum results.

Typical Mobile Antenna Installation

A permanent mount-type antenna should be located in the center of the roof or center of rear deck. **Important Note: Rear deck mounting of an antenna is only applicable when the installation provides at least 20 centimeters (8 inches) between the antenna and occupants of the vehicle. This distance recommendation is made using a 50% duty cycle.**

See "Safety Training Information" section at the beginning of this manual for further information regarding Specific Absorption Rate (SAR) limits of RF radiation absorption set by the FCC.

Try to route the cable away from locations where it will be exposed to heat, sharp edges or mechanical damage, and where it will be out of the way of the driver, passengers or vehicles mechanics. Wherever possible, existing holes in the trunk wall, and the channels above or beneath doors and window columns should be utilized.

Avoid routing the antenna cable near any electronic modules or along side any vehicle wiring.

Connect the antenna cable to the TNC on the radio, being careful not to twist the cable.

Typical Desktop Base Station Antenna Installation

For desktop base station configurations, a typical building roof top/tower installation may be used.

Warranty

M/A-COM
3315 Old Forest Road
Lynchburg, Virginia 24501
1-800-528-7711
(Outside USA, 804-385-2400)

Printed in U.S.A.