Installation Manual

MM101013V1 R1A

JAGUAR™ 725M MOBILE RADIO & CONTROL UNIT

MOTORCYCLE INSTALLATION

MA-COM

NOTICE

Repairs to this equipment should be made only by an authorized service technician or at a facility designated by the supplier. Any repairs, alterations or substitutions of recommended parts made by the user to this equipment not approved by the manufacturer could void the user's authority to operate the equipment in addition to the manufacturers warranty.

NOTICE

The software contained in this device is copyrighted by M/A-COM Private Radio Systems, Inc. Unpublished rights are reserved under the copyright laws of the United States.

This manual is published by **M/A-COM Private Radio Systems, Inc.**, without any warranty. Improvements and changes to this manual necessitated by typographical errors, inaccuracies of current information, or improvements to programs and/or equipment, may be made by **M/A-COM Private Radio Systems, Inc.**, at any time and without notice. Such changes will be incorporated into new editions of this manual. No part of this manual may be reproduced or transmitted in any form or by any means,. electronic or mechanical, including photocopying and recording, for any purpose, without the express written permission of **M/A-COM Private Radio Systems, Inc.**

Copyright© 2001 M/A-COM Private Radio Systems, Inc. All rights reserved.

Table of Contents

SAFETY TRAINING INFORMATION....4
TRANSMITTER HAZARDS....5
SAFE DRIVING RECOMMENDATIONS....6

GENERAL INFORMATION....8
RELATED DOCUMENTATION....8

OPTIONS AND ACCESSORIES....9
VENDOR DROP SHIP OPTIONS....9
External Headset Options....9
HARDWARE KITS....10
USER SUPPLIED EQUIPMENT....14
POWER CONSIDERATIONS....14
RF Power Adjustments....14

INSTALLATION....17
TOOLS REQUIRED....17
EQUIPMENT INSTALLATION....17
Assembling & Installing the Weather Resistant Case Assembly....17
Harley-Davidson Installation....19
RADIO MOUNTING BRACKETS....19

CONTROL UNIT MOUNTING....22
Control Unit And Mic Hanger Installation....22
SPEAKER MOUNTING....23
CABLE ROUTING....26
Power and Control Cables....26
Option Cable....26
Typical Harley-Davidson Installation....27
CABLE CONNECTIONS....31
Power Cable....31
Control Cable....31
Ignition Switch Option....32
Accessory Cable....32
ANTENNA INSTALLATION....32
General....32
Typical Motorcycle Mount Antenna Installation....34

FINAL CHECKS AND CONNECTIONS....35
HEADSET INSTALLATION (OPTION)....35
Headset Operation....36

SAFETY TRAINING INFORMATION

Your M/A-COM JAGUAR™ 725M Mobile Radio generates RF electromagnetic energy during transmit mode. This radio is designed for and classified as "Occupational Use Only," meaning it must be used only during the course of employment by individuals aware of the hazards and the ways to minimize such hazards. This radio is not intended for use by the "General Population" in an uncontrolled environment.

This radio has been tested and complies with the FCC RF exposure limits for "Occupational Use Only." In addition, your M/A-COM radio complies with the following Standards and Guidelines with regard to RF energy and electromagnetic energy levels and evaluation of such levels for exposure to humans:

- FCC OET Bulletin 65 Edition 97-01 Supplement C, Evaluating Compliance with FCC Guidelines for Human Exposure to Radio Frequency Electromagnetic Fields.
- American National Standards Institute (C95.1-1992), IEEE Standard for Safety Levels with Respect to Human Exposure to Radio Frequency Electromagnetic Fields, 3 kHz to 300 GHz.
- American National Standards Institute (C95.3-1992), IEEE Recommended Practice for the Measurement of Potentially Hazardous Electromagnetic Fields – RF and Microwave.

To ensure that your exposure to RF electromagnetic energy is within the FCC allowable limits for occupational use, always adhere to the following guidelines:

- DO NOT operate the radio without a proper antenna attached, as this may damage the radio and may also cause you to exceed FCC RF exposure limits. A proper antenna is the antenna supplied with this radio by M/A-COM or an antenna specifically authorized by M/A-COM for use with this radio.

- DO NOT transmit for more than 50% of total radio use time (50% duty cycle). Transmitting more than 50% of the time can cause FCC RF exposure compliance requirements to be exceeded. The radio is transmitting when the “TX” LED in the radio display is lit. You can cause the radio to transmit by pressing the PTT button on the microphone.
- ALWAYS use M/A-COM authorized accessories (antennas, speaker/mics, etc.). Use of unauthorized accessories may cause the FCC Occupational/Controlled Exposure RF compliance to be exceeded.
- ALWAYS keep at least 20 cm (8 inches) between the antenna and operator/bystanders while transmitting. This radio has been tested and found compliant with Specific Absorption Rate (SAR) limits for uncontrolled exposure at a distance of 20 cm (8 inches) or more using a 50% duty cycle.

The information listed above is provided to make the user aware of an RF exposure and what to do to assure that this radio operates within the FCC RF exposure limits of this radio.

TRANSMITTER HAZARDS

The operator of any mobile radio should be aware of certain hazards common to the operation of vehicular radio transmitters. **A list of several possible hazards is given:**

- **Explosive Atmospheres –** Just as it is dangerous to fuel a vehicle with the motor running, similar hazards exist when operating a mobile radio. Be sure to turn the radio off while fueling a vehicle. Do not carry containers of fuel in the trunk of a vehicle if the radio is mounted in the trunk.

  Areas with potentially explosive atmosphere are often, but not always, clearly marked. Turn OFF your radio when in any area with a potentially explosive atmosphere. It is rare, but not impossible that the radio or its accessories could generate sparks.

- **Interference to Vehicular Electronics Systems –** Electronic fuel injection systems, electronic anti-skid braking systems, electronic cruise control systems, etc., are typical electronic systems that may malfunction due to the lack of protection from radio frequency energy

present when transmitting. If the vehicle contains such equipment, consult the dealer and enlist their aid in determining the expected performance of electronic circuits when the radio is transmitting.

- **Dynamite Blasting Caps –** Dynamite blasting caps may explode by operating a radio within 500 feet of the blasting caps. Always obey the "**Turn Off Two-Way Radios**" signs posted where dynamite is being used.
- When transporting blasting caps in your vehicle:
  - Carry the blasting caps in a closed metal box with a soft lining.
  - Leave the radio **OFF** whenever the blasting caps are being put into or removed from the vehicle.
- **Liquefied Petroleum (LP) Gas Powered Vehicles –** Mobile radio installations in vehicles powered by liquefied petroleum gas with the LP gas container in the trunk or other sealed-off space within the interior of the vehicle must conform to the **N**ational **F**ire **P**rotection **A**ssociation standard **NFPA 58** requiring:
  - The space containing the radio equipment shall be isolated by a seal from the space containing the LP gas container and its fittings.
  - Outside filling connections shall be used for the LP gas container.
  - The LP gas container shall be vented to the outside of the vehicle.

SAFE DRIVING RECOMMENDATIONS

(Recommended by AAA)

- Read the literature on the safe operation of the radio.
- Keep both hands on the steering wheel and the microphone in its hanger whenever the vehicle is in motion.
- Place calls only when the vehicle is stopped.
- When talking from a moving vehicle is unavoidable, drive in the slower lane. Keep conversations brief.
- If a conversation requires taking notes or complex thought, stop the vehicle in a safe place and continue the call.
- Whenever using a mobile radio, exercise caution.

Figure 1 – Typical JAGUAR 725M Motorcycle Installation

GENERAL INFORMATION

This manual contains instructions for installing the JAGUAR 725M mobile radio, JAGUAR 725M control unit, and associated hardware on a motorcycle. The instructions in this manual are typical installation instructions, and are not intended to cover all makes and models of motorcycles.

Final installation of the radio equipment is left to the discretion of the radio installer.

To simplify installation and minimize difficulties, it is suggested that the installer read the entire manual prior to installation. Figure 1 shows a typical motorcycle installation.

NOTE

M/A-COM Private Radio Systems, Inc. does not assume liability for possible degradation of the radio or motorcycle performance due to mounting procedures.

RELATED DOCUMENTATION

JAGUAR 725M Mobile Radio Operator's Manual,
Scan & System (800 MHz).....MM101258V1

OPTIONS AND ACCESSORIES

All available options and accessories applicable to factory installed motorcycle installations are defined below. **NOTE**: These options do not include a JAGUAR 725M radio or JAGUAR 725M control unit. The JAGUAR 725M mobile radio and control unit must be ordered separately, then factory modified to adapt it for motorcycle applications. Applicable hardware is included with each option.

HBxxxx	JAGUAR 725M Mobile Radio with Scan Control Unit
HBxxxx	JAGUAR 725M Mobile Radio with System Control Unit
HBxxxx	Field upgrade kit to adapt existing remote mount JAGUAR 725M radios for motorcycle applications

VENDOR DROP SHIP OPTIONS

The following is a listing of all available Vendor drop-ship options.

External Headset Options

SM-K71BP	Helmet Kit: Bell BT400 with speaker and noise canceling microphone
SM-74KBP	Helmet Kit: Bell BT400 with dual speakers and noise canceling microphone (see NOTE on page 36)
SM-K71QA	Helmet Kit: SHOE1 TJ101 with speaker and noise canceling microphone
SM-K74QA	Helmet Kit: SHOE1 TJ101 with dual speakers and noise canceling microphone (see NOTE on page 36)
SM-MCH-71GT-2	Helmet Kit Interface Cable (pushbutton switch with PTT function; interfaces with K71BP/K74BP/ K71QA/K74QA helmet kits; Harley-Davidson)
SM-MCH-72GT-2	Helmet Kit Interface Cable (rocker switch with PTT and CG decode disable functions; interfaces with K71BP/K74BP/ K71QA/K74QA helmet kits; Harley-Davidson); ***or***
SM-C70GM	Belt Box Cable Assembly Interface.

HARDWARE KITS

A typical Motorcycle Kit is shown in Figure 2. Hardware Kits 350A1396G1-G4 are shown in Figure 3 and Figure 4. Hardware kit 350A1396G1 is used to factory install the radio mounting bracket and alternator whine reject filter to the weather-resistant case. Hardware kits 350A1396G2-G4 are used by the customer in the field to mount the case and control head to the motorcycle and to optionally use the Harley-Davidson adapter bracket. The Motorcycle Kit includes the items listed below. The antenna and Helmet Kit are optional.

- MIL-STD weather resistant locking JAGUAR 725M radio case with integral antenna ground plane
- Radio case mounting plate kit
- MIL-STD weatherproof microphone
- Microphone hangar
- MIL-STD weatherproof speaker
- Power/Control Cable
- Fuse Kit
- Motorcycle accessory cable

Figure 2 - Typical Motorcycle Kit

Hardware Application Kit 350A1396G1

Case/Antenna Assembly Hardware Kit 350A1396G2

Figure 3 - Hardware Installation Kits For Harley-Davidson Motorcycles

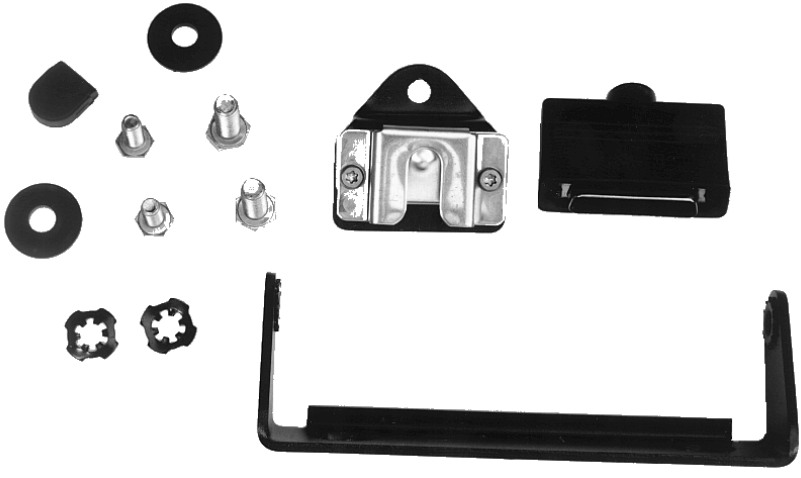

Control Unit/Microphone Hardware Kit 350A1396G3

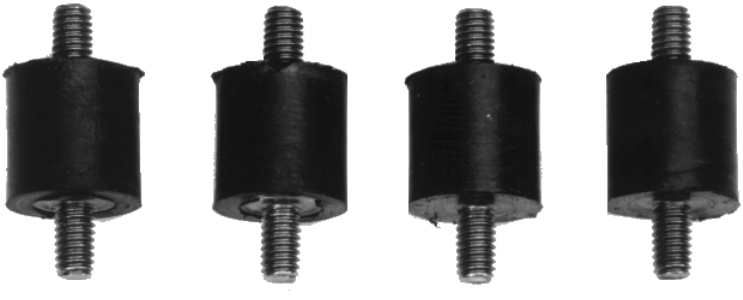

Motorcycle Adapter Mounting Kit 350A1396G4

Figure 4 - Typical Hardware Installation Kits For Harley-Davidson & Kawasaki Motorcycles

USER SUPPLIED EQUIPMENT

- Motorcycle Radio Mounting Bracket

POWER CONSIDERATIONS

The motorcycle may be equipped with additional lights, light flashers, sirens, PA systems, etc. Therefore, consideration must be given to the total system current drain. It is recommended that the radios be set to not exceed the applicable rated RF power output and current drain shown in Table 1 for all JAGUAR 725M motorcycle applications.

CAUTION

Do NOT use a JAGUAR 725M mobile radio with power exceeding the power limits shown in Table 1 for motorcycle applications. To do so will result in damage to the motorcycle alternator, battery, and all circuits. Also, the possibility of interference is increased if the proper RF power level is not used. As a final note, RF power may not be set to exceed the maximum regulatory RF power specified by that country's regulatory agency.

RF Power Adjustments

For factory installed options the maximum RF power levels are factory preset and should only require verification in the field. See Table 1.

For field installed options, the RF power of previously purchased JAGUAR 725M mobile radios in the field must be appropriately set via modification of the maximum RF power tracking data fields. The left column is set for rated power (example: 250 for 25.0 watts). The tracking data numbers are adjusted to produce RF power as specified in the actual "JAGUAR 725M Motorcycle Radio RF Power" column in Table 1.

NOTE

High power JAGUAR 725M mobile radios **CANNOT** be used in motorcycle applications. The RF power cannot be turned down sufficiently to meet regulatory specifications.

RF Power Tracking Data for Resetting in the Field

800 MHz Band:

- **6-12 watts**, low power JAGUAR 725M: no resetting of RF power tracking data is needed.
- **17.5-35 watts**, high power JAGUAR 725M (repeater input band 806-825 MHz): RF power tracking data is reset as follows:
    1. The RF Power tracking data shown in the “350” row under the “TX Power Levels” columns must be adjusted down to 27 ± 0.5 watts. This same tracking data should be copied into the “300” row under the “TX Power Levels” columns.
    2. This will set the upper limit of the 800 MHz mobile in the repeater input band to a rated RF power of 25 watts (with an actual RF power setting level of 27 ± 0.5 watts).

The 800 MHz RF power tracking data settings are listed in MM101260V1 under the sections for TRACKING DATA, TEST FREQUENCIES, & SETTING TRACKING DATA. Tracking data frequencies are listed in Table 2 in the TX RPT INPUT column.

- **15-30 watts**, high power JAGUAR 725M (repeater talkaround band 851-870 MHz): RF power tracking data is reset as follows:
    1. The RF Power tracking data shown in the “30” row under the “TA TX Power Levels” columns must be adjusted down to 27 ± 0.5 watts. This same tracking data should be copied into the “35” row under the “TA TX Power Levels” columns.
    2. Change the “30” & “35” row labels to “25”.
    3. This will set the upper limit of the 800 MHz mobile in the repeater talkaround band to a rated RF power of 25 watts (with an actual RF power setting level of 27 ± 0.5 watts).

The 800 MHz RF power tracking data settings are listed in MM101260V1 under the sections for TRACKING DATA, TEST FREQUENCIES, & SETTING TRACKING DATA. Tracking data frequencies are listed in Table 2 in the TX TALK AROUND column.

Table 1 - RF Power Versus Current Setting

STANDARD JAGUAR 725M MOBILE RADIO RF POWER		JAGUAR 725M MOBILE RADIO RF POWER (MOTORCYCLE INSTALLATION)		
RF PWR (Rated)	**CURRENT (Typical)**	**RF PWR (Rated)**	**RF POWER SETTING (Actual)**	**CURRENT (Typical)**
806-825 MHz		**806-825 MHz**		
35 W	15 A	35 W	27 ± 0.5 W	15 A
12 W	7 A	15 W	13.0 ± 0.5 W	8 A
851-870 MHz		**851-870 MHz**		
30 W	15 A	25 W	27 ± 0.5 W	9 A
12 W	7 A	12 W	13.0 ± 0.5 W	7 A

INSTALLATION

Installation of the JAGUAR 725M mobile radio and control unit consists of:

- Assembling and installing the weather resistant motorcycle case assembly, including the adapter bracket, case/antenna mounting bracket, and bottom case (previously assembled) to the motorcycle mounting bracket (user supplied).
- Installing the radio in the radio mounting bracket located inside the weather-resistant case.
- Installing the control unit, microphone, and speaker.
- Installing the antenna.
- Routing the power, control, and option cables.
- Connecting all cables, including power, control, and option cables.
- Installing the Headset Option.
- Performing an operational check

All mounting hardware consists of stainless steel screws, locknuts, nuts, and lockwashers to resist corrosion.

TOOLS REQUIRED

- Socket wrench set U.S./metric with 3" extender
- Open end wrench, adjustable
- Wire clippers
- TORX® BIT set, small metric

EQUIPMENT INSTALLATION

Assembling & Installing the Weather Resistant Case Assembly

The motorcycle Weather Resistant Case Assembly may be installed on almost any motorcycle. Installation instructions provided here include information for the Harley-Davidson Dyna and Road King models. Figure 5 illustrates installation on Harley-Davidson motorcycles. Refer to thIS diagram during installation. Installation on other motorcycles is at the discretion of the installer.

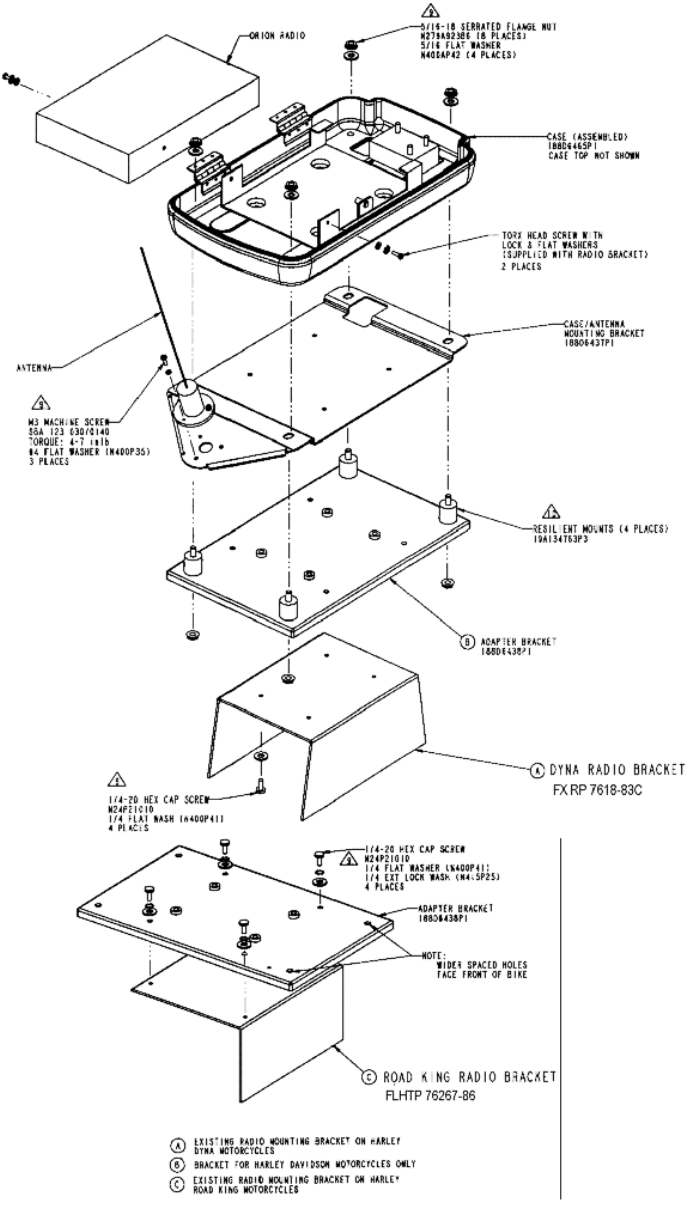

Figure 5 - Radio Installation, Harley-Davidson Motorcycles
(188D6803, Sh. 1, Rev. 2A)

Harley-Davidson Installation

1. Unpack the weather resistant motorcycle case, remove the key taped to the top cover and open the case.
2. Refer to Figure 5 and verify all components shown in the diagram are available.
3. Mount the adapter bracket on to the Dyna or Road King radio mounting bracket (user supplied) using the 1/4-20 x 5/8 screws provided.

NOTE

The radio mounting bracket for the Dyna and Road King models are different and require the use of different mounting holes. See Figure 5 – Radio Installation, Harley-Davidson Motorcycles.

4. Insert the power, control, and antenna cables through the square hole in the case/antenna mounting bracket and then through the bottom case assembly.
5. Mount the case mounting bracket and bottom case assembly onto the 4 resilient mounts using the serrated flange nuts and flat washers included inside the weather resistant case. Refer to Figure 7, Mounting Bracket and Case Assembly.
6. Refer to Figure 7 and connect the power cable to the radio. (Refer to Cable Connections.)
7. Position the radio, fins up, inside the bracket in the bottom case assembly and slide onto the arms. Lock in place using the TORX head screws and lock washers (taped to the radio bracket).
8. Refer to Figure 7 – Radio Connections and connect the antenna and control cables to the radio. (Refer to Antenna Installation.)
9. Mount the antenna to the case/antenna mounting bracket using the M3 x 16 mm pan head screws provided. Refer to Figure 6.

RADIO MOUNTING BRACKETS

Radio mounting brackets for all models of bikes are not available from the factory. Should a special application arise for a custom-made radio mounting bracket, it must be made using 0.125" steel (minimum). When designing and mounting the bracket, corners/edges should be rounded to the maximum extent possible.

Figure 6 – Case Mounting Bracket and Case Assembly

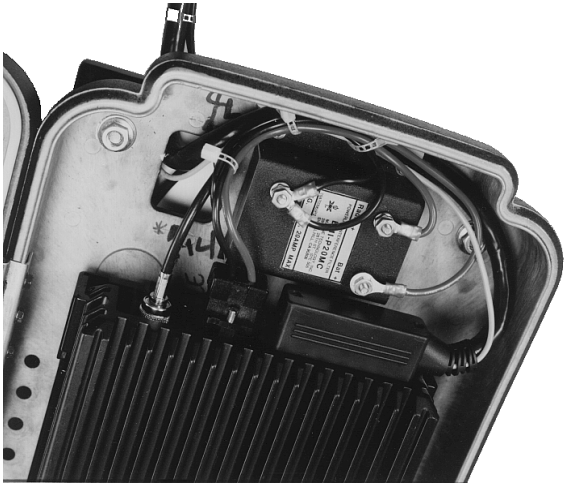

Figure 7 – Radio Connections

CONTROL UNIT MOUNTING

Mount the control unit within convenient reach of the operator, and where it will not interfere with the safe operation of the motorcycle. Figure 8 shows a typical installation of the control unit and microphone. Note also, the location of the option switch for the Headset Option.

Due to the large number of different makes and models of motorcycles, it is up to the installer to decide how to mount the control unit and optional equipment. Mounting brackets for all makes and models are not available from the factory, making it necessary to obtain a custom made bracket.

When designing and mounting the control unit bracket, the following guidelines should be considered.

- The installation must NOT interfere with steering or operation of the motorcycle.
- Mounting locations must NOT interfere with the driver or with instrument visibility.
- The installation should provide easy access to the radio operating controls.
- Rounded corners/edges should be employed to the maximum extent possible.

CAUTION

Be careful to avoid damaging some vital part of the motorcycle if it becomes necessary to drill mounting holes. Also, always check to see how far the mounting screws will extend below the mounting surface before installing. Caution must be exercised to not drill through the gasoline tank.

Control Unit And Mic Hanger Installation

Refer to Figure 9 for a detailed mechanical drawing of the control unit and microphone mounting assembly. The mounting bracket shown mates with the Harley-Davidson Road King hardware. For all other models, an additional adapter bracket is required.

1. Using the hardware supplied, (part of Hardware Kit 350A1396G3) mount the control unit bracket to the motorcycle.

NOTE

A special spacer may be required between the control unit bracket and the motorcycle to raise the level of the control unit bracket. This spacer, if needed, must be constructed locally.

2. Mount the control unit and mic hanger to the mounting bracket.

After installing the control unit, do not make any cable connections until all cables have been run and secured. Speaker and option connectors are shown on the Interconnection Diagrams listed in the Table of Contents.

SPEAKER MOUNTING

Mount the speaker where the operator can hear it, and where it does not interfere with the safe operation of the motorcycle. On some motorcycles, the speaker can be attached to the windshield bracket using existing bolts to secure the speaker mounting bracket (see Figure 10).

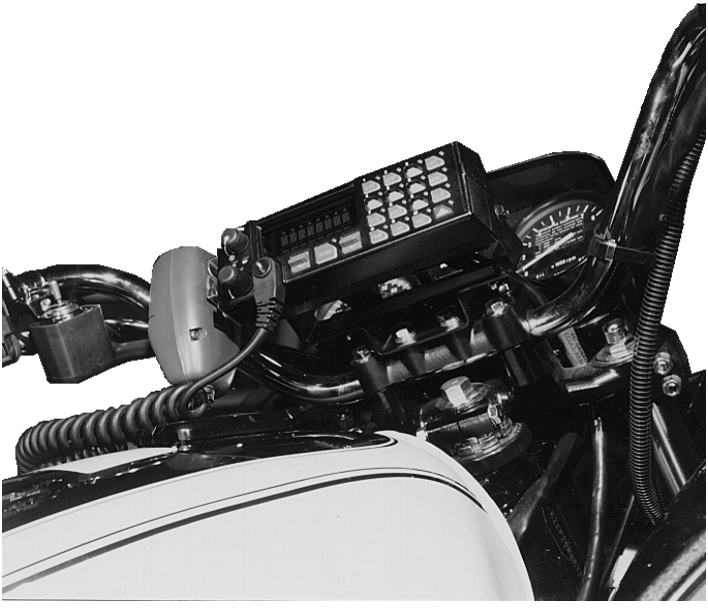

Figure 8 - Typical Control Unit Installation

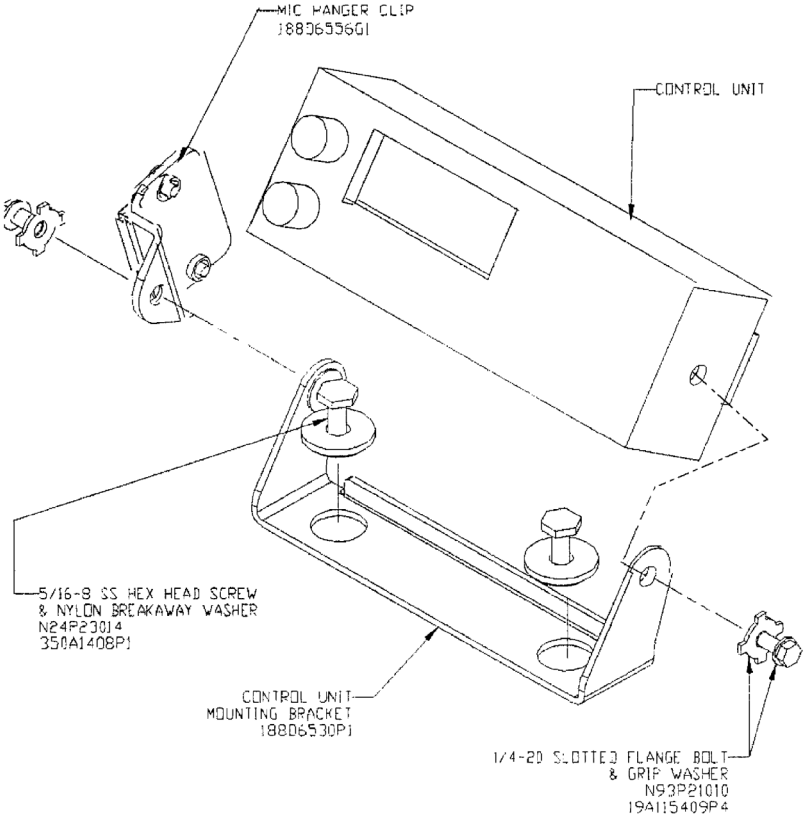

Figure 9 – Control Unit Mounting Assembly
(188D6804, Sh. 1, Rev. 2)

Figure 10 - Typical Speaker Mounting

CABLE ROUTING

Power and Control Cables

Cable routing consists of planning and routing the cable runs between the radio, control unit, and battery. The cables should be routed away from exhaust pipes, mufflers, and moving parts, or where mechanical damage may result. Secure all cables with black cable ties to provide a clean installation.

The power and control cables, red and black, exit the radio case assembly through the square hole in the front of the box and are routed to the area beneath the saddle. The fused power cables (19B802622P2 or 19B802554P25) from the radio terminate here and are connected to the battery. The control cable is routed through the triangular frame assembly to the rear of the control unit.

Option Cable

The option cable is routed from the option connector on the rear of the control unit CG/PTT disable switch mounted on the left handlebar.

Typical Harley-Davidson Installation

1. Disconnect gas line from tank and drain gas into an approved container.
2. Remove cowling, gas tank, and fairing, if required, to gain access to the triangular frame assembly, beneath the gas tank, to permit cable routing.
3. Push saddle support springs forward to release the saddle and tilt it forward to gain access to the area beneath the saddle.

NOTE

The power cable is designed for negative ground systems only. The power and control cable consists of three separate cables: RED (positive), BLACK (negative), and a control cable.

4. Pass the power and control cables through the square hole in the bottom of the radio case assembly to the area beneath the saddle. See Figure 7 which shows cable routing under the center of the case assembly. Figure 11 shows the cabling underneath the saddle area. (Note the location of the option cable and connector, not being used.)
5. Refer to Figure 12 and route the cables through the center of the triangular frame assembly to the area at the rear of the control unit. The cable may be routed along side existing cables and secured to them with cable ties.

NOTE

It may be necessary to notch a portion of the cowling at the control unit end and at the saddle area to provide entrance and exit holes for the cable. The entrance and exit cutaway holes are required to permit the cowling to be remounted flush to the gas tank.

6. Route the control cable to the rear of the control unit and make the connection to the right rear of the control unit as shown in Figure 13. Any excess cable will reside beneath the saddle area. (The option and accessory cable is shown connected to the left rear of the control unit).

7. Re-examine cable routing and be sure that all cables are neatly routed and secured with cable ties.
8. Install a cable clamp on saddle mounting bracket (left side) and secure the power and control cables from the radio case assembly.
9. Route speaker leads from the control cable underneath the handlebar to the rear of the instrument panel assembly in the vicinity of the speaker. Secure to headlight cabling with cable ties. Excess cable should be bundled and secured with cable ties behind the instrument panel assembly.

NOTE

Refer to HEADSET INSTALLATION (OPTION) for accessory cable routing instructions.

10. Connect speaker leads from accessory cable to speaker cable.
11. Connect negative power lead to the battery negative (-) terminal.
12. Connect positive power lead to the battery positive (+) terminal.
13. Reinstall gas tank, cowling, and secure saddle.
14. Verify all electrical connections: radio, control unit, antenna, option switch, speaker, and battery.
15. Close and lock radio case assembly.

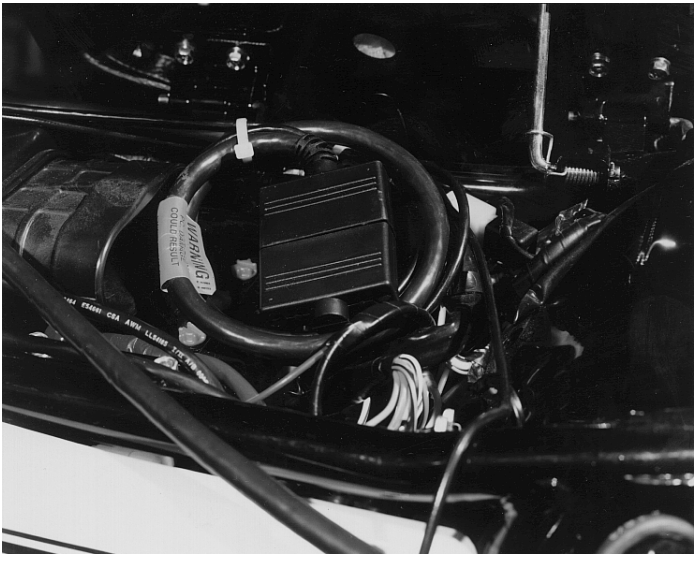

Figure 11 - Option Cable Stored Beneath Saddle Area

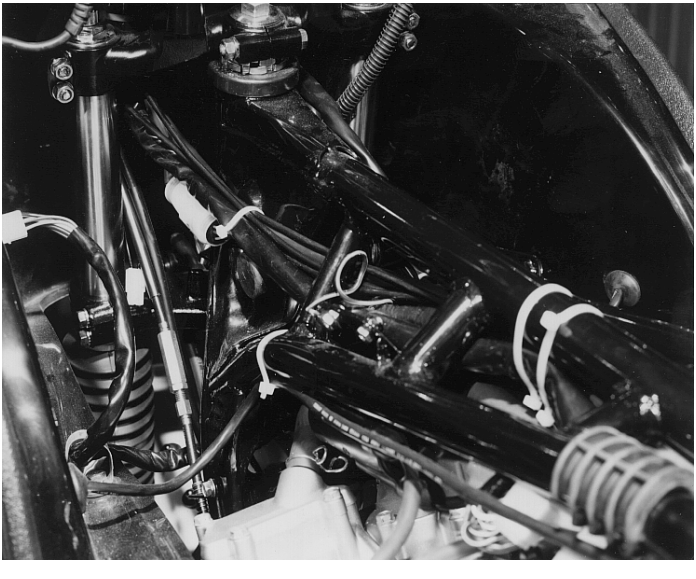

Figure 12 - Triangular Frame Assembly

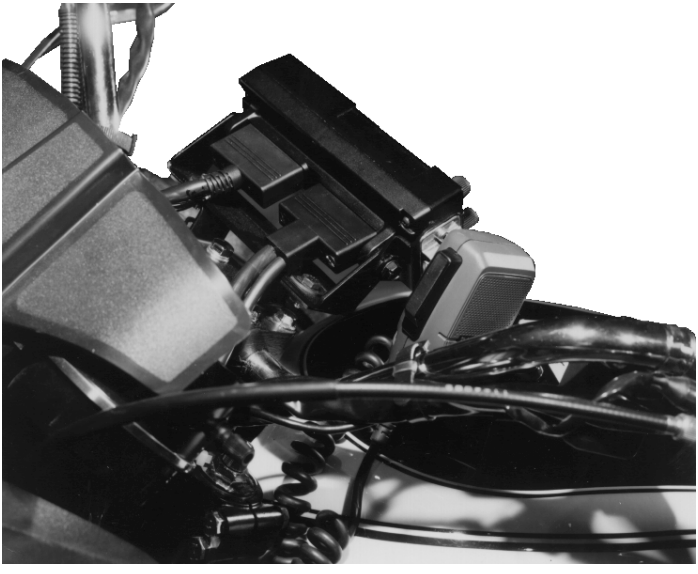

Figure 13 - Control Unit Connections

For Motorcycle Models Equipped with Gas Tank Fairing

The cable may be routed from the saddle area, under the fairing, around the left side of the gas tank filler pipe, and up to the area of the control unit. The fairing may have to be notched to provide entrance and exit space. Run the control cable as directed in Steps 1 through 3.

1. Remove all the screws securing the fairing. Next, unscrew and remove the gas tank cap and lift off the fairing. Replace the gas cap immediately.

Always replace the gas cap as soon as the fairing is replaced/removed. This is necessary to reduce the possibility of an explosion as well as to prevent drill shavings or other debris from getting into the gas tank.

2. Run the cables from the saddle area up the left side of the gas tank to the area of the control unit.

NOTE

It may be necessary to notch a portion of the fairing at the control unit end and at the saddle area to provide entrance and exit holes for the cable. The entrance and exit cutaway holes are required to permit the fairing to be remounted flush to the gas tank.

3. Before replacing the fairing, the control cable and any option cables may be run under the fairing also. Replace the fairing by removing the gas cap, repositioning the fairing, then replacing the gas cap and the screws that secure the fairing.

For Motorcycles Not Equipped with a Gas Tank Fairing

After making power connections, run the control cables up the left side of the motorcycle to the control unit and secure the cables with the cable ties. **Note:** All cables connect to the back of the control unit.

CABLE CONNECTIONS

Cable connections consist of connecting the power and control cables (individual red + and black -), the radio control cable, and the antenna cable. Verify that all cables have been connected and are secure.

Refer to control cable assembly drawings 19B802554 and Interconnection Drawings 188D6783 for all electrical and mechanical application details.

Power Cable

As shipped from the factory, the power cable (19B802622P2) is equipped with a 12 amp in-line fuse (installed) and ring terminals. The power cable supplies power from the battery to the radio. Refer to Figure 7.

1. Connect the red lead (+) to the battery terminal on the alternator whine filter and the black lead (-) to ground on the alternator whine filter.
2. Route the cables to the battery and then connect the black (-) and the red lead (+) to the battery terminals.

Control Cable

The control cable (remote mount, extended option) is routed between the control unit and the motorcycle radio case. In addition to the main cable, the cable assembly contains a pair of black speaker leads and a single yellow wire for ignition switch standby control. Normally, the ignition switch

standby control feature is not used in motorcycle applications and the yellow fuse assembly provided is discarded and the wire terminated. However, at the customer's discretion, the ignition switch standby control feature may be used.

The plug connections include the microphone, speaker, option cable, and the control cable. Refer to the interconnection diagram 188D6783 and to diagram 19B802554P23 for cable identification.

1. Plug the black speaker leads from the control cable into the speaker cable.
2. Plug the control cable into the right rear receptacle of the control unit.

Ignition Switch Option

NOTE

The JAGUAR 725M radio, as shipped from the factory, has the "ignition sense" feature disabled. As such, the radio is powered ON or OFF as determined by the front panel ON-OFF/VOLUME control only (assuming A+ and A- are connected). If the "ignition sense" feature is to be enabled, open the top cover of the radio and remove the shield from the logic PWB. Slide switch SW601 from position 3-2 to 1-2. Replace shield and top cover. Be sure to apply the correct torque to the screws holding the top cover in place. Refer to the JAGUAR 725M Maintenance Manual for installation instructions.

Accessory Cable

The accessory cable (19B802554P24) provides connections for the external headset, VGE/DES keyloader, and other options (i.e., data terminal, external encoder/decoder, etc). Refer to "HEADSET INSTALLATION (OPTION)."

ANTENNA INSTALLATION

General

The M/A-COM JAGUAR 725M motorcycle options for the 800 MHz land mobile radio band are specifically designed for use with the Allen Telecom, Inc. antenna (part number 19B209568P5). With this antenna, a ground plane is no longer necessary. This antenna is an end-fed high-impedance antenna

that provides the proper VSWR and radiation pattern without the use of a ground plane. Typical antenna gain without a ground plane is 0 dB.

The case/antenna mounting plate (188D6437P1) was specifically designed to fit the hole mounting pattern for the 19B209568P5 mount.

CAUTION

Since the Allen Telecom, Inc. antenna (part number 19B209568P5) is a high impedance, voltage fed antenna, the length of the coaxial cable from the antenna to the JAGUAR 725M RF port is critical. It cannot be just any arbitrary length. To prevent possible extraneous radiation, RFI feedback from the antenna to the radio, high VSWR, and antenna ground currents, select an antenna coaxial cable length that is close to a multiple of an odd quarter-wavelength.

To properly use a thru-line wattmeter, one of the following two conditions must be met:

- If the wattmeter is installed right at the JAGUAR 725M RF port and the odd multiple of a quarter-wavelength of coax to the antenna is used, correct readings will result. Any other length of coax will result in improper readings.
- If a length of coax equal to a multiple of a half-wave length is installed between the JAGUAR 725M RF port and the thru-line wattmeter and an odd multiple of a quarter-wavelength of coax to the antenna is used, correct readings will also result. Any other length of coax will result in improper readings.

To calculate the proper cable length of the antenna coaxial cable, proceed as follows:

1. Determine the center frequency of the majority of programmed transmit channel frequencies.
2. Use the formula: $\frac{1}{4}\lambda \text{ in} = \frac{2805}{F(\text{MHz})}$

Example 1: Assume the customer has an 800 MHz JAGUAR 725M with most of the transmit frequencies between 816-821 MHz. Therefore, center frequency is 818.5 MHz. Applying the above formula results in:

$$\tfrac{1}{4}\lambda \text{ in} = \frac{2805}{818.5} = 3.43 \text{ inches}$$

$$\tfrac{1}{2}\lambda \text{ wavelength (in inches)} = 6.85 \text{ inches}$$

The cable length should be 3.43 + n x 6.85 inches. Since the installer will need a length of the coax from the antenna to the radio to be at least 22 inches long to physically connect the antenna to the radio, he must calculate a length of coax that will meet the odd quarter-wavelength requirement and be greater than 22 inches.

Choose n=3. Coaxial cable length is 3.43 + 3 x 6.85= 23.99 inches.

Example 2: Assume the center frequency is 155 MHz. Applying the formula: ¼λ = 18.10 inches; ½ wavelength = 36.19 inches; n=1.

Coaxial cable length is 18.10 + 1 x 36.19= 54.29 inches.

Typical Motorcycle Mount Antenna Installation

The typical motorcycle mounting of an antenna is only applicable when the installation provides at least 20 centimeters (8 inches) between the antenna and operators/bystanders. This distance recommendation is made using a 50% duty cycle.

1. After the proper length of coax cable has been calculated, cut the coax cable (provided by Allen Telecom, Inc.) so that when the TNC crimp style connector is installed the overall length will equal the calculated length.

2. Route the assembled proper length coax from the antenna, under the antenna bracket, and into the weather-resistant case.

3. Connect the antenna cable to the RF port on the JAGUAR 725M radio.

See “Safety Training Information” section at the beginning of this manual for further information regarding Specific Absorption Rate (SAR) limits of RF radiation absorption set by the FCC.

FINAL CHECKS AND CONNECTIONS

After the weather resistant case is installed, all cables run, and the radio, control unit, speaker, and microphone installed, refer to the interconnection diagrams and verify that all connections have been made and the equipment is properly grounded. Make a final check of all cables to make sure they are properly connected and dressed away from all moving parts and exhaust pipes, and secured with cable ties. Then recheck all electrical connections and radio mounting hardware.

HEADSET INSTALLATION (OPTION)

NOTE

To enable the PTT switch on the handlebar switch for external headset options, the JAGUAR 725M mobile radio must be programmed so that INP2 is defined to be “PTT” or “EXTPTT”. Without this software addition, the headset options will not transmit.

The Headset Option includes the helmet-mounted noise canceling microphone with single (or dual) speakers, the belt box assembly (with internal amplifier), and the Helmet Kit Interface Cable.

1. Install the noise-canceling microphone and single (or dual) speakers in the helmet per instructions provided by the vendor.
2. Remove the RIA plug 19B802554P26 from the option connector on the back of the JAGUAR 725M radio control unit. Connect the accessory cable 19B802554P24 to the option connector.
3. Install the Helmet Kit Interface Cable (SM-MCH-71GT-2, etc.) containing the PTT/CG disable switch to the left handlebar, insuring that freedom of motion is not compromised. Route the eight pin waterproof connector over to and mate it with the eight pin waterproof connector that is part of accessory cable 19B802554P24.
4. Route the long end of the Helmet Kit Interface Cable containing the four position quick disconnect plug along the bike and bring it out near the location of the driver’s hip.

5. The long end of the accessory cable 19B802554P24 which contains the 25 pin D-subminiature receptacle connector is to also be routed along the bike and any excess is to be coiled up and left under the seat.

6. The driver takes the belt box SM-C70GM and attaches it to his belt. The helmet kit quick disconnect plug is mated to the belt box quick disconnect connector.

7. Finally, the other quick disconnect connector of the belt box is mated to the Helmet Kit Interface Cable quick disconnect connector.

NOTE

The headset option speakers are a nominal 24 ohms. Use of other impedance vale speakers will result in non-optimum sound performance from the speaker(s). The SM-K74BP and SM-K74QA dual speaker helmet kits have the two speakers wired in parallel. They must be re-wired in series to perform properly.

NOTE

The Helmet Kit Interface Cables SM-MCH-71GT-2 and SM-MCK-71GT-2 have a pushbutton switch that only supports the PTT function. The Interface Cables SM-MCH-72GT-2 and SM-MCK-72GT-2 have a three-position rocker switch that supports both the PTT and CG Decode Disable functions.

Headset Operation

1. If the motorcycle is equipped with the SM-MCH-71GT-2 or SM-MCK-71GT-2 Motorcycle Interface cable, simply press and hold the PTT button (and talk into the noise-canceling mic) to transmit. Release the PTT button to receive. Adjust the volume switch on the control head for the desired level.

2. If the motorcycle is equipped with the SM-MCH-72GT-2 or SM-MCK-72GT-2 Motorcycle Interface cable, press and hold the three position toggle switch to the momentary (PTT) position (and talk into the noise-canceling mic) to transmit. Release the toggle switch to its center position to receive. In this center position, the user is in MONITOR mode because any programmed decoder has been deactivated. To be in receive mode with any programmed decoders activated, press the toggle switch to the latched position. Adjust the volume control on the control head for the desired level.

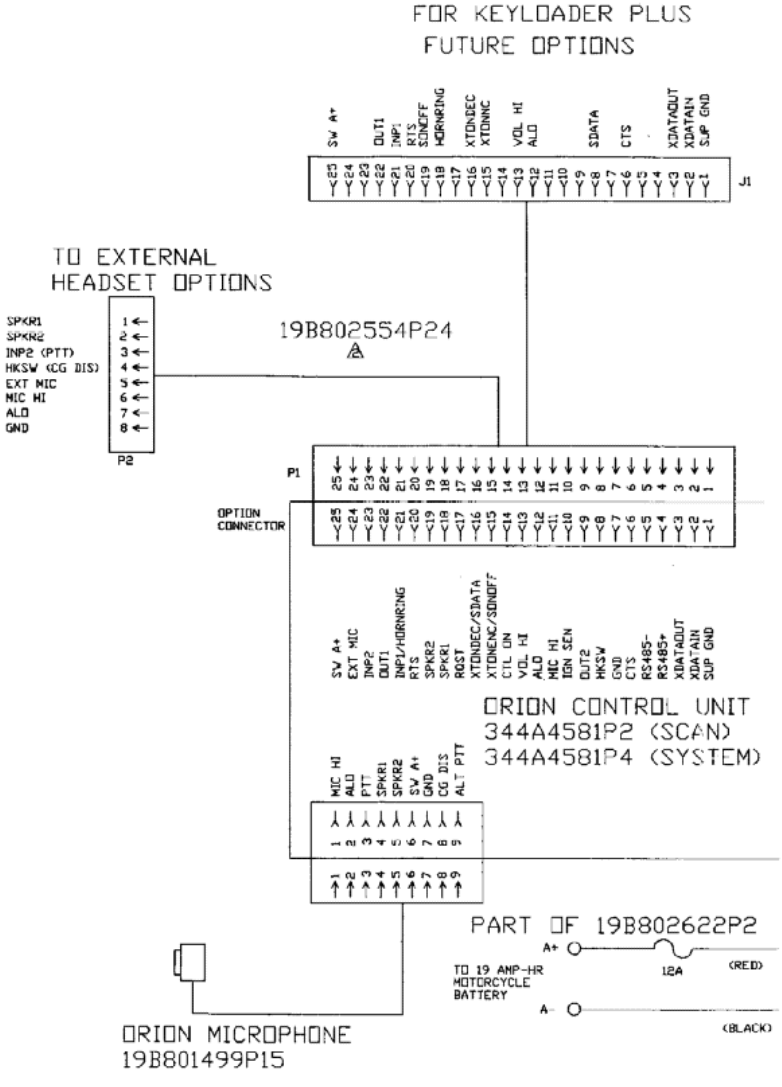

1. LENGTH OF COAXIAL CABLE TO BE ODD MULTIPLE OF 1/4 WAVELENGTH
2. MAY BE DELETED AND REPLACED WITH 19B802554P26 CABLE PLUG.
3. IGN A+ NOT NORMALLY USED IN ORION MOTORCYCLE OPTION AND MAY BE REMOVED.

Interconnection Diagram
(188D6783, Sh. 1, Rev. 2)

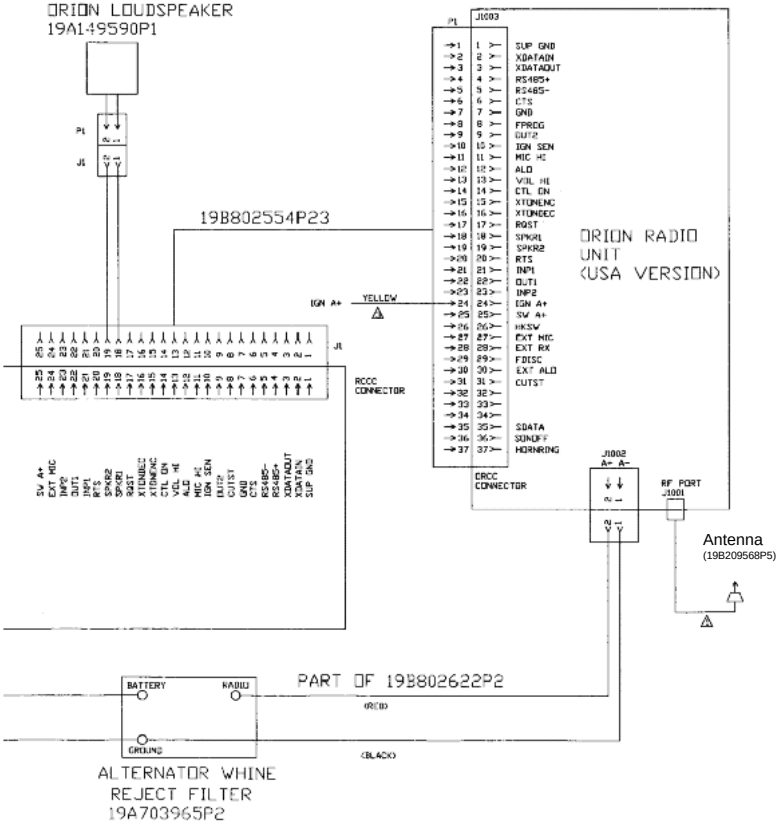

Interconnection Diagram
(188D6783, Sh. 1, Rev. 2)

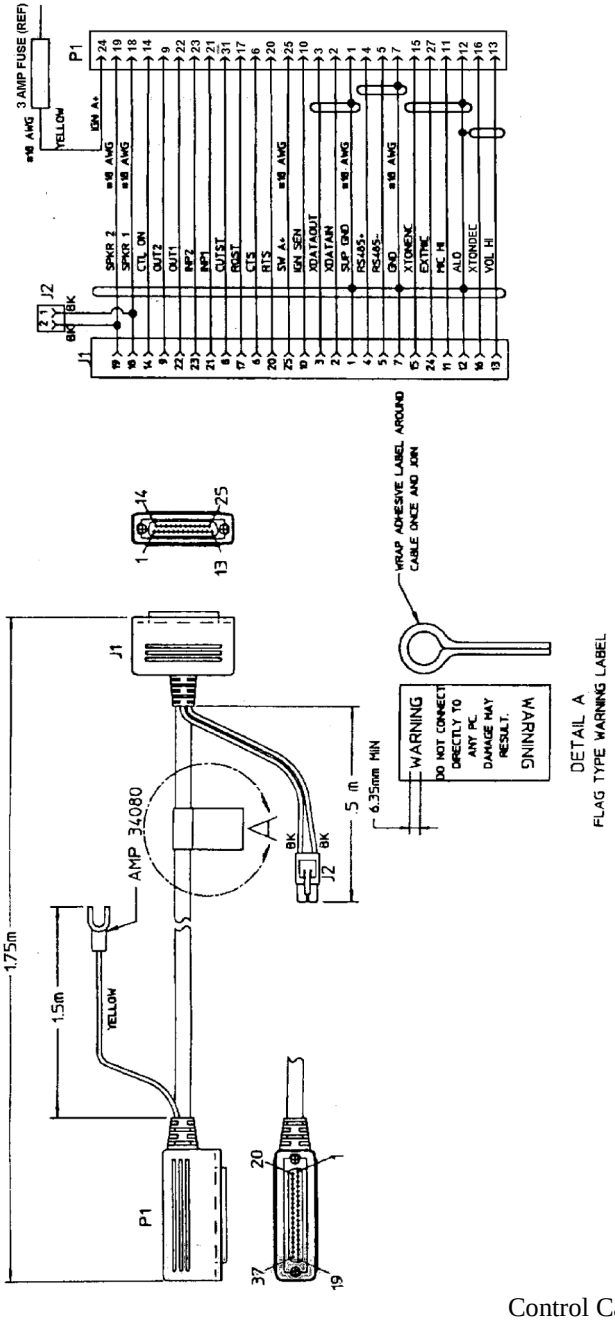

Control Cable
Remote Mount, Motorcycle Extended
(19B802554P23, Sh. 23, Rev. 21)

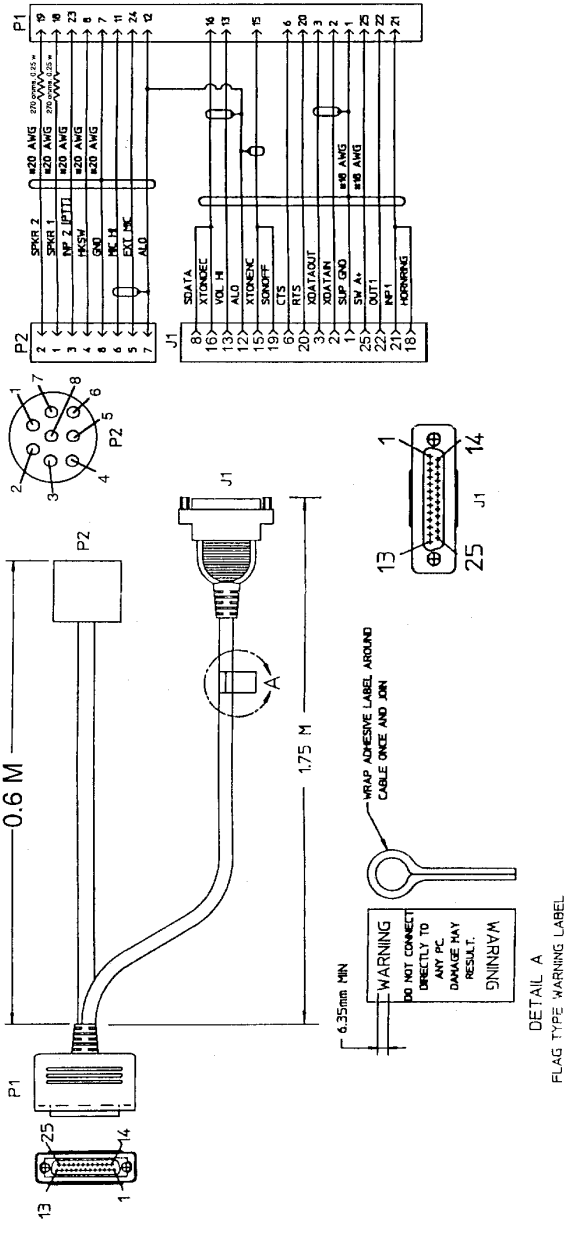

Motorcycle Accessory Cable
(19B802554P24, Sh. 24, Rev. 21)

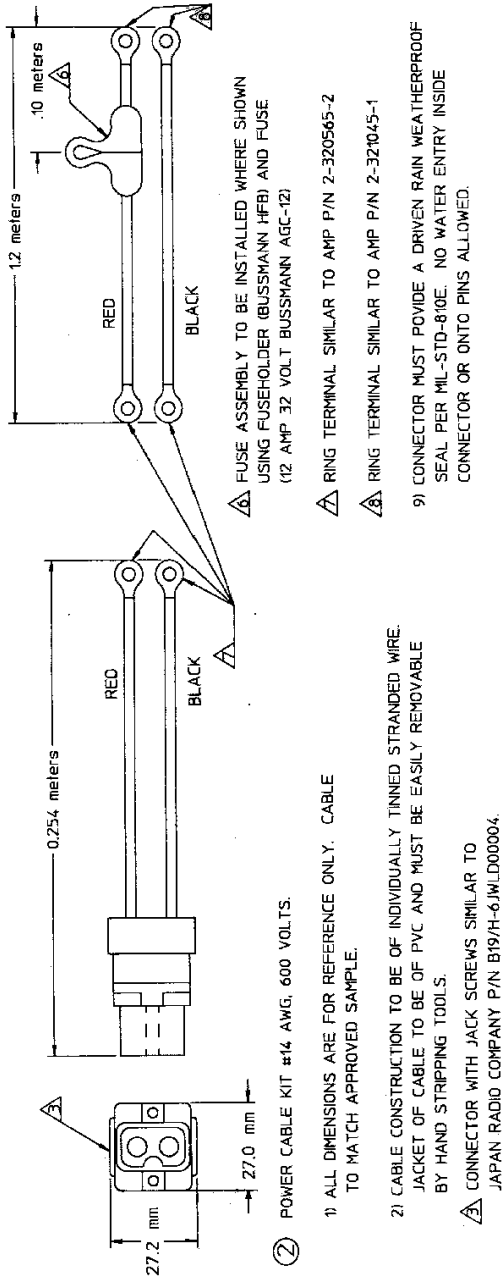

6 FUSE ASSEMBLY TO BE INSTALLED WHERE SHOWN USING FUSEHOLDER (BUSSMANN HFB) AND FUSE (12 AMP 32 VOLT BUSSMANN AGC-12)

7 RING TERMINAL SIMILAR TO AMP P/N 2-320565-2

8 RING TERMINAL SIMILAR TO AMP P/N 2-321045-1

9) CONNECTOR MUST POVIDE A DRIVEN RAIN WEATHERPROOF SEAL PER MIL-STD-810E. NO WATER ENTRY INSIDE CONNECTOR OR ONTO PINS ALLOWED.

2 POWER CABLE KIT #14 AWG, 600 VOLTS.

1) ALL DIMENSIONS ARE FOR REFERENCE ONLY. CABLE TO MATCH APPROVED SAMPLE.

2) CABLE CONSTRUCTION TO BE OF INDIVIDUALLY TINNED STRANDED WIRE. JACKET OF CABLE TO BE OF PVC AND MUST BE EASILY REMOVABLE BY HAND STRIPPING TOOLS.

3 CONNECTOR WITH JACK SCREWS SIMILAR TO JAPAN RADIO COMPANY P/N B19/H-6JWLD00004.

4) BAG AND MARK PART NUMBER 19B802622P2 CLEARLY AND PERMANENTLY ON CABLE AND ON BAG.

5) CONNECTOR MUST WITHSTAND VIBRATION PER MIL-STD-810C, D, & E, HELICOPTER LEVEL (PROCEDURE I).

Power Control Cable
(19B802622P2, Sh. 2, Rev. 3)

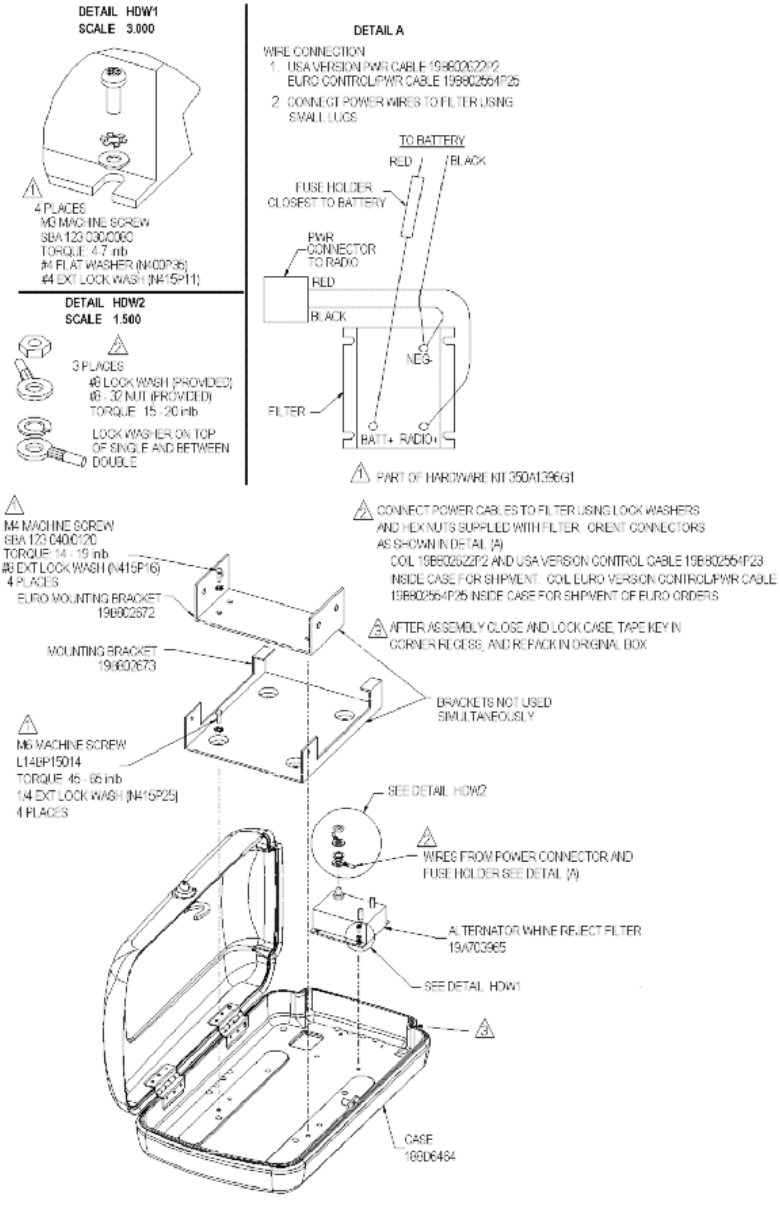

Motorcycle Radio Case Assembly
(188D6465 Sh.1 Rev. 3)

PARTS LISTS

Option HBxxx : Scan Control Unit, 344A4581P2
Option HBxxxx: System Control Unit, 344A4581P4

344A4757P2	Nameplate
344A3723P11	Motorcycle Version Label
19A703965P2	Alternator Filter
19B802554P23	Control Cable (USA Version)
19B802554P24	Accessory Cable
19B802622P2	Power Cable (USA Version)
19B8902671P1	Remote Mount Front Cover
19B8902672P1	Radio Mounting Bracket (USA Version)
19B803225P1	Foam Pad Cover
188D6464P1	Motorcycle Case (Black)
188D6437P1	Case/Antenna Bracket
188D6438P1	Adapter Bracket (for Harley-Davidson Motorcycles)
350A1396G1	Hardware Kit For Motorcycle Case
350A1396G2	Hardware Kit For Case/Antenna Bracket
350A1396G3	Hardware Kit For Control Unit Mounting Bracket
350A1396G4	Hardware Kit For Adapter Bracket (For Harley-Davidson Motorcycles)

Option HBxxx: Field Upgrade Kit
(JAGUAR 725M Radio Conversion, USA Version)

344A3723P11	Motorcycle Version Label
19A703965P2	Alternator Filter
19B802554P23	Control Cable (USA Version)
19B802554P24	Accessory Cable
19B802622P2	Power Cable (USA Version)
188D6464P1	Motorcycle Case (Black)
188D6437P1	Case/Antenna Bracket
188D6438P1	Adapter Bracket (for Harley-Davidson Motorcycles)
350A1396G1	Hardware Kit For Motorcycle Case
350A1396G2	Hardware Kit For Case/Antenna Bracket
350A1396G3	Hardware Kit For Control Unit Mounting Bracket
350A1396G4	Hardware Kit For Adapter Bracket (For Harley-Davidson Motorcycles)

Motorcycle Case Assembly

PART NO.	DESCRIPTION
	Motorcycle Case Assembly 188D6464P1 (Refer To Drawing No. 188D6464)
188D6215P1	Case Top
188D6221P1	Case Bottom
19B804433P1	Hinge (top & bottom)
350A1341P1	Gasket
19B804263P1	Catch Assembly
EMKA 1048-U14	Lock; Assembly (Lock, tumbler, mounting nut, bolt and key)
EMKA 1109-SU10	Key; unmolded
EMKA 1108-U35 or 19B804717P2	Key
19B804715P2	Friction Washer
19B804429P2	Hooked Cam
SBA 123 030/0060	Cap screw (used to secure hinge)

Motorcycle Case/Antenna Assembly Mounting Hardware Kit (Less Bracket)

350A1396G2

PART NO.	DESCRIPTION
N415P25	Washer, Lock (Qty. 4)
N400P35	Washer, Flat (Qty. 3)
N400AP42	Washer, SS, FL, 5/16 (Qty. 4)
N279AP23B6	Hex Nut, Serrated, 5/16 (Qty. 8)
N400P41	Washer, Flat (Qty. 4)
SBA123030/0140	Screw, M3x14 (Qty. 3)
N24P21010	Screw, Cap (Qty. 4)
N24P23014	Screw Hex head, 5-16x7-8 (Qty. 4)

Control Unit/Hand Held Microphone Hardware Kit
350A1396G3

PART NO.	DESCRIPTION
188D6530P1	Control Unit Bracket (Qty. 1)
350A1408P1	Washer, Breakway (Qty. 2)
19B802554P26	Plug, DB25 (Qty. 1)
19B802871P2	Cover, Micophone, Connector (Qty. 1)
118D6556G1	Hanger, Micophone (Qty. 1)
19A115409P4	Washer, Lock (Qty. 2)
N24P21010	Screw, Cap (Qty. 2)
N24P23014	Screw, Hex head HD, 5-16x7 - 8 (Qty. 2)
19A134763P2	Mount, resilient

Motorcycle Adapter Bracket Mounting Kit
350A1396G4

PART NO.	DESCRIPTION
N415P13	Washer, Lock

Hardware Kit
350A1396G1

PART NO.	*DESCRIPTION*
SBA123030/0080	Screw
N415P9	Washer, Lock (Qty 4)
SBA123040/0100	Screw
N415P11	Washer, Lock
L14BP15014	Screw, Hex head, M6 x14
N400P35	Washer, Flat

WARRANTY

A. M/A-COM Private Radio Systems, Inc. (hereinafter "Seller") warrants to the original purchaser for use (hereinafter "Buyer") that Equipment manufactured by or for the Seller shall be free from defects in material, workmanship and title, and shall conform to its published specifications. With respect to any Equipment not manufactured by or for the Seller (except for integral parts of Seller's Equipment to which the warranties set forth above shall apply), Seller gives no warranty, and only the warranty, if any, given by the manufacturer shall apply. Batteries are excluded from this warranty but are warranted under a separate Battery Warranty.

B. Seller's obligations set forth in Paragraph C below shall apply only to failures to meet the above warranties (except as to title) occurring within the following periods of time from date of sale to the Buyer and are conditioned on Buyer's giving written notice to Seller within thirty (30) days of such occurrence:

1. for fuses and non-rechargeable batteries, operable on arrival only.
2. for parts and accessories (except as noted in B.1) sold by Seller's Service Parts Operation, ninety (90) days.
3. for PANTHER™ Series handportable and mobile radios, two (2) years.
4. for Cougar™ Series handportable and mobile radios, two (2) years.
5. for all other Equipment of Seller's manufacture, one (1) year.

C. If any Equipment fails to meet the foregoing warranties, Seller shall correct the failure at its option (i) by repairing any defective or damaged part or parts thereof, (ii) by making available at Seller's factory any necessary repaired or replacement parts, or (iii) by replacing the failed Equipment with equivalent new or refurbished Equipment. Any repaired or replacement part furnished hereunder shall be warranted for the remainder of the warranty period of the Equipment in which it is installed. Where such failure cannot be corrected by Seller's reasonable efforts, the parties will negotiate an equitable adjustment in price. Labor to perform warranty service will be provided at no charge during the warranty period only for the Equipment covered under Paragraph B.3. To be eligible for no-charge labor, service must be performed by an Authorized Service Center (ASC) or other Servicer approved for these purposes either at its place of business during normal business hours, for mobile or personal equipment, or at the Buyer's location, for fixed location equipment. Service on fixed location equipment more than thirty (30) miles from the Service Center or other approved Servicer's place of business will include a charge for transportation.

D. Seller's obligations under Paragraph C shall not apply to any Equipment, or part thereof, which (i) has been modified or otherwise altered other than pursuant to Seller's written instructions or written approval or, (ii) is normally consumed in operation or, (iii) has a normal life inherently shorter than the warranty periods specified in Paragraph B, or (iv) is not properly stored, installed, used, maintained or repaired, or, (v) has been subjected to any other kind of misuse or detrimental exposure, or has been involved in an accident.

E. The preceding paragraphs set forth the exclusive remedies for claims (except as to title) based upon defects in or nonconformity of the Equipment, whether the claim is in contract, warranty, tort (including negligence), strict liability or otherwise, and however instituted. Upon the expiration of the warranty period, all such liability shall terminate. The foregoing warranties are exclusive and in lieu of all other warranties, whether oral, written, expressed, implied or statutory. NO IMPLIED OR STATUTORY WARRANTIES OF MERCHANTABILITY OR FITNESS FOR PARTICULAR PURPOSE SHALL APPLY. IN NO EVENT SHALL THE SELLER BE LIABLE FOR ANY INCIDENTAL, CONSEQUENTIAL, SPECIAL, INDIRECT OR EXEMPLARY DAMAGES.

This warranty applies only within the United States.

M/A-COM
3315 Old Forest Road
Lynchburg, VA 24501
1-800-528-7711

AE/LZT 123 3248/1 R5

NOTES

M/A COM Wireless
3315 Old Forest Road
Lynchburg, Virginia 24501
1-800-528-7711 (Outside USA, 434-385-2400)

Printed in U.S.A.