APPENDIX H: MANUAL

Please refer to the following pages.

Installation Manual
LBI-38636S

MASTR® III
Conventional Base Station

tyco Electronics

M/A-COM

NOTE

Repairs to this equipment should be made only by an authorized service technician or facility designated by the supplier. Any repairs, alterations or substitution of recommended parts made by the user to this equipment not approved by the manufacturer could void the user's authority to operate the equipment in addition to the manufacturer's warranty.

NOTICE!

The software contained in this device is copyrighted by M/A-COM Private Radio Systems, Inc. Unpublished rights are reserved under the copyright laws of the United States.

This manual is published by **M/A-COM Private Radio Systems, Inc.,** without any warranty. Improvements and changes to this manual necessitated by typographical errors, inaccuracies of current information, or improvements to programs and/or equipment, may be made by **M/A-COM Private Radio Systems, Inc.,** at any time and without notice. Such changes will be incorporated into new editions of this manual. No part of this manual may be reproduced or transmitted in any form or by any means, electronic or mechanical, including photocopying and recording, for any purpose, without the express written permission of **M/A-COM Private Radio Systems, Inc.**

Copyright © 1992-2002 M/A-COM Private Radio Systems, Inc. All rights reserved.

TABLE OF CONTENTS

	Page
PRODUCT SPECIFICATION FOR CE MARKED EQUIPMENT	4
MAXIMUM PERMISSIBLE EXPOSURE (MPE) LIMITS	5
DETERMINING MPE RADIUS	5
SAFETY TRAINING INFORMATION	5
STATION SPECIFICATIONS (GENERAL)	7
PUBLICATIONS INDEX	8
SAFETY SUMMARY	9
GROUND THE EQUIPMENT	9
REPLACEMENT OF PLUG-IN CIRCUIT MODULES	9
CAUTION	9
ELECTROSTATIC DISCHARGE - SENSITIVE COMPONENTS	9
DO NOT SUBSTITUTE PARTS OR MODIFY PRODUCT	10
INTRODUCTION	10
CABINET	10
STATION POWER SUPPLY	10
TRANSMITTER/RECEIVER SHELF	10
TRANSMITTER POWER AMPLIFIER	10
UNPACKING EQUIPMENT	10
SITE PREPARATION AND INSTALLATION	10
CABINET INSTALLATION	10
Single 37-inch Cabinet Installation	10
Double Stacked 37-inch Cabinet installation	11
ELECTRICAL CONNECTIONS	12
AC Power	12
Microphone	12
Antenna	12
TELEPHONE LINE CHARACTERISTICS	12
Telephone Lines	12
Types Of Voice Grade Lines	12
Tone Remote Control Systems	14
Voting System Considerations	15
Ordering Voice Grade Telephone Lines	15
Telephone Company Ordering Information	16
TELEPHONE LINE INSTALLATION	16
DC Remote Installation	16
E & M Signaling	16
Tone Remote Installation	17
STATION SETUP	21
SETUP PROCEDURE	21
ALIGNMENT PROCEDURE	23
AUDIO ROUTING AND ADJUSTMENTS	26
TX AUDIO LEVEL ADJUSTMENT	26
REMOTE CONTROLLER TO STATION CONTROL PANEL ADJUSTMENTS	30
LINE OUT LEVEL ADJUSTMENT	30
LINE IN LEVEL ADJUSTMENT	30
DSP LEVEL ADJUSTMENTS	30
REPEATER PANEL INSTALLATION	31
CSI Model 32 Repeater Panel	31
Zetron 38A Repeater Panel	31
ACCESSORIES	33

TABLE OF CONTENTS

Page

ILLUSTRATIONS

Figure 1 - Typical 37-inch MASTR III Stations 9
Figure 2 - 37 Inch Mounting Footprint 11
Figure 3 - 37-Inch Cabinet 11
Figure 4 - Stacked 37-Inch Cabinets 11
Figure 5 - Microphone Connections 12
Figure 6 - T/R Shelf Connections 13
Figure 7 - Typical E & M Signaling Application 18
Figure 8 - METHOD 1 (Single Metallic Pair) 19
Figure 9 - METHOD 2 (Single Metallic, Earth Ground) 19
Figure 10 - METHOD 3 (Metallic Control Pair, Audio Pair) 20
Figure 11 - METHOD 4 (Full Duplex Metallic TX Pair) 20
Figure 12 - Telephone Line Connections 21
Figure 13 - 3-Wire Adapter 21
Figure 14 - Antenna Installation 22
Figure 15 - MASTR III System Module Pot Alignment 24
Figure 16 - T/R Shelf Interface Board 27
Figure 17 - T/R Shelf Interface Board (Rev. A) 28
Figure 18 - T/R Shelf Interface Board (Rev. C) 29

PRODUCT SPECIFICATION FOR CE MARKED EQUIPMENT

The MASTR® III Base Station and Auxiliary Receiver conform to the following Product Specifications.

EUROPEAN STANDARDS:

Safety:	EN60065 (220 VAC applications only)
EMC:	prETS 300 279 (August 1995)
TTD:	Not Applicable

SUPPLEMENTARY INFORMATION:

The MASTR III Base Station and Auxiliary Receiver may be used in both trunked and conventional applications. Neither the MASTR III Base Station nor the Auxiliary Receiver may be connected to leased lines in Europe without an additional line-barrier protection device.

MAXIMUM PERMISSIBLE EXPOSURE (MPE) LIMITS

Do not transmit with this basestation and antenna when persons are within the MPE Radius of the antenna. The MPE Radius is the minimum distance from the antenna axis that ALL persons should maintain in order to avoid RF exposure higher than the allowable MPE level set by the FCC.

FAILURE TO OBSERVE THESE LIMITS MAY ALLOW ALL PERSONS WITHIN THE MPE RADIUS TO EXPERIENCE RF RADIATION ABSORPTION, WHICH EXCEEDS THE FCC MAXIMUM PERMISSIBLE EXPOSURE (MPE) LIMIT. IT IS THE RESPONSIBILITY OF THE BASESTATION OPERATOR TO ENSURE THAT THE MAXIMUM PERMISSIBLE EXPOSURE LIMITS ARE OBSERVED AT ALL TIMES DURING BASESTATION TRANSMISSION. THE BASESTATION OPERATOR IS TO ENSURE THAT NO BYSTANDERS COME WITHIN THE RADIUS OF THE MAXIMUM PERMISSIBLE EXPOSURE LIMITS SHOWN BELOW.

DETERMINING MPE RADIUS

THE MAXIMUM PERMISSIBLE EXPOSURE RADIUS HAS BEEN ESTIMATED TO BE A RADIUS OF 24 FEET MAXIMUM ASSUMING THE HIGHEST EFFECTIVE RADIATED POWER (ERP) ALLOWABLE UNDER FCC RULES FOR BASESTATION ANTENNA INSTALLATIONS. THIS ESTIMATE IS MADE ASSUMING MAXIMUM ALLOWABLE ERP LEVEL BY THE FCC AND 100 PERCENT DUTY CYCLE. THE MPE CALCULATIONS WERE MADE ASSUMING WORST CASE IN EACH BAND WITH RESPECT TO FREQUENCY, ERP AND LIMIT. THE MAXIMUM ALLOWABLE ERP WAS DETERMINED FROM THE APPLICABLE PART 90 RULES REGARDING POWER LIMITATION (90.205, 90.309, 90.635). THE LIMIT USED WAS FOR UNCONTROLLED EXPOSURE. THE FORMULA USED WAS DERIVED FROM OET 65, SECTION 2, EQUATION 4.

SAFETY TRAINING INFORMATION

YOUR M/A-COM MASTR III BASESTATION GENERATES RF ELECTROMAGNETIC ENERGY DURING TRANSMIT MODE. THIS BASESTATION IS DESIGNED FOR AND CLASSIFIED AS "OCCUPATIONAL USE ONLY" MEANING IT MUST BE USED ONLY IN THE COURSE OF EMPLOYMENT BY INDIVIDUALS AWARE OF THE HAZARDS AND THE WAYS TO MINIMIZE SUCH HAZARDS. THIS BASESTATION IS NOT INTENDED FOR USE BY THE "GENERAL POPULATION" IN AN UNCONTROLLED ENVIRONMENT. IT IS THE RESPONSIBILITY OF THE BASESTATION OPERATOR TO ENSURE THAT THE MAXIMUM PERMISSIBLE EXPOSURE LIMITS DETERMINED IN THE PREVIOUS SECTION ARE OBSERVED AT ALL TIMES DURING TRANSMISSION. THE BASESTATION OPERATOR IS TO ENSURE THAT NO BYSTANDERS COME WITHIN THE RADIUS OF THE MAXIMUM PERMISSIBLE EXPOSURE LIMITS.

This basestation has been examined and complies with the FCC RF exposure limits when persons are beyond the MPE radius of the antenna. In addition, your M/A-COM basestation complies with the following Standards and Guidelines with regard to RF energy and electromagnetic energy levels and evaluation of such levels for exposure to humans:

- FCC OET Bulletin 65 Edition 97-01 Supplement C, Evaluating Compliance with FCC Guidelines for Human Exposure to Radio Frequency Electromagnetic Fields.
- American National Standards Institute (C95.1 – 1992), IEEE Standard for Safety Levels with Respect to Human Exposure to Radio Frequency Electromagnetic Fields, 3 kHz to 300 GHz.

- American National Standards Institute (C95.3 – 1992), IEEE Recommended Practice for the Measurement of Potentially Hazardous Electromagnetic Fields – RF and Microwave.

CAUTION

TO ENSURE THAT YOUR EXPOSURE TO RF ELECTROMAGNETIC ENERGY IS WITHIN THE FCC ALLOWABLE LIMITS FOR OCCUPATIONAL USE, ALWAYS ADHERE TO THE FOLLOWING GUIDELINES:

DO NOT operate the basestation with an antenna that would cause an ERP in excess of that allowable by the FCC.

STATION SPECIFICATIONS (GENERAL)

CABINET	37-INCH	69-INCH
	Height 37.0 inches	69.1 inches
Width	21.5 inches	23.1 inches
Depth	18.25 inches	21.0 inches
Weight (note 1)	150 lbs (68 kg)	
Rack Units (RU) (note 2)		
Cabinet capacity	17 RU	33 RU
Radio	8 RU	8 RU
Duty Cycle (EIA) (continuous)	Tx and Rx at 100%	
Operating Temperature	-30°C to +60°C	
Humidity (EIA)	90% at 50°C	
AC Input Power	5 Amps at 120 Vac (-20%) 60 Hz or 3 Amps at 230 Vac (-15%) 50 Hz	
DC Input Power	33 Amps at 13.8 Vdc (transmit, full power) 25 Amps at 13.8 Vdc (transmit, half power) 1.6 Amps at 13.8 Vdc (receive only, standBy) 1.75 Amps at 13.8 Vdc (receive only, 1 watt at service speaker)	
Service Speaker	1 watt at 8 ohms	
Service Microphone	Dynamic	

Notes:

1. Typical station consists of:
   a. One T/R Shelf with plug-in modules.
   b. One Power Amplifier.
   c. One power supply unit.
   d. One cabinet with doors.
2. One rack unit equals 1.75 inches.

INTERFACE

Line Interface	
Line Interface	2-wire or 4-wire *(programmable)*
Line Cancellation	(2-wire) 20 dB amplitude only *(programmable)*
Line Input (line to transmitter)	
Line Terminating Impedance	600 ohms (2-wire or 4-wire)
Line Input Level (adjustable)	-20 dBm to +11 dBm
Frequency Response	300 Hz to 3000 Hz
Line Input (receiver to line)	
Line Terminating Impedance	600 ohms (2-wire or 4-wire)
Line Output Level (adjustable)	zero output to +11 dBm (ref at 1 kHz)
Frequency Response	300 Hz to 3000 Hz, ±1 dB
Remote Control (Tone)	
Control Tones (Hz)	1050, 1150, 1250, 1350, 1450, 1550, 1650, 1750, 1850, 1950, 2050, & 2175
Secur-it	2175 Hz
Function	Programmable
Hold	2175 Hz
DC Remote Control	
Control currents	-2.5 mA, ±6.0 mA, ±11.0 mA

PUBLICATIONS INDEX

MASTR III BASE STATION Systems Combination Package LBI-38775
- T/R Shelf LBI-38637
- System Module LBI-38764
  - LBI-39176
- Power Module LBI-38752

MASTR III PC Programmer TQ-3353

MASTR III Installation Manual LBI-38636

RF Module Test Fixture LBI-38805

MASTR III Utility Handset LBI-38599

RF Package: High Band (136 - 174 MHz) LBI-38754
- Transmit Synthesizer Module LBI-38640
- Receive Synthesizer Module LBI-38641
- Receiver Front End Module LBI-38642
- IF Module LBI-38643
  - LBI-39123
- Power Amplifier LBI-38531
- Duplexer LBI-38763

RF Package: UHF (380 - 512 MHz) LBI-38675
- Transmit Synthesizer Module LBI-38671
- Receive Synthesizer Module LBI-38672
- Receiver Front End Module LBI-38673
  - LBI-39129
- IF Module LBI-38643
  - LBI-39123
- Power Amplifier LBI-38674
- Duplexer LBI-38763

RF Package: 800 MHz LBI-39025
- Transmit Synthesizer Module LBI-39026
- Receive Synthesizer Module LBI-39027
- Receive RF Module LBI-39028
- IF Module LBI-39029
- Power Amplifier ..... (100 W) LBI-39030
  - AE/LZB 119 3521/1
- Power Amplifier ..... (110 W) LBI-39127
- Power Supply LBI-38550

Power Supply (800 MHz) LBI-38551

Emergency Power (Battery Charger) LBI-38625

Auxiliary Receiver VHF LBI-39114
- UHF LBI-39115
- 800 ..... LBI-39113

Voice Guard System Manual LBI-31600

Voice Guard/Aegis LBI-38879
  - LBI-38880
  - LBI-38881

Adaptive Multipath Pop Filter (AMPF) ..... AE/LZT 123 3244/1

Antenna Systems LBI-38983

NOTE: Indented maintenance manuals are included with the header *(cover)* maintenance manual.

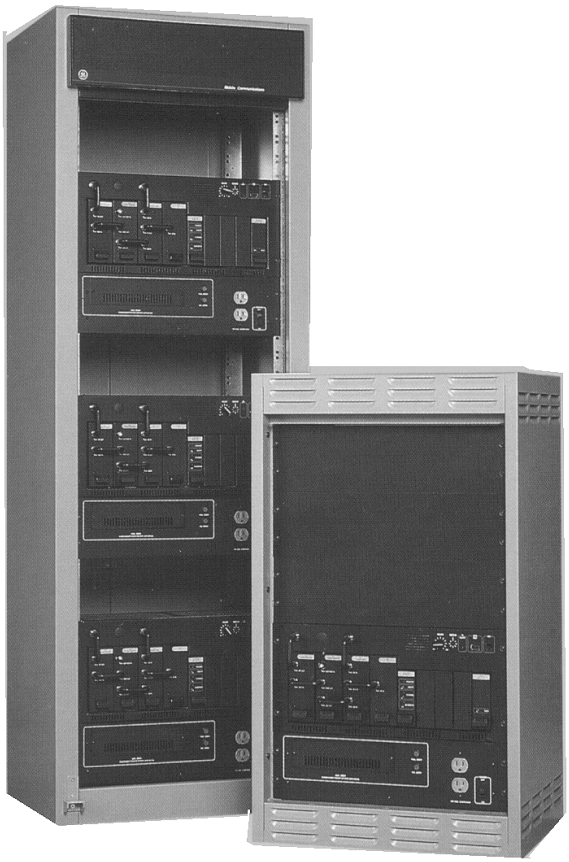

Figure 1 - Typical 37-inch MASTR III Stations

SAFETY SUMMARY

The following general safety precautions must be observed during all phases of operation, service, and repair of this product. Failure to comply with these precautions or with specific warnings elsewhere in this manual violates safety standards of design, manufacture, and intended use of the product. M/A-COM assumes no liability for the customer's failure to comply with these standards.

GROUND THE EQUIPMENT

To minimize shock hazard, the station equipment cabinet must be connected to an electrical ground. The equipment supplied is equipped with a three-conductor AC power cord. The power cord must be plugged into an approved three-contact electrical outlet with the grounding wire firmly connected to an electrical ground (safety ground) at the power outlet. The power cord meets International Electrotechnical Commission (IEC) safety standards.

REPLACEMENT OF PLUG-IN CIRCUIT MODULES

Component or module replacement and internal adjustments must be made by qualified maintenance technicians.

CAUTION

Do Not replace components or modules with power applied.

ELECTROSTATIC DISCHARGE - SENSITIVE COMPONENTS

This station contains CMOS and other circuit components, which may be damaged by electrostatic discharge. Proper precaution must be taken when handling circuit modules. As a minimum, grounded wrist straps should be used at all times when handling circuit modules.

DO NOT SUBSTITUTE PARTS OR MODIFY PRODUCT

Because of the danger of introducing additional hazards, do not install substitute parts or perform any unauthorized modifications to the product.

INTRODUCTION

This manual describes the installation and connections for a typical MASTR III station combination. Information provided includes suggested locations and installation of equipment and hardware, interconnection and assembly diagrams, alignment instructions, and troubleshooting suggestions.

The MASTR III cabinet normally includes the Transmitter/Receiver Shelf, the Transmitter Power Amplifier, and a Station Power Supply. The assemblies are mounted in a 37-inch cabinet. Optional 69- inch or two stacked 37-inch cabinets are available.

CABINET

The system is contained in a 37-inch cabinet with improved ventilation for greater reliability. The cabinet can also house optional equipment such as a Duplexer, Charger, Gell Cell batteries, or Auxiliary Receiver.

STATION POWER SUPPLY

The Station Power Supply provides all necessary power to run the station. It provides 13.2 volts at 33 amps to the station from an AC source. The source voltage depends on the particular area and power sources available. The power supply is normally mounted beneath the T/R Shelf.

TRANSMITTER/RECEIVER SHELF

The MASTR III Transmitter/Receiver (T/R) Shelf contains the station control electronics for dc/tone remote, re-mote/repeater, or repeater only applications. The station control electronics consists of a Backplane board, Power Module, System Module, and an Interface Board. The back-plane also connects the RF Section which consists of the Receiver Synthesizer Module, First IF Module, Second IF Module, and the Transmit Synthesizer Module.

TRANSMITTER POWER AMPLIFIER

The Transmitter Power Amplifier is mounted directly behind the T/R Shelf. Cabling from the output of Power Amplifier will depend on the system configuration.

UNPACKING EQUIPMENT

Unpack the station and carefully inspect each item. If any damage has occurred to the equipment during shipment, immediately file a claim with the freight carrier. AC power adequate to meet system requirements, environmental control, and digital or voice grade phone lines must be available at the site prior to installation.

SITE PREPARATION AND INSTALLATION

CABINET INSTALLATION

The MASTR III station cabinet is designed for servicing from the front. However, the system may also be serviced from the rear when adequate space is available. The cabinet should be mounted on a level, solid surface.

If rear servicing is desired, cabinets should be setup with a minimum of 24-inches of clearance in the rear and between cabinets or wall to permit ventilation and room for the service-man to move between and behind the cabinets.

If space is at a premium or if servicing is to be made from the front only, then cabinets should be setup with a minimum of 18-inches of clearance in the rear and 12-inches between cabinets to permit ventilation. However, access to the rear of the cabinets may still be necessary in order to install or repair antenna or power cables.

Single and double stacked 37-inch cabinets must be securely anchored to the floor according to the footprint shown in Figure 2 and following single or double stacked installation instructions.

Single 37-inch Cabinet Installation

The station provides for front and rear door servicing or front door only servicing in tight space situations. The front and rear of the station must be kept clear of obstructions so that the serviceman can easily remove the front and rear doors for servicing. Also, the front and rear air vent louvers and rear cable outlets must be free of obstructions.

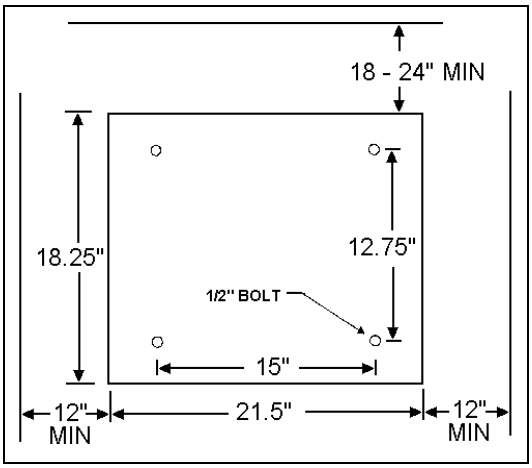

Figure 2 - 37 Inch Mounting Footprint

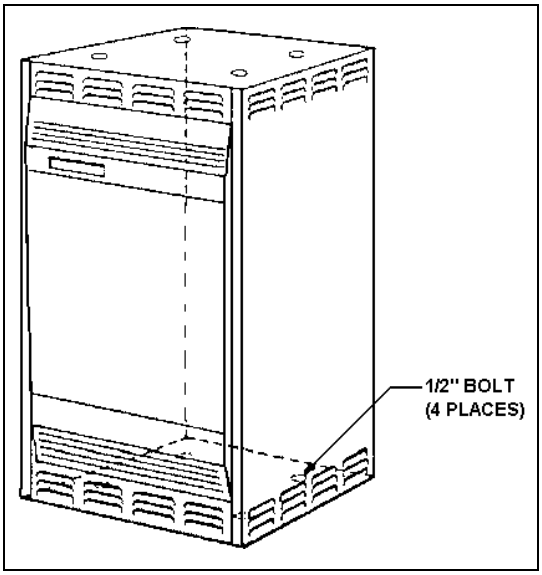

Figure 3 - 37-Inch Cabinet

Using the four holes are provided in the bottom surface of the cabinet, the cabinet must be securely bolted to the floor with 1/2" bolts and anchors as shown in Figures 2 and 3. It will be necessary to remove the front and rear door covers and some internal components to allow access to the bottom securing holes.

Double Stacked 37-inch Cabinet installation

For limited floor space situations, two 37-inch MASTR III cabinets may be stacked one upon the other. This requires that the bottom cabinet be securely bolted to the floor surface and the top cabinet securely bolted to the top surface of the bottom cabinet, as shown in Figure 4.

Ensure first that the floor is strong enough to support the weight of the two cabinet configuration and that adequate ceiling height is available. Ensure the front and rear, of the station cabinets are clear of obstructions so serviceman can easily remove the front and rear doors for servicing. Also, the front and rear air louvers and rear cable outlets must be free of obstructions. Leave a minimum of 12-inches of space on each side of the cabinets to avoid obstructing the louver air vents. With the bottom cabinet in position, secure it to the floor as shown in Figure 2 with 1/2-inch bolts and anchors. Remove the four plastic plugs in the top surface of the bottom cabinet (by squeezing the plastic retaining barbs together from the inside of the cabinet and pushing the plug up and out).

Position the top cabinet on the bottom cabinet. Align the fixing holes and bolt the cabinets securely together using 1/2 inch bolts, washers, and locknuts (supplied in hardware kit 344A3450G7) as shown in Figure 4.

It will be necessary to remove the front and rear covers and some internal components to allow access to the top and bottom securing holes.

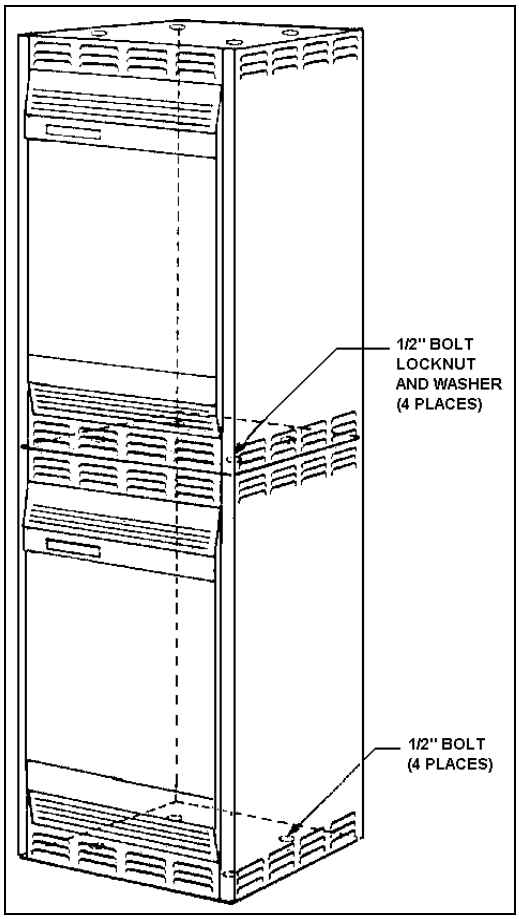

Figure 4 - Stacked 37-Inch Cabinets

ELECTRICAL CONNECTIONS

AC Power

The station will be received with the power cord bundled and stored in the bottom of the cabinet. Remove the twist tie from the AC power cord, unravel and feed the cord through one of the rear cable holes. It may be helpful to remove the grommet from the hole before passing the cord through and reinstalling it afterwards.

A separate 15 to 20 Ampere, 120 Vac, 60 Hertz electrical circuit should be provided for the station. A 120 volt grounded AC outlet for the station should be located within six feet of the lower rear of the cabinet. The power cord for the 120 Vac Power Supply comes with a grounded 120 Vac molded plug attached. Check the electrical code to ensure the power outlet complies with local ordinances.

If a 240 Vac, 60 Hz source is used for the station, an external step-down transformer (similar to 19C307148P1) must be used.

For 230 Vac, 50 Hz applications, the station power supply is equipped with a power cord, less connector, to permit connection to an acceptable electric circuit. A plug meeting local electrical codes must be supplied by the customer. Make sure the station power supply is connected to an outlet having the same configuration as the plug. No adapters should be used in this configuration.

The equipment should be connected to a good earth ground using a ground wire of adequate size. A ground stud is provided for a separate cabinet ground. Use No. 14 or larger wire (depending on local ordinances and system requirements) for connecting the cabinet to a good building ground. After the ground lead from the power cable is connected to the building ground, check for continuity between building ground and the cabinet.

Microphone

The local microphone or utility handset may be attached to the station through the MIC port on the front of the T/R Shelf (Figure 6), the connections are shown in Figure 5.

Antenna

The antenna cable may be routed through the top rear or bottom rear of the cabinet directly to the appropriate connector within the station, depending upon the configuration.

TELEPHONE LINE CHARACTERISTICS

Telephone Lines

The type of telephone lines required for the installation will depend on how the station is controlled and if it is being used for simplex or duplex operation. Generally, both 4-wire Audio and E & M Signaling options are used to interface between the radio and carrier systems. However, 2-wire Audio can be used in the two-way radio portion of the control system if hybrids are installed to provide transition between the 2-wire and 4-wire connections. Usually the E & M Signaling is separated from the audio (separate line) in both 2-wire and 4-wire installations.

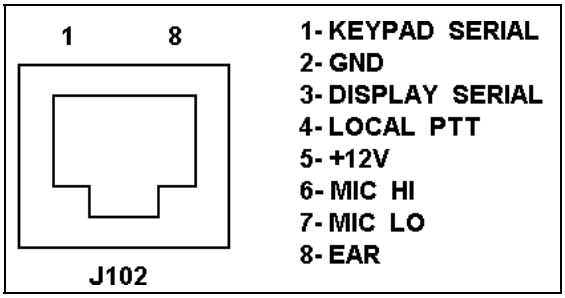

Figure 5 - Microphone Connections

Types Of Voice Grade Lines

Telephone lines are normally obtained from a communications common carrier ("**telephone company**" for our purposes here). When a voice grade (as contrasted to a "**data line**") telephone line is requested, there is no way of knowing just what type of line will be received from the phone company.

In addition, the telephone company may supply one type of line first, and later change it to another type without any notification to the user. One of the following types of telephone line can be expected:

1. Wire lines with no amplifiers
2. Wire lines with amplifiers added to compensate for line loss
3. Facilities derived from carrier (multiplex)

These lines have different operating characteristics, and each must be treated differently. In large systems, all three types of lines can be provided. In long haul applications, a system can consist of two or three of these types of lines in tandem (tied together end-to-end).

The first type is **WIRE LINE WITH NO AMPLIFIERS**. These are the same lines that have been used for years to control dc systems. These are the easiest to work with since they include no problem-causing electronic equipment. These lines are normally found in

less populated areas where the phone company has not yet switched to carrier systems. These lines have a fixed amount of loss, which varies with frequency, temperature, from deterioration of splices, and from moisture getting into the cables. When these cables get old, the phone company sometimes applies DC current to improve the joints and lower the line loss. In this case, the line is not usable for DC control.

Normally, a +10 dBm test tone can be applied to these lines. These lines do not normally include any type of voice limiters.

The second type of line is a **WIRE LINE WITH AMPLIFIERS**. These lines are normally supplied when the loss of available lines is too high. An amplifier or several amplifiers are added to the line to make up for the loss.

One commonly used amplifier is the E-6 repeater. This amplifier will pass DC current and they have been used on DC lines for years. These amplifiers include limiters, which start limiting at somewhere around 0 dBm input to the amplifier. The limiters do not cause any real problems on DC systems since only the voice peaks are clipped. However, special care must be used when applying them to tone remote control systems.

Each amplifier can be adjusted for up to 12 dB of gain. If the loss is more than 12 dB, one or more amplifiers may be added. The amplifier(s) can be placed at any point in the line.

The third type of telephone line is a **Derived Facility** using carrier equipment. Since this is the most complicated, more care is required when connecting radio equipment. This type of line will be available more often in the future.

The telephone company supplies two wires at each end of the circuit. Each two-wire end goes to some point in the circuit where it is converted to a four-wire circuit and then connected to the carrier equipment. A four-wire circuit can be ordered if that is what is required. At the other end, it is taken out of the carrier equipment and converted back to the two-wire circuit. The carrier equipment has a transmit path and a receive path. The gain is adjustable each way.

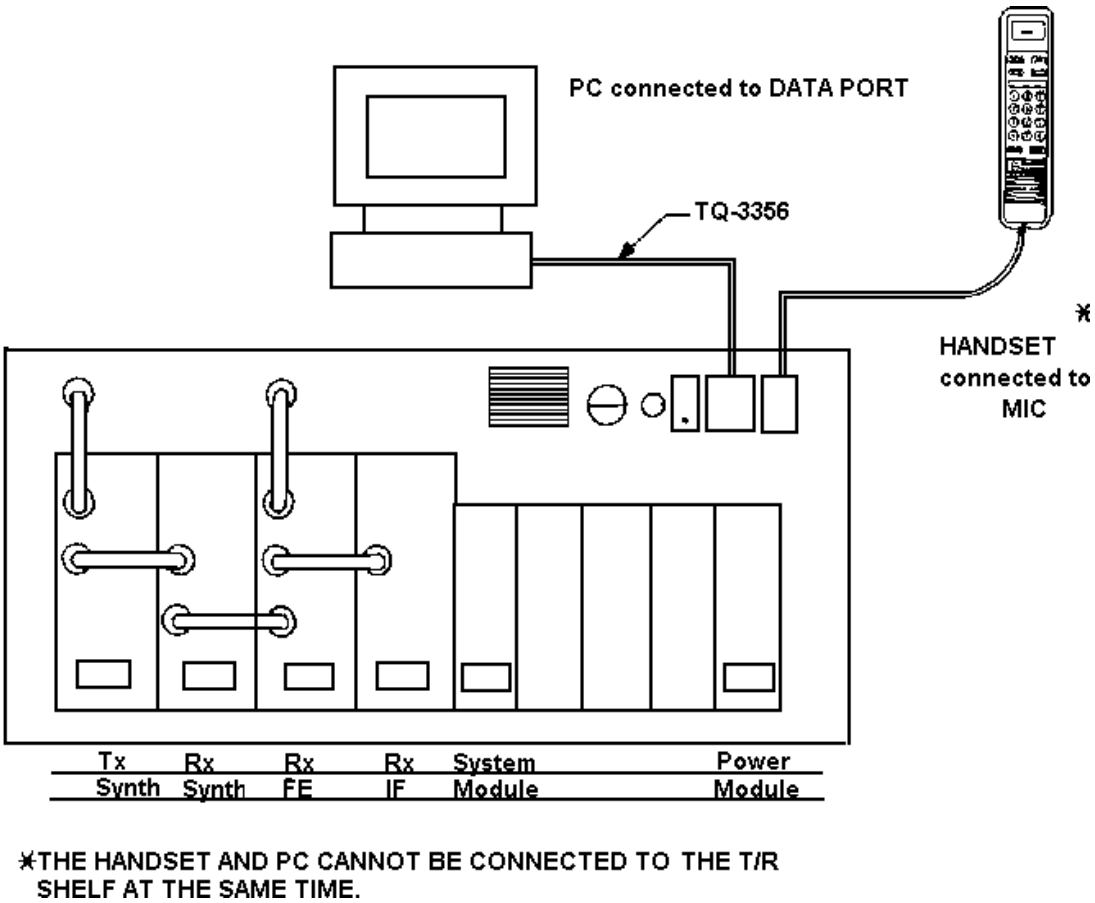

Figure 6 - T/R Shelf Connections

The telephone company wants to see a maximum three-second level of -13 dBm at the carrier equipment as measured on a modified Western Electric 3-type Noise Measuring Set. The telephone equipment will limit the audio if the signal is above -13 dBm at the carrier input. This does not mean that the maximum that can be applied into the two-wire end is -13 dBm. If the radio equipment is a good distance from the carrier equipment, there will be some line loss. If the loss is 5 dB, for instance, then -8 dBm could be applied into the two-wire end. Therefore, the telephone company will have to be asked in each case what level is allowed to be applied at the two-wire end.

If the telephone company checks and finds that too much audio is being applied into the carrier equipment, they will put a pad into the circuit to cut the audio down.

When the phone company is asked what levels can be applied to the line, they will either provide a level in **V**olume **U**nits (**VU**) or test tone. **VU** is average voice, which is generally considered to be 10 dB below test tone. Test tone is a 1000 or 1004 Hz tone used to line up the circuit. Test tone is normally given in dBm. If the radio installer isn't careful, he and the phone company will be talking 10 dB apart. If the phone company says the limit is 0 VU, use +10 dBm for the line-up.

The two wire ends of these lines are normally designed to work with a 600 ohm impedance in and out. The transmit and receive carrier equipment gains are set up for 600 ohm terminations. If the line to the carrier equipment is fairly long, the impedance at which at the two-wire end is not very critical.

If the two-wire end is close to the carrier equipment, however, then the impedance is critical. If the impedance is not 600 ohms, it can cause the gain of the carrier equipment to go up or down. In some cases, feedBack (oscillations) from the receive path to the transmit path will be present. A common problem that causes oscillations in the carrier equipment is gain change, whether from misalignment or other reasons.

American Telephone and Telegraph Company has published a reference for Voice Grade Lines entitled, "**Private Line Interconnections, Voice Applications**" (Publication Number 43201). It covers several types of private line interfaces. There is no publication that covers radio control alone. However, there are several parameters provided in the publication that are important to note.

The 1000 Hz loss design objective is 0 to 10 dB. If the loss is not specified, there will be a loss of 10 dB at 1000 Hz in most cases. The phone company allows itself a **SHORT-TERM** fluctuation of 3 dB and a **LONG-TERM** variation of 4 dB. If a 10 dB loss line at 1000 Hz is specified, up to 14 dB loss can be expected, and the phone company would still be within their design limits.

The loss between 500 and 2500 Hz can be +2 dB and -8 dB relative to 1000 Hz loss. Note that the phone man may refer to this as -2 and +8 in the telephone company way of talking. The loss between 300 and 3000 Hz can be +3 dB to -12 dB relative to the 1000 Hz loss. This says that if there is a line with 10 dB of loss at 1000 Hz, a loss of as much as 18 dB at 2500 Hz, and 22 dB of loss at 3000 Hz can be expected. A loss 4 dB of long-term variation should be added to this.

Noise on this type of line is measured at each end with a Western Electric 3-type Noise Meter. The allowable level of a line from 0 to 50 miles is 31 dBrnC, and for a line from 51 to 100 miles is 34 dBrnC. If this type meter is not available, an AC- VTVM can be used. If there is a noise reading of -50 dBm or less, generally this is considered an acceptable circuit.

Tone Remote Control Systems

In contrast with DC systems, where audio level setting is not as critical, it is important that levels in tone applications be set properly. Failure to do so results in the control function not working properly. For example, after the installation when the user has gained a little experience, the user may find that they are not always picking up the function selected. A little extra time spent at the installation will save many problems of this type later.

This equipment is designed so that the tone sequence consists of either two or three parts. The first part is the "**Secur-it**" tone (2175 Hz) which is sent at the highest level for approximately 125 milliseconds. This is followed by the "**Function**" tone which is sent at a level 10 dB lower for approximately 40 ms. In the case of a transmit function, the "**Function**" tone is followed by 2175 Hz "**Hold**" tone at a level 30 dB down from the "**Secur-it**" tone burst (therefore, it is 20 dB down from the "**Function**" tone burst). This tone continues for the duration of the transmit function. The average voice (0 VU) is sent at the same level as the "**Function**" tone, therefore, the test tone for the voice is sent at the same level as the "**Secur-it**" tone.

The "**Secur-it**" tone must arrive at the base station at no less than -20 dBm. The transmit "**Hold**" tone must arrive at the base station at no less than -50 dBm. The test tone for the voice must arrive at the base station at no less than -20 dBm. Therefore, the limits of system operation are usually established by only three things:

1. The maximum level at 2175 Hz that the phone company will allow to be sent from the most distant point in the system. Normally this will not be higher than 0 dBm. In some cases it can even be less, or on rare occasions it can be +5 or +10 dBm.

2. The loss of the circuit at 2175 Hz. Do not forget the long-term variation of up to 4 dB more.
3. The requirement that the "**Secur-it**" burst must arrive at the base station at no less than -20 dBm.

Normally, most systems will not crowd these limits. However, if the result is a few dB short, consider adding C-1 conditioning (at an added cost). Resist the natural desire to just turn up the tone sending level as this will cause improper system operation.

Increasing the level will cause the "**Secur-it**" tone burst to go into limiting in the phone company equipment. The limited tone causes the "**Secur-it**" tone filter in the base station to ring. This will result in picking up or dropping out functions, which were not selected. **NEVER** allow the "**Se-cur-it**" tone to be in limiting.

There is an easy way to check and see if the "**Secur-it**" tone is in limiting. With the phone lines connected to the equipment at both ends connect an AC voltmeter across the phone line at the base station. Arrange to send a burst of "**Secur-it**" tone long enough to measure the incoming level on the AC voltmeter. Then arrange to send a burst of 1950 Hz "**Function**" tone long enough to measure the incoming level on the AC voltmeter. If the 1950 Hz tone does not arrive 10 dB (1 dB) less than the "**Secur-it**" tone, then the "**Secur-it**" tone is in limiting. It will become necessary to lower the sending level at the remote controller until it is below limiting.

If the audio is high enough to cause the telephone equipment to go into limiting, it will cause amplitude distortion. On a high loss line the amplitude distortion will cause the "**Hold**" tone (2175 Hz) to vary and the transmitter to drop out.

On remote systems using tone control, care must be used when connecting two telephone lines in tandem. For example, for a base station and two remotes, a phone line is ordered to connect the station to the first remote, and a second line to connect the second remote to the first remote. The loss of each line is now added together and the tones from the second remote can not operate the base station. The installer can either specify a low loss on each line, or run each line directly to the base station.

A check with the phone company can determine which approach is the least expensive over a period of time; i. e., an analysis of non-recurring costs versus recurring costs over the expected length of time the circuit will be used.

Voting System Considerations

A voting system uses a continuous 1950 Hz tone on the telephone line when the receiver is squelched. This voting tone is normally sent from the station to the voting selector 3 dB lower than the 1000 Hz test tone level. Most telephone lines have a frequency response which attenuates the 1950 Hz tone with respect to a 1000 Hz test tone, therefore care should be taken to ensure that the correct levels are received at the voting selector.

If the telephone company will not allow a continuous tone as high as -8 dBm to be sent, then a lower loss circuit should be requested or C-1 conditioning added.

When ordering phone lines for a voting system, if possible, all lines should be of the same type. Different telephone line responses will cause the voter to prefer one signal over others.

It is improper system design to have the received signal selection biased by a "**poorer**" telephone circuit. Many telephone companies will add pads to build out the lines. If this is considered when the lines are ordered, it should not be difficult to build all of the lines out to have the same frequency response.

Ordering Voice Grade Telephone Lines

If a standard voice grade circuit is ordered, and the loss is not specified, the following will normally result:

1. Loss at 1000 Hz will be 5 to 10 dB; normally 10 dB
2. Long-term variation 4 dB
3. Amplitude distortion (frequency response) Referenced to 1000 Hz; + = more loss 300 to 3000 Hz: -3 to +12 dB 500 to 2500 Hz: -2 to + 8 dB
4. Noise: 31 dBrnC maximum
5. Frequency translation error: 5 Hz
6. Normal impedance: 600 ohms
7. Maximum permitted signal into the line: -6 dBm to -13 dBm in-band three second average (the level arriving at the carrier equipment cannot be more than -13 dBm).

By adding C-1 conditioning, the loss changes to: Amplitude distortion (frequency response) Referenced to 1000 Hz; higher frequency = more loss 300 to 2700 Hz: -2 to +6 dB 1000 to 2400 Hz: -1 to +3 dB

One added advantage to C-1 conditioning is that the voice quality will be improved by boosting the high frequency components.

Telephone Company Ordering Information

When ordering a telephone line, the following must be considered:

1. Type of circuit:
   Voice grade, 2-wire termination, for radio control, and tone remote system - send/ receive; voting system - receive only.
2. DC continuity not required
3. Impedance: 600 ohms 20%
4. Line Loss:

   Tone remote system:

   Sends 2175 Hz tone for 125 milliseconds, and it must arrive at the base station at no less than -20 dBm including long-term variation. Average voice is 10 dB below the 2175 Hz tone burst.

   Voting system:

   Sends a continuous 1950 Hz tone when the receiver is squelched, and it must arrive at the voting selector at no less than -30 dBm including the long-term variation.
5. C-1 conditioning if necessary. (If two phone lines are to be tied in tandem, it is usually proper to specify C-1 conditioning.)
6. If more than one phone line is to be used, a block diagram showing locations and type of equipment to be used should be provided the telephone company.

TELEPHONE LINE INSTALLATION

DC Remote Installation

Two-Wire Operation

For two-wire operation, connect the pair to TB101-3 and -4. If the remote control unit at the other end is an RCN 1000, use J3-3 (red) and -4 (green). Refer to Methods 1 and 2 in Table 1 and associated illustration for examples (Figures 8 & 9). Jumpers should be placed on P104-1 to P104-2 and P105-1 to P105-2 on the Interface Board. Figures 15 & 17 shows the location of Interface Board connectors and jumpers.

> **NOTE**
>
> Polarity must be maintained, if the metallic control pair is being used for DC control.

Four-Wire Operation

For examples, refer to Methods 3 and 4 in Table 1, and the associated illustrations showing the different methods (Figures 10 & 11). Jumpers should be installed on P104-2 to P104-3 and P105-2 to P105-3 on the Interface Board.

E & M Signaling

E & M lead signaling systems derive their name from certain historical designations of the signaling leads on circuit drawings. An "**M**" lead is associated with the trans**M**it function or **M**outh, while the "**E**" lead is associated with the rec**E**ive function or **E**ar. In two-way radio systems with remote control, E & M Signaling can be the only type of control offered by the available carrier circuits.

Generally, both 4-Wire Audio and E & M Signaling options are used to interface between the radio and carrier systems. However, 2-Wire Audio can be used in the two-way radio portion of the control system if hybrids are installed to provide transition between the 2-Wire and 4-Wire connections. Usually the E & M Signaling is separated from the audio (separate line) in both 2-Wire and 4-Wire installations.

Figure 7 illustrates a typical interface between a two-way radio system and a multiplex/microwave system. The Remote Control Console and Base Station are equipped with the E & M Signaling Option and the 4-Wire Audio Option. The console provides a regulated -48 Vdc output (or -24 Vdc with minor modifications) to the "**M**" lead when the **TRANSMIT** switch is pressed. This -48 Vdc activates a tone encoder (usually 3825 Hz) in the multiplex rack. The tone encoder modulates the carrier frequency, which is transmitted over the microwave link.

At the station end of the microwave link, the signal is demodulated and the 3825 Hz tone operates a tone decoder in the multiplex rack. The output of the decoder results in a contact closure, which applies +48 Vdc (or +24 Vdc) to the control shelf. This voltage should be connected between TB101-1 and TB101-6 on the Interface board. Jumpers on P104 and P105 of the Interface Board should also be removed. If +48 Vdc is being used, resistors R116 and R118 on the Interface Board should also be removed.

When the system is configured in this manner, approximately +8 milliamperes flows through the DC control decode circuitry on the backplane. This will cause the T/R Shelf to decode a +6mA control current to key the transmitter and route line audio to the transmitter.

Tone Remote Installation

Jumpers P104 and P105 located on the Interface Board are not required and should be removed. Refer to the sections on TELEPHONE LINE CHARACTERISTICS and LEVEL ADJUSTMENTS for additional installation information. Line connections are made to TB101 or J101 on the T/R Shelf's Interface Board. TB101 and J101 are connected together and each has the same pin out.

Two Wire Tone Remote

When the control shelf is used with a two wire tone re-mote/console, the remote control pair should be connected to TB101-3 and TB101-4.

Four Wire Tone Remote

When the control shelf is used with a four wire tone re-mote/console, the remote control transmit pair (which modulates the transmitter) should be connected to TB101-2 and -5. The remote control receive pair (which listens to the receiver) should be connected to TB101-3 and TB101-4.

Connections

Telephone line connections may be made on the terminal block (TB101) or with an RJ11 connector to J101. The telephone line cable may be routed through the top rear or bottom rear of the cabinet (Assembly Diagram). The telephone line connections are shown in Figure 12.

Table 1 - Wire Line Installation Methods

METHOD	DESCRIPTION	PROCEDURE	ADVANTAGES OR DISADVANTAGES
1	Single metallic pair (the control currents are simplexed to line, a two wire cable is required).	a. Connect the metallic pair to TB101-3 and -4. b. Jumper P105-1 to P105-2, and P104-1 to P104-2 on the Interface Board.	Economical: Dependable where earth ground currents may be large or good earth grounds cannot be obtained. The keying clicks will be heard on parallel remotes.
2	Single metallic pair (the control currents are simplexed line to earth ground, a two wire cable is required).	a. Connect the metallic pair to TB101-3 and -4. b. Jumper P105-1 to P105-2 to P104-1 on the Interface Board and connect TB101-6 to earth ground.	Economical: Minimizes keying clicks in paralleled remotes but large ground currents may result in interference with control function if located near sub-stations.
3	One voice grade circuit for bi-directional audio and the other a metallic pair of control voltages.	a. Connect audio pair to TB101-3 and TB101-4. b. Remove jumpers from P104 and P105 on Interface Board. c. Connect control metallic pair to TB101-1 and -6 on Interface Board.	Provides excellent performance by eliminating keying clicks and providing no path for ground loop current, but requires two pair.
4	Single metallic pair for transmit audio and control Currents. Single voice grade circuit for receive audio. A four wire line is required.	a. Connect the transmit metallic pair to TB101-2 and -5 on Interface Board. b. Connect a jumper from P104-3 to P104-2, and P105-3 to P105-2. c. Connect the remote receive pair to TB101-3 and -4	Provides full duplex operation in which the remote can operate in receive and transmit simultaneously. But, requires two pair.

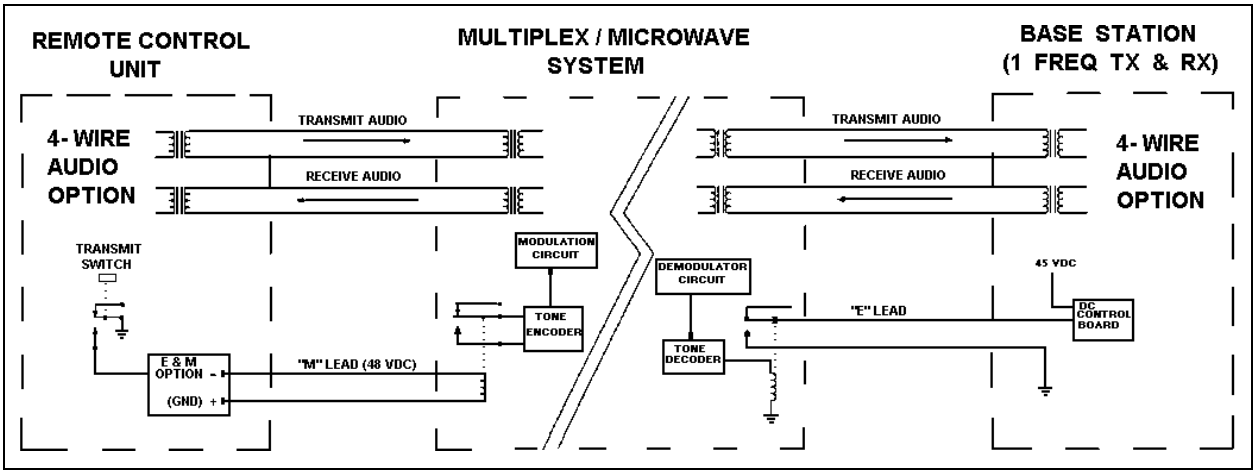

Figure 7 - Typical E & M Signaling Application

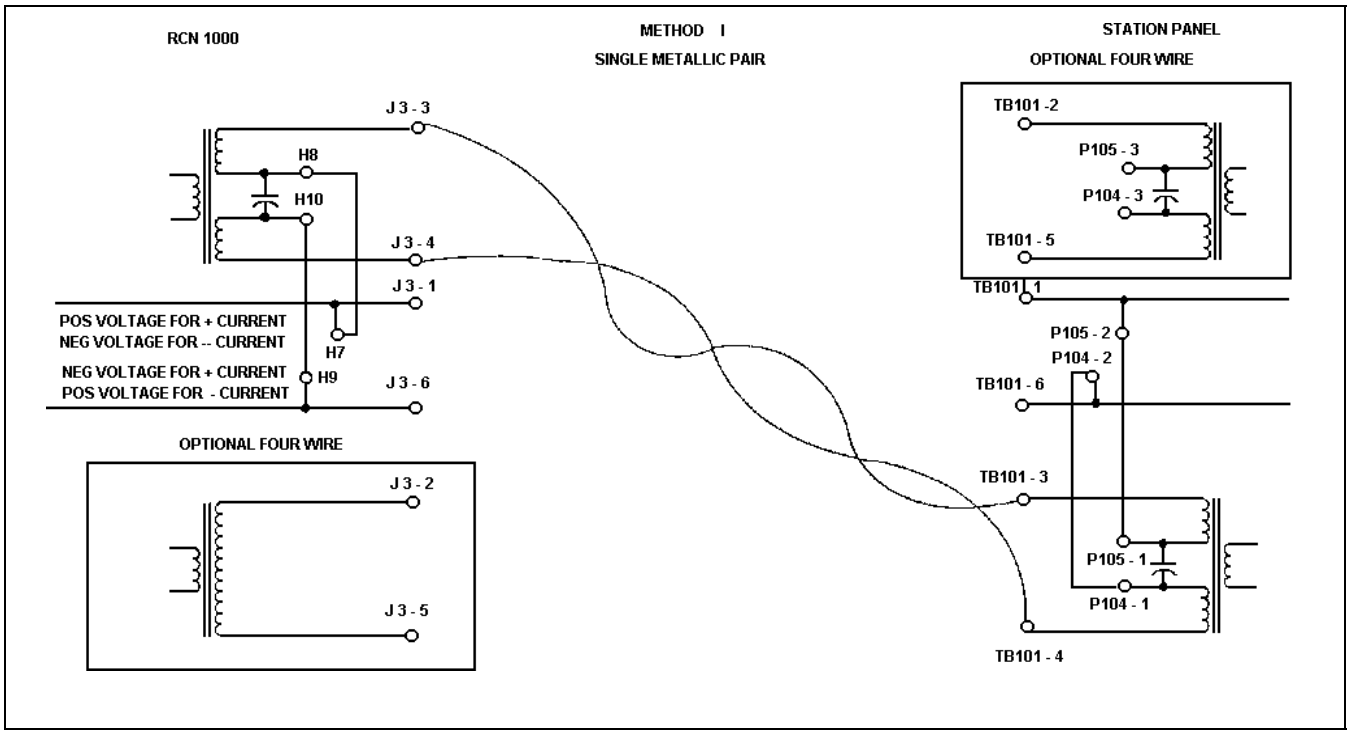

Figure 8 - METHOD 1 (Single Metallic Pair)

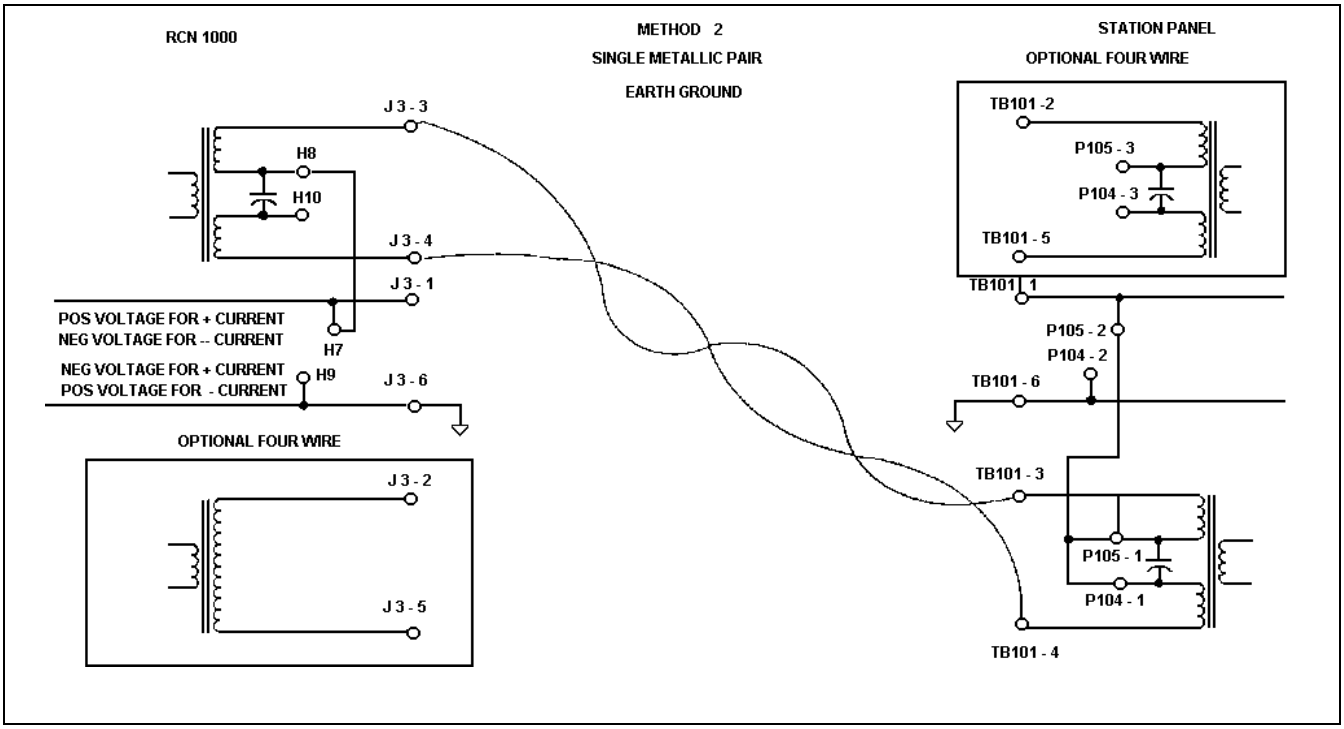

Figure 9 - METHOD 2 (Single Metallic, Earth Ground)

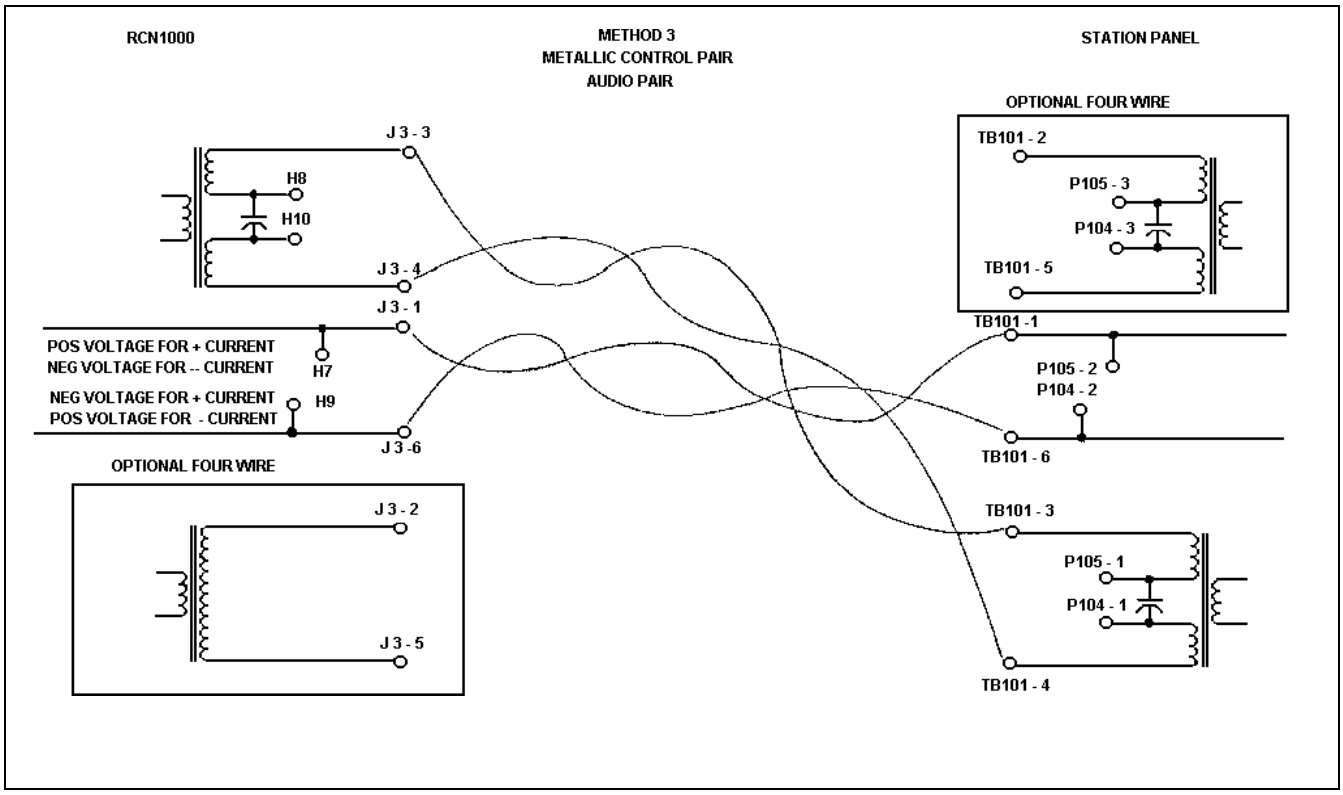

Figure 10 - METHOD 3 (Metallic Control Pair, Audio Pair)

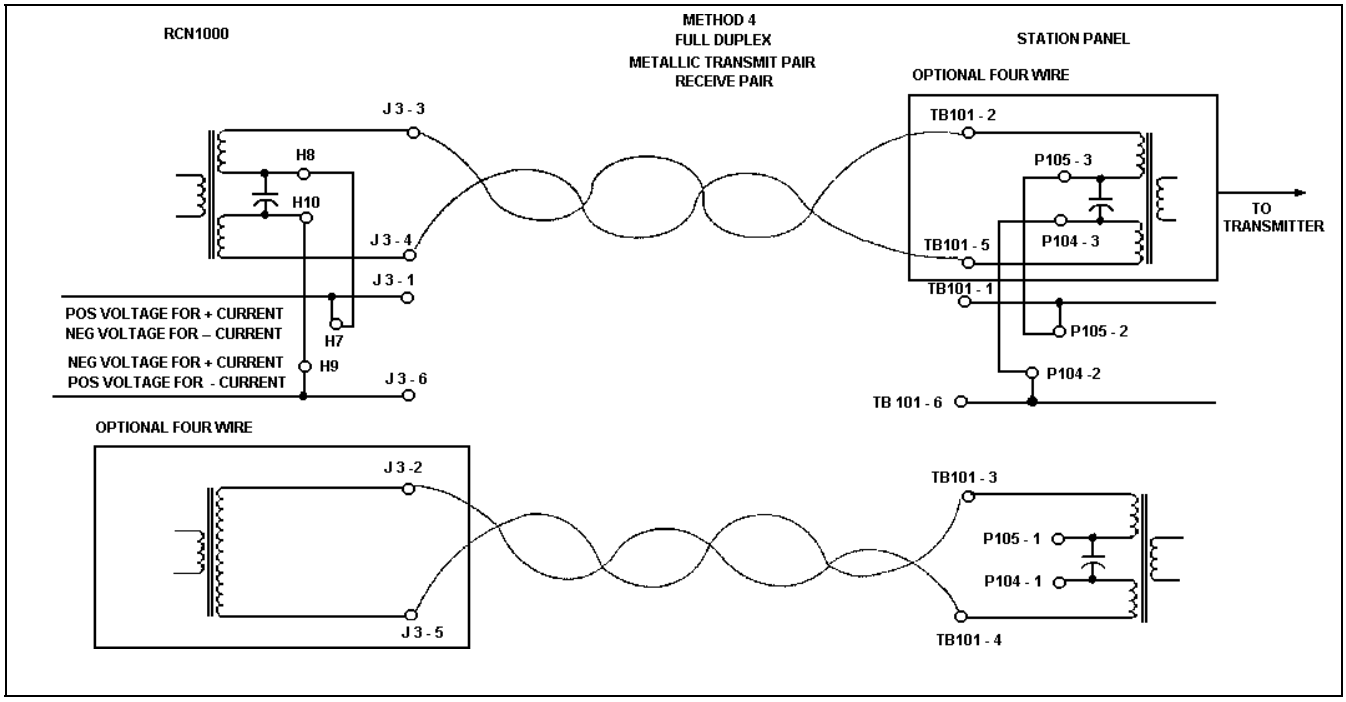

Figure 11 - METHOD 4 (Full Duplex Metallic TX Pair)

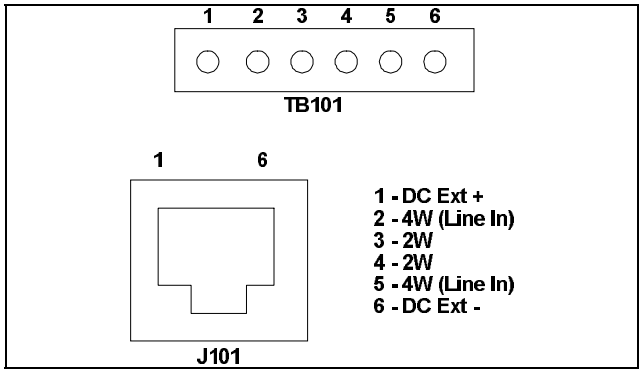

Figure 12 - Telephone Line Connections

STATION SETUP

The MASTR III station comes pre-programmed and ready to install, the only adjustments needed are the required Line Output Level, the Line Input Level necessary to produce Standard Deviation, and the Line Cancellation for 2-wire Tone Remote Orientation. These adjustments can be made using the PC Programming option TQ-3353, or Utility PC software TQ-0619 with the Utility Handset SPK9024.

SETUP PROCEDURE

Use the following procedures when setting up the station using a **P**ersonal **C**omputer (**PC**). If the Utility Handset is plugged into the MIC connector, it must be removed prior to resetting the system and using the PC Programming software. Levels may be adjusted using the **MASTRUTL** program supplied with the PC Programming package. A **RESET** (on the Power Module) should be initiated before programming starts.

1. Ensure proper connections are made to receive and transmit antenna(s). See interconnect diagram.
2. Plug the power cord from the base station into a 120 Vac, 60 Hz power source.

> **NOTE**
>
> If a 230 volt, 50 Hz source is used, connect the locally required plug.

3. Connect the PC computer's serial COM port and the DATA PORT on the front of the T/R Shelf using the TQ-3356 Interconnect cable (19B801348P2).

   If the computer has a 25-pin connector instead of a 9-pin connector, an adapter must be installed. The adapter may be either purchased or locally manufactured. Making your own requires only three wire connections *(Figure 13).*

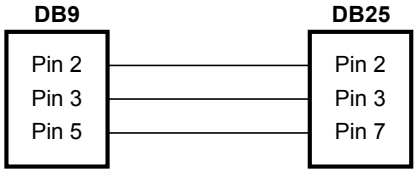

Figure 13 - 3-Wire Adapter

4. If the system requires control by a remote unit, the following interconnection must be made. Connect the wires from the remote unit to the six-pin terminal block (TB101). Use the following information when making connections:
   TB101, Pins 3,4 - Line Input/Output for 2-wire DC and Tone control.

   or

   Line Output for 4-wire DC and Tone control.

   TB101, Pins 2,5 - Line Input for 4-wire DC and Tone control.

   TB101, Pins 1,6 - Line Inputs for E & M signaling, DC Remote Control.

Table 2 - DC Remote Control

	P104	P105	COMMENTS
2-wire	1 to 2	1 to 2	Both jumpers back
4-wire	2 to 3	2 to 3	Both jumpers forward

> **NOTE**
>
> P104, Pin 1 and P105, Pin 1 are on the far side of the connector if you are facing the front of the base station. Refer to Figures 16 thru 18.

5. The SQUELCH and VOLUME adjustments should be made for proper operation. Unsquelch the receiver by turning the SQUELCH adjustment counter-clockwise. *(If your base station has Channel Guard, also activate the CG switch.)* Verify that unsquelched noise is going to the speaker by increasing the VOLUME *(clockwise).* Adjust the SQUELCH pot for critical squelch (squelch just closes).
6. Following the initial setup, the MIC port may be used for one of the following purposes:
   a. Connecting the local microphone equipped with a modular connector.
   b. Connecting the multi-purpose Utility Handset.

Table 3 - Station Connectors

CONFIGURATION	STATION TERMINATING CONNECTOR	LOCATION
Simplex (T/R Relay)	N-Type Female	Antenna Switch
Duplex (Internal Duplexer)	N-Type Female	Duplexer
Duplex (External Duplexer)	BNC Female (Rx) N-Type Female (Tx)	T/R Shelf Low Pass Filter

CAUTION

TO ENSURE THAT YOUR EXPOSURE TO RF ELECTROMAGNETIC ENERGY IS WITHIN THE FCC ALLOWABLE LIMITS FOR OCCUPATIONAL USE, ALWAYS ADHERE TO THE FOLLOWING GUIDELINES:

DO NOT operate the basestation with an antenna that would cause an ERP in excess of that allowable by the FCC.

ANTENNA SYSTEM REQUIREMENTS

To supplement the manufacturer's intructions, the following hints will be valuable to you when installing your antenna.

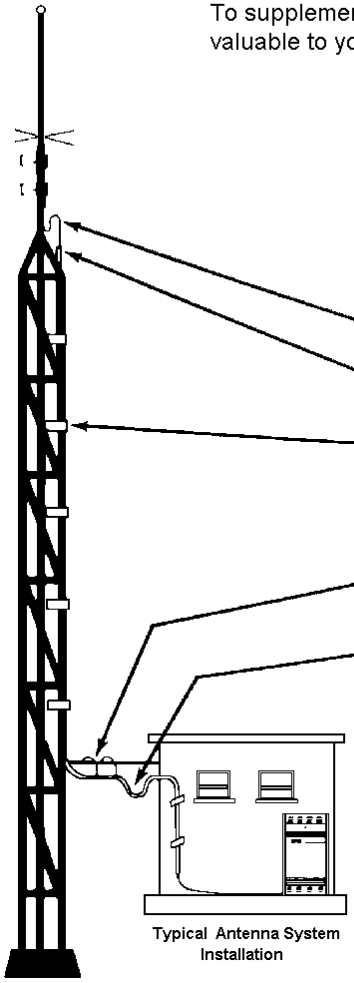

Typical Antenna System Installation

- Antenna should not be located in an area of a strong "electrical noise". It should be located at least several hundred feet from noise caused by: high tension power lines, internal combustion engines, heavy electrical machinery, and other "radio frequency devices".
- Check transmission line and connectors for opens and shorts before installing.
- Leave some slack between top of the transmission line and antenna.
- Tape, or otherwise protect in-line fittings from weather.
- Clamp the line to the tower every five feet.
  Use wraplock on Heliax® or RG-17U type cable.
  Use vinyl tape on Foamflex® or RG type cable.
- Use "messenger" cable to support transmission line from tower to radio building, if distance is more than eight feet.
- Make a "drip-loop" in the transmission line just before line enters the building.
- Check continuity between transmission line ground and building ground before transmission line is attached to station. They should be at the same potential.
- Keep transmission line away from all sharp edges. Do not make sharp bends.

Upon completion of antenna installation, measure and record the antenna system V S W R at the transmitter antenna connector.

CAUTION

The use of any ferromagnetic material, such as nickel-plating, stainless steel, Invar or Kovar, must be avoided in multi-carrier systems. The presence of several high-power signals will produce fifth - order intermodulation products that lie in the base receiver band. All connectors and filters connected in the transmitter combinet - antenna path must be examined to preclude the use of ferromagnetic material. Silver - plated brass is the preferred material.

Installations utilizing a single transmit/receive antenna should have all ferromagnetic material replaced with silver - plated brass components.

Figure 14 - Antenna Installation

ALIGNMENT PROCEDURE

Alignment of the MASTR III base station was performed prior to shipment. The factory assumed the following characteristics:

1. There is no loss or gain for repeated audio deviation.
2. If a remote exists, it is connected to the base station through a telephone line with 10 dB of loss.
3. The base station drives the line output at -10 dBm with nominal receive deviation.

The base station should deliver –10 dBm to the line with a signal applied with 3kHz deviation. A –10 dBm audio signal applied to the Station Line In should result in transmitter deviation of 3 kHz.

These values may be altered by following one of the alignment procedures as provided. For minor adjustments you may want to adjust only one or two digital potentiometers or leave the setting as set. In any case, it is important to carefully examine the ALIGNMENT DIAGRAM (Figure 15) which follows:

> **NOTE**
>
> It is a good idea to record the potentiometer settings on paper, until you're familiar with all the digital potentiometer setting tools.

Test Equipment Required

The following test equipment is required to align the MASTR III base station:

- Audio Oscillator
- AC Voltmeter
- RF Signal Generator
- Deviation Monitor
- Handset or PC Computer (with diagnostic utility TQ-0619)

Procedure

Terminate both the Line Input (T101-3,4) and Line Output (T101-2,5) with a 600 ohm load. This step must be completed for all parts of the alignment to ensure proper level setting (*Table 4*).

1. Line In
   - Set Line Input digital potentiometer (Pot) **LI** to 0.

Table 4 - Normal System Deviation

	System Deviation
Standard (25 Hz kHz Bandwidth	3.0 kHz
NPSPAC	2.4 kHz
Narrow (12.5 kHz Bandwidth)	1.5 kHz

2. **C**hannel **G**uard (**GC**)
   - If the station is **not** programmed for CG, set CG Pot to 0.

For a station programmed with CG encode follow these steps:

- Execute a REMOTE PTT on the System Module by flipping the **REM PTT** switch on the front panel.
- Adjust the CG Pot as needed *(Table 5)*.

Table 5 - Channel Guard Deviation

	Channel Guard Deviation
Standard (25 Hz kHz Bandwidth	0.750 kHz
NPSPAC	0.600 kHz
Narrow (12.5 kHz Bandwidth)	0.500 kHz

- Repeat for each channel.
- **Disable CG** decode and encode for the remainder of the station alignment.

3. TX Limiter
   - Preset the following digital potentiometer values:
     Repeater Gain (RG) 1023
     Compressor Threshold (CT) 5000
     Compressor Gain (CP) 1023
     DSP Line In (DLI) 100
   - Apply a 1000 Hz tone, at the maximum system audio level, across the 600 ohm load termination to the Line Input.

     This level is the **secur-it** level, and is usually 0 dBm across 600 ohms, (775 mVrms). The "maximum system audio level" is the absolute highest signal level that will be present on the line and must be 10 dB higher than average voice audio level.
   - Execute a REMOTE PTT on the System Module by flipping the **REM PTT** switch on the front panel.
   - Adjust the **TX** Pot to maximum system deviation *(Table 6)*.

Table 6 - System Deviation

	System Deviation
Standard (25 Hz kHz Bandwidth	3.75 kHz
NPSPAC	3.0 kHz
Narrow (12.5 kHz Bandwidth)	1.75 kHz

- Remove the 1000 Hz tone from the Line Input and the REMOTE PTT.
- Repeat this step for every channel.

4. Repeater Gain
   - If the station is **not** a repeater, leave the Repeater Gain pot **RG** at 1023.
   - If the station **is** a repeater, apply an "on channel" RF signal modulated with a 1000 Hz tone at 60% of system deviation to the receiver.
   - Adjust **RG** pot for 60% of system deviation *(Table 8).*

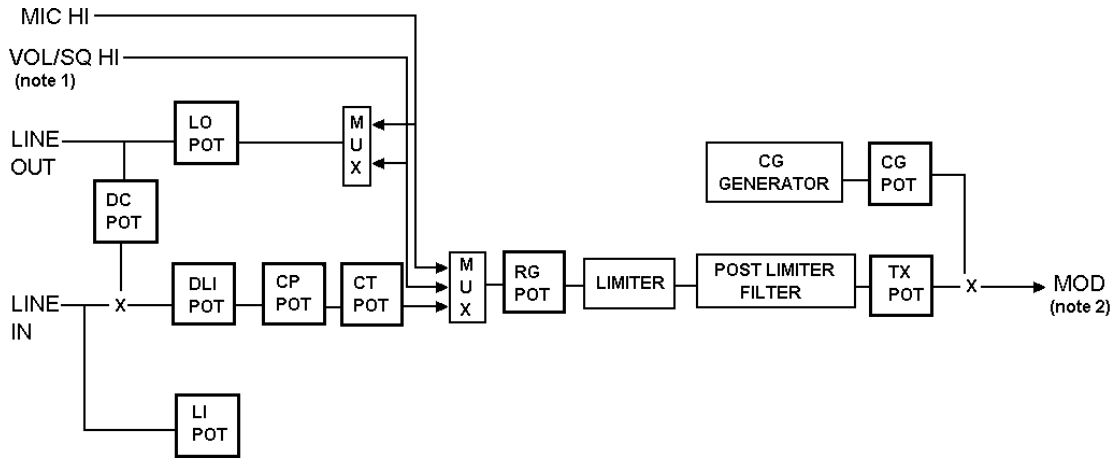

Figure 15 - MASTR III System Module Pot Alignment

Table 7 - Digital Potentiometer Settings

	LO POT	DC POT	LI POT	DLI POT	CP POT	CT POT	RG POT	TX POT	CG POT
	Line Out	DSP Line Cancellations	Line In	DSP Line In	DSP Compressor Gain	Comp Threshold	Repeater Gain	Transmit	Channel Guard
HANDSET NUMBER	1	5	3	6	7	2	2	2	1
POT PAGE (Note 3)	P_1	P_1	P_1	P_1	P_1	P_2	P_3	P_1	P_1
HANDSET DISPLAY	P LO	P DC	P LI	P DI	CP	CT	RG	P TX	P CG
DEFAULT VALUES	45	75 (2W) 0 (4W)	0	34 (2W) 28 (4W)	1023	1890	1023	127 150*	123 0*

*no Channel Guard

NOTES: 1) VOL/SQ sensitivity: 1000 mV rms = 3 kHz peak deviation (System Module, Pin, B2)
2) MOD sensitivity: 1000 mV rms = 5 kHz peak deviation (System Module, Pin, C3)
3) Refer to Handset manual, LBI-38599, for instructions on page selection.

Table 8 - 60% of System Deviation

	60% of System Deviation
Standard (25 Hz kHz Bandwidth	3.0 kHz
NPSPAC	2.4 kHz
Narrow (12.5 kHz Bandwidth)	1.5 kHz

- Remove the signal from the receiver.

5. Line Input Sensitivity and Compression
   - If not a remote station, set the DSP Line In DLI Pot to 0.
   - If a remote station, do the following:

     Apply a 1 kHz tone at the average voice audio level across 600 ohms to the line input. (This level is the function tone level, and is usually -10 dBm across 600 ohms, or 245 mVrms. This level MUST be 10 dBm below the "maximum system audio level" even if your actual secur-it tone and function tone are at the same level.)
   - Execute a REMOTE PTT on the System Module by flipping the REM PTT switch on the front panel.
   - Adjust the DSP Line In DLI Pot for 60% of maximum system deviation if operating with compression. *(Table 9).*

Table 9 - Deviation For Setting Line In Pot With Compression

	Deviation For Setting Line In Pot With Compression
Standard (25 Hz kHz Bandwidth	2.8 kHz
NPSPAC	2.2 kHz
Narrow (12.5 kHz Bandwidth)	1.4 kHz

   - If no compression is desired, set DLI pot to 60% of maximum system deviation *(Table 8).*
   - If compression is desired, adjust the DLI Pot for 60% of maximum system deviation *(Table 8).*
   - Increase the audio input level to the maximum system audio level. (This level is the secur-it level, and is usually 0 dBm across 600 ohms, or 775 mVrms. This level must be 10 dB higher than the average voice audio level.)
   - Adjust the Compressor Threshold CT pot for desired compression deviation level *(Table 10).*

Table 10 - Deviation For Setting Compressor Threshold Pot

	Deviation For Setting Line In Pot With Compression
Standard (25 Hz kHz Bandwidth	4.0 kHz
NPSPAC	3.2 kHz
Narrow (12.5 kHz Bandwidth)	2.0 kHz

6. Line Out
   - If not a remote station, set the Line Out LO Pot to 0.
   - If the station is a remote station, apply an "on Channel" RF signal modulated with a 1 kHz tone at 60% of system deviation to the receiver. (60% of system deviation is usually 3 kHz.)
   - Adjust the Line Out LO Pot for the desired output level as measured across 600 ohms. The line out level must never rise above 7 dBm, as measured across 600 ohms.
   - Re-enable Channel Guard decode.

7. DSP cancellation
   - If the station is a 4 wire station, set the DSP Line Cancellation DC Pot to 0. If the station is 2 wire, do the following:
   - Apply a RF signal to the receiver modulated by a 1000 Hz tone at 60% of rated system deviation and monitor the remote's Line Out. The level of the Line Out should be between +7 dBm and -19 dBm.
   - Put the System module on an extender card and meter TP1 on the DSP board. On stations with Group 6 or later T/R shelf, the TPI signal can be observed at J5-28A on the backplane. An oscilloscope may be more helpful than an analog meter. Adjust the DSP Cancellation DC Pot for a null at TP1.

8. Tone Remote timing

   You must have PC Programmer for base stations, version 9.0 or later, to affect the timing of Tone Remote Decoding.

   If you have two wire tone remote, do the following:
   - In the timing screen of the option screen, ENABLE Timed Tone Remote. The default values of 100ms and 150ms will appear for Secur-it minimum time and Secur-it maximum time. Change these values as your system requires.

AUDIO ROUTING AND ADJUSTMENTS

Once the T/R Shelf is installed and programmed properly, audio level adjustments may be made for proper system operation. Level adjustments must be made with a handset (LBI-38599). THERE ARE NO MANUAL MECHANICAL ADJUSTMENTS IN THE T/R SHELF.

Integrated circuits (IC's) U35 and U36 on the System Board are dual electronic potentiometers that are controlled by the microprocessor. IC U15 on the DSP Board is also a dual electronic potentiometer controlled by the DSP.

TX AUDIO LEVEL ADJUSTMENT

U36-0 is used to set the transmitter deviation by adjusting the TX AUDIO output level. Analog switch U15 selects, which audio source is routed to the transmitter. Possible sources are LOCAL MIC, REPEAT AUDIO, DSP LINE/TX AUDIO, DSP TX AUDIO, EXTERNAL High Speed Data, LINE IN AUDIO, OPEN (used for Morse code ID), and GROUND (used for no transmission. A battery alarm tone may also be summed in with whichever source is selected with the exception of GROUND.

Normally, LOCAL MIC, REPEAT AUDIO, DSP TX AUDIO, LINE IN AUDIO, OPEN, or GROUND will be selected. The gains in the circuitry are set such that 100 mVrms in the MIC HI or 1 Vrms (3 kHz deviation) in on VOL/SQ HI (REPEAT AUDIO) will produce the same out-put level on TX AUDIO HI. The gains for Morse code ID and battery alarm are also designed to provide the proper levels without adjustments. The TX AUDIO HI output level should be adjusted with a 100 mVrms, 1 kHz signal in on MIC HI or a 1 Vrms, 1 kHz signal in on VOL/SQ HI.

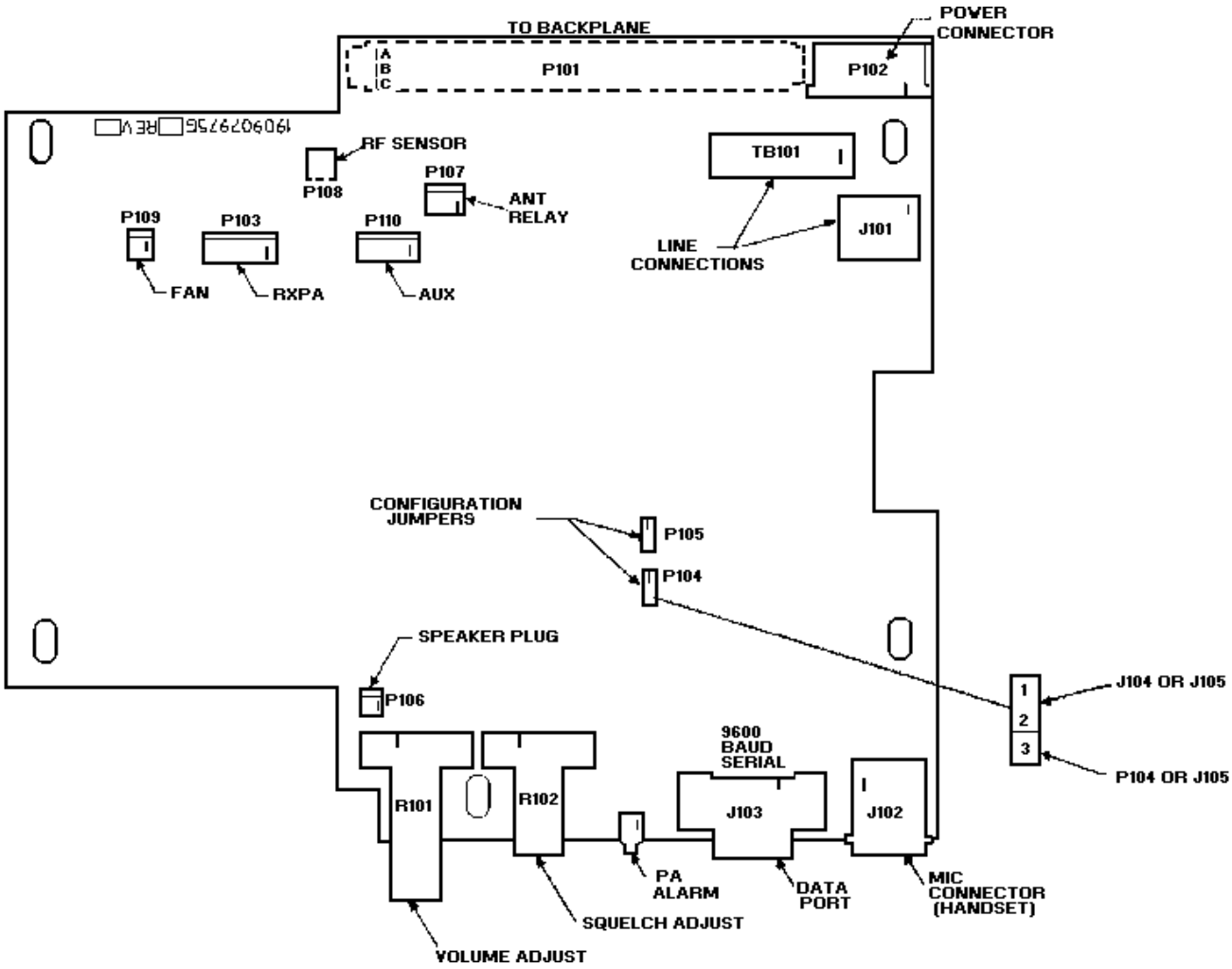

Figure 16 - T/R Shelf Interface Board

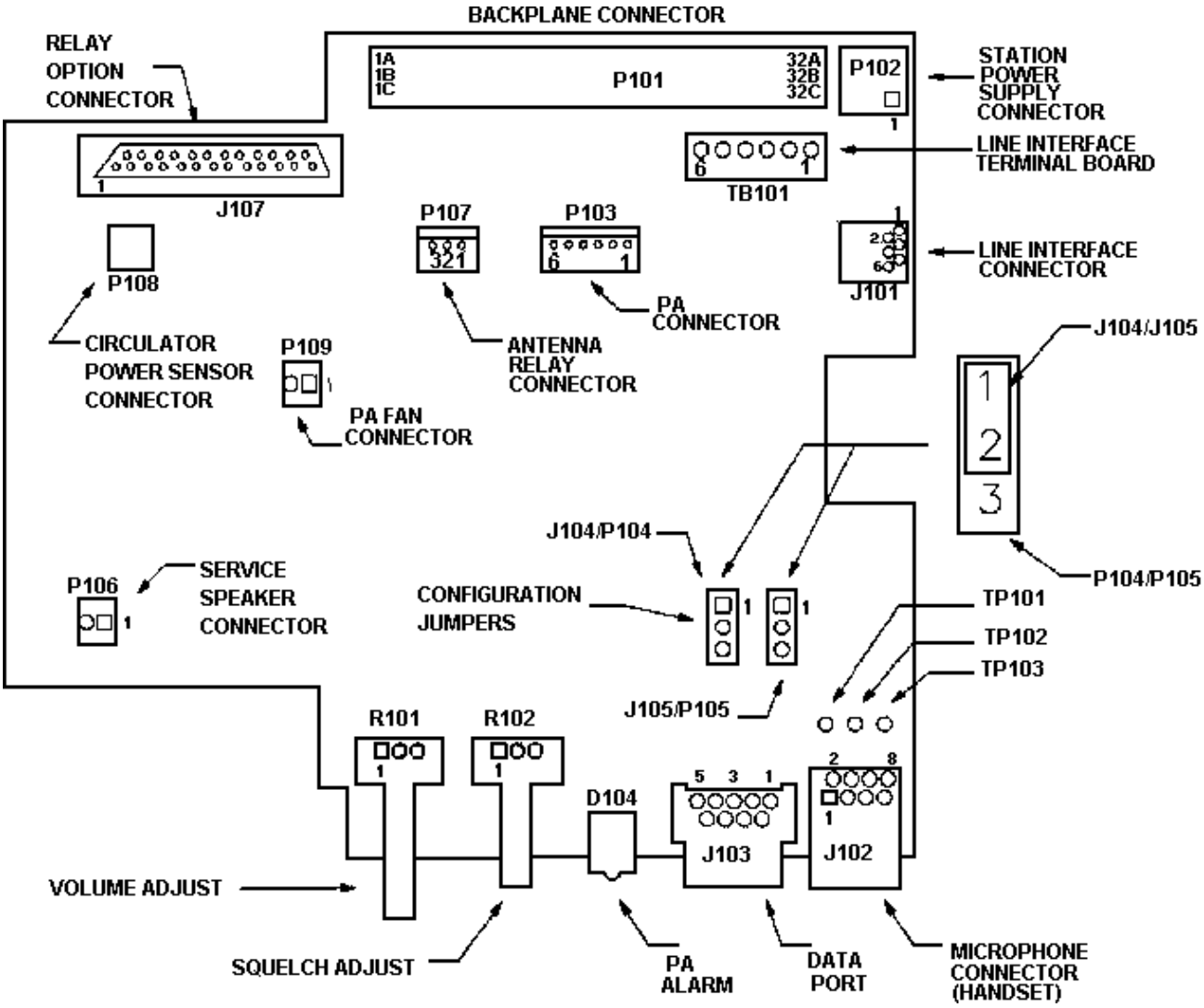

Figure 17 - T/R Shelf Interface Board (Rev. A)

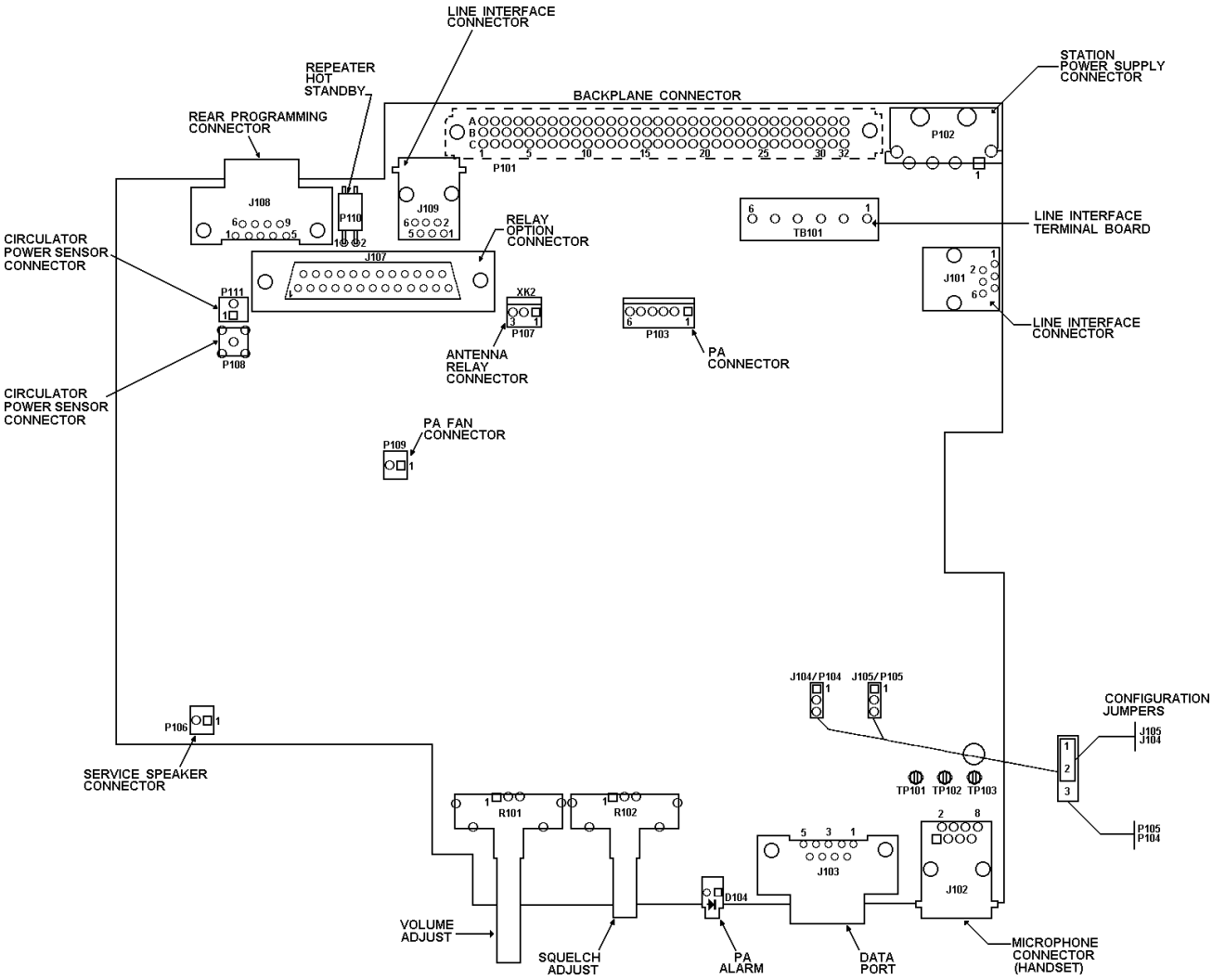

Figure 18 - T/R Shelf Interface Board (Rev. C)

REMOTE CONTROLLER TO STATION CONTROL PANEL ADJUSTMENTS

Although audio levels should be considered on a system basis, it is appropriate to set the levels of the remote controller and the control station panel by themselves with reference to the levels required by the transmission path and then connect the controller(s) and station to the path. The transmission path, if it is more than just a simple twisted pair, is usually set up with a "test tone". The "average voice" level is defined as being a certain number of decibels below the test tone. The test tone is normally the maximum level that can be sent through the path without clipping or being regulated. Although there is no definite agreement on the difference between the test tone and average voice levels, 10 dB is an appropriate level.

In order to align the RCN 1000 Remote Controller and T/R Shelf properly, it will be necessary to have some information on the transmission path. This will help to determine the levels at each end required by the system. Specifications needed include:

1. Loss at 1 kHz
2. Test tone or maximum level
3. Average voice level (if defined)
4. Loss at 2175 Hz (if tone remote)

The DSP Board performs tone detection in a tone remote installation. The "**Secur-it**" tone Decoder on this board has a dynamic range of approximately 9 dB. The system must be set up such that the "**Secur-it**" tones from all remotes in the system arrive at the T/R Shelf within this 9 dB window.

LINE OUT LEVEL ADJUSTMENT

U36-1 is used to set the line out level. Analog switch U14 selects which audio source is routed to the line. Possible sources are LOCAL MIC, VOL/SQ, auxiliary receiver audio, auxiliary receiver audio summed with VOL/SQ (simultaneous monitor), DSP LINE/TX AUDIO, MODEM LINE data, OPEN (used for battery alarm), GROUND (used for no transmission, and LINE IN audio (used for four wire loop around). A battery alarm tone and/or VG ALERT tone may also be summed in with whichever source is selected with the exception of GROUND. Typically LOCAL MIC, VOL/SQ, DSP LINE/TX AUDIO, OPEN, GROUND, or LINE IN AUDIO will be selected.

The gains in the circuitry are set such that 100 mVrms in on MIC HI or 1 Vrms (3 kHz deviation) in on VOL/SQ HI (REPEAT AUDIO) will produce the same line output level. The gains for VG ALERT tone and battery alarm are also designed to provide the proper levels without adjustments. The LINE output level should be adjusted with a 100 mVrms, 1 kHz signal in on MIC HI or a 1 Vrms, 1 kHz signal in on VOL/SQ HI.

LINE IN LEVEL ADJUSTMENT

Typically, the TX AUDIO and LINE OUT levels should be adjusted prior to adjusting the LINE IN level. DSP TX AUDIO and DSP LINE/TX AUDIO are typically line audio or VOL/SQ HI audio that has been processed by the DSP Board.

A DSP Board is always present, this DSP processed line in audio will normally be selected by analog switches U14 (DSP LINE/TX AUDIO to line out) and U15 (DSP TX AUDIO to transmit audio) on the System Module when line in audio is selected. The level for DSP TX AUDIO and DSP LINE/TX AUDIO must be adjusted on the DSP Board.

DSP LEVEL ADJUSTMENTS

The LINE IN level into the DSP must be adjusted using U15-0 (DSP line cancellation level) and U15-1 (DSP line input level) located on the DSP Board. If two-wire audio is used then both electronic pots must be adjusted. If four-wire audio is used then only U15-1 needs to be adjusted.

For two wire installations the DSP line cancellation level pot (U15-0) is used to remove what the T/R Shelf is transmitting on the line. While the T/R Shelf is transmitting received audio down the line, the line cancellation pot should be adjusted to minimize the signal level at TP1 on the DSP Board. This leaves only what is received from the remote. This signal is then level adjusted using the DSP line input level adjust pot (U15-1) and input into the DSP.

NOTE

System modules 19D902590G2, G3, & G4 must have their cover removed to gain access to TP1 on the DSP board. Modules G6 & G7 have TP1 extended to the board edge connector and may be metered on the MASTR III backplane at J5, Pin 28A.

If four wire audio is used the DSP line cancellation pot must be set to zero.

The DSP also performs a compressor function on its line input. The threshold for this compressor must be adjusted as well. The line level should be adjusted on the DSP Board prior to setting the compressor threshold.

REPEATER PANEL INSTALLATION

CSI Model 32 Repeater Panel

Use the following information in Table 11 to configure the MASTR III base station when installing the CSI-32 Repeater Panel.

1. Cut the PWB pattern at JP-1 on the T/R Shelf's backplane 19D902948.
2. Make the following connections between the base station and the repeater panel. Connectors P2, P3, and P5 are located on the backplane. Connection to the repeater panel is made at J3, the rear panel DB9 subminiature "**D**" type connector.

> **NOTE**
>
> Special Conditions for MUX and Carrier:
>
> 1. Add a pad of approximately 15 dB in the connection between the **RCN** output and the **MUX** input. It is common for the **MUX** input to have a test tone level of -16 dB and an average voice level of -29 dB.
> 2. Add a pad of approximately 15 dB in the connection between the Station Control panel output and the **MUX** input.

3. Program the base station using the standard PC programming software. For proper operation, the station firmware must be 344A3307G12 (Group 12) or higher (MASTR III System Board - U4).

   Program the following parameters:
   a. Repeater (Single Channel only)
   b. Repeater Panel (Community Repeater) option
   c. RF Duplex
   d. No CG Encode/Decode
   e. No CCT or DODT Timers
   f. Remote Programming optional
4. Set the Repeat RF Modulation and Subaudible Tone (CG) Modulation levels by adjusting the Zetron 38A Repeater Panel Audio Output and CTCSS Output potentiometers or the MASTR III station's TX Audio or CG digital potentiometers.

   Use the CG pot (CTCSS pot for CSI-32) to adjust the Subaudible Tone Modulation level and the TX AUDIO pot (Audio Output pot for CSI-32) to adjust the Normal Speech Modulation.

> **NOTE**
>
> It may be necessary to decrease the value of R5 (or short across) on the CSI Repeater Panel to obtain the desired Subaudible Tone Modulation level.

Zetron 38A Repeater Panel

Use the following information in Table 12 to configure the MASTR III base station when installing the Zetron 38A Repeater Panel.

1. Cut the PWB pattern at JP-1 on the T/R Shelf's backplane 19D902948.
2. Make the following connections between the base station and the repeater panel. Connectors P2, P3, and P5 are located on the backplane. Connection to the repeater panel is made at the 15 pin connector on the rear panel.
3. Program the base station using the standard PC programming software. For proper operation, the station firmware must be 344A3307G12 (Group 12) or higher (MASTR III System Board - U4).

   Program the following parameters:
   a. Repeater (Single Channel only)
   b. Repeater Panel (Community Repeater) option
   c. RF Duplex
   d. No CG Encode/Decode
   e. No CCT or DODT Timers
   f. Remote Programming option
4. Set the Repeat RF Modulation and Subaudible Tone (CG) Modulation levels by adjusting the Zetron 38A Repeater Panel Audio Output and CTCSS Output potentiometers or the MASTR III station's TX Audio or CG digital potentiometers.

   Use the CG pot (CTCSS pot for Zetron 38A) to adjust the Subaudible Tone Modulation level and the TX AUDIO pot (Audio Output pot for Zetron 38A) to adjust the Normal Speech Modulation.

Table 11 - CSI-32 Repeater Panel Connections

CSI-32 J3	SIGNAL NAME FUNCTION	MASTR III CONNECTION
Pin 1	A+/(DC Power)	P5.1
Pin 2	SYS_VOL \SQ_HI/Repeat Audio)	P5.8
Pin 3	RCVR_VOL\SQ_HI/ (Demodulated Audio)	P2.5
Pin 4	N/C	
Pin 5	REPEAT_PTT_IN	P2.13
Pin 6	CAS/(Carrier Activated Squelch)	P3.5
Pins 7& 8	DGND/(Power Ground)	P2.2
Pin 9	EXT_LSD/(CTCSS Encode)	P3.14

Table 12 - Zetron 38A Repeater Panel Connections

Zetron 38A	SIGNAL NAME FUNCTION	MASTR III CONNECTION
Pin 1	A+/(DC Power)	P5.1
Pin 2	N/C	
Pins 3&4	DGND/(Power ground)	P2.2
Pins 5&6	N/C	
Pin 7	REPEAT_PTT_IN	P2.13
Pins 8&9	N/C	
Pin 10	CAS/(Carrier Activated Squelch)	P3.5
Pin 11	SYS_VOL\SQ_HI/(Repeat Audio)	P5.8
Pin 12	N/C	
Pin 13	EXT_LSD/(CTCSS Encode)	P3.14
Pin 15	RCVR_VOL\SQ_HI/(Demodulated Audio)	P2.5

ACCESSORIES

The following accessories for the MASTR III Station may be obtained from your local dealer or by calling M/A-COM After Market Services 24- hour Toll Free Number **1-800-368-3277** (**USA only**) or **FAX 1-800-833-7592**. Please provide the description and part number or package number when ordering.

Service Microphone.....SXMC3B
Utility Handset..... SPK9024
Antenna Switch.....19B235897P1
RF Extender Card 19D903197G2
System Module Extender Card.....19D903197G1
U-link (BNC-to-BNC Coax Link) 344A3052P1
PC Programming TQ-3353
Programming Cable (DB9M-DB9F) TQ-3356
RF Module Test Fixture.....TQ-0650
Charger (120 Volt, 60 Hz).....344A3168P1
Charger (230 Volt, 50 Hz).....344A3168P2
Battery Backup, Gell Cell Tray 19D903719P1
Battery Backup, Gell Cell Tray Front Panel.....19C852193P1
Rack Mount Duplexer (150-162 MHz) 344A3371P1
Rack Mount Duplexer (162-174 MHz) 344A3371P2
Rack Mount Duplexer (440-470 MHz) 344A4047P1

This Page Intentionally Blank

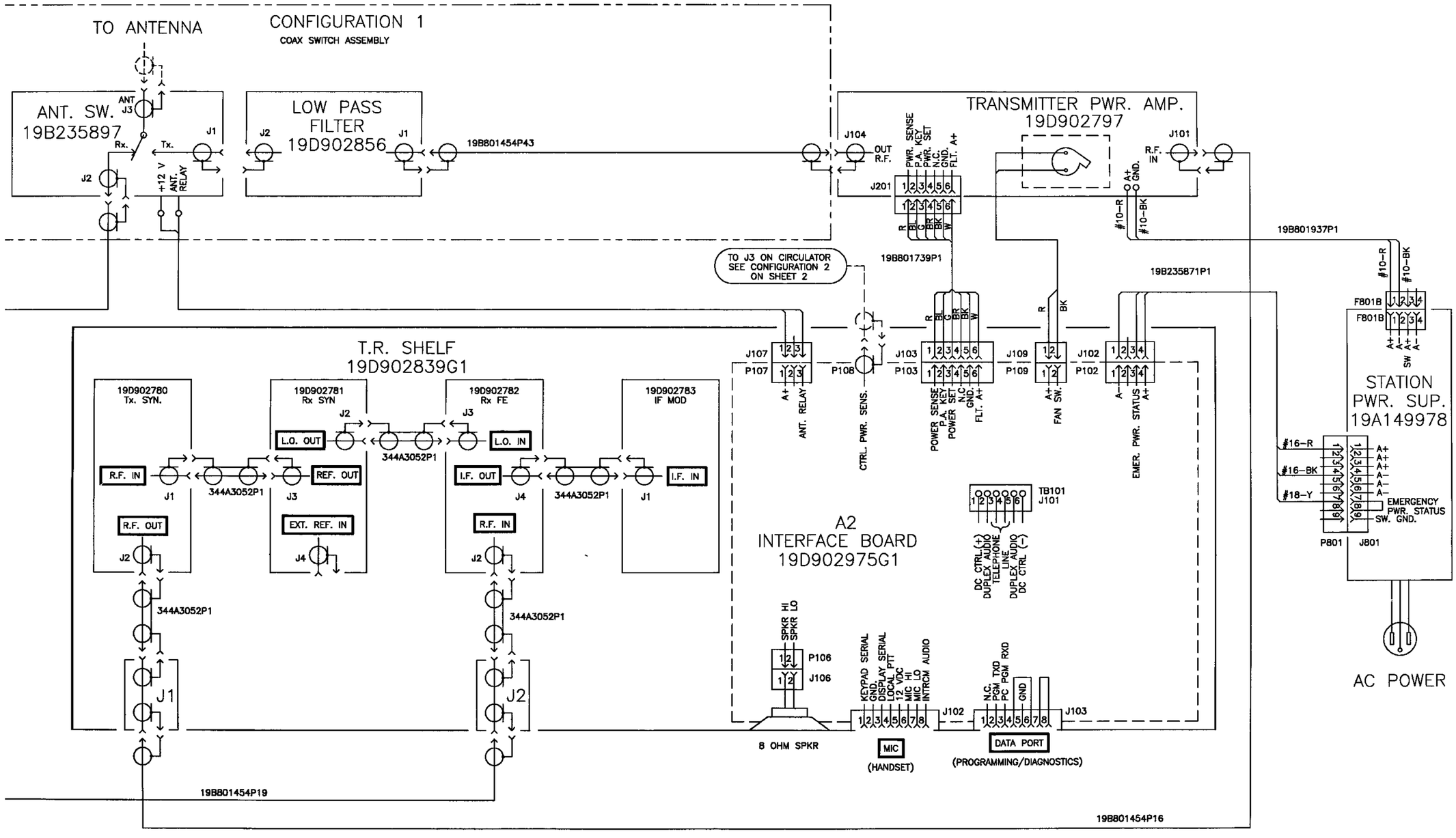

MASTR III STATION

T/R SHELF INTERCONNECT

(19D903635, Sh. 1, Rev. 4A)

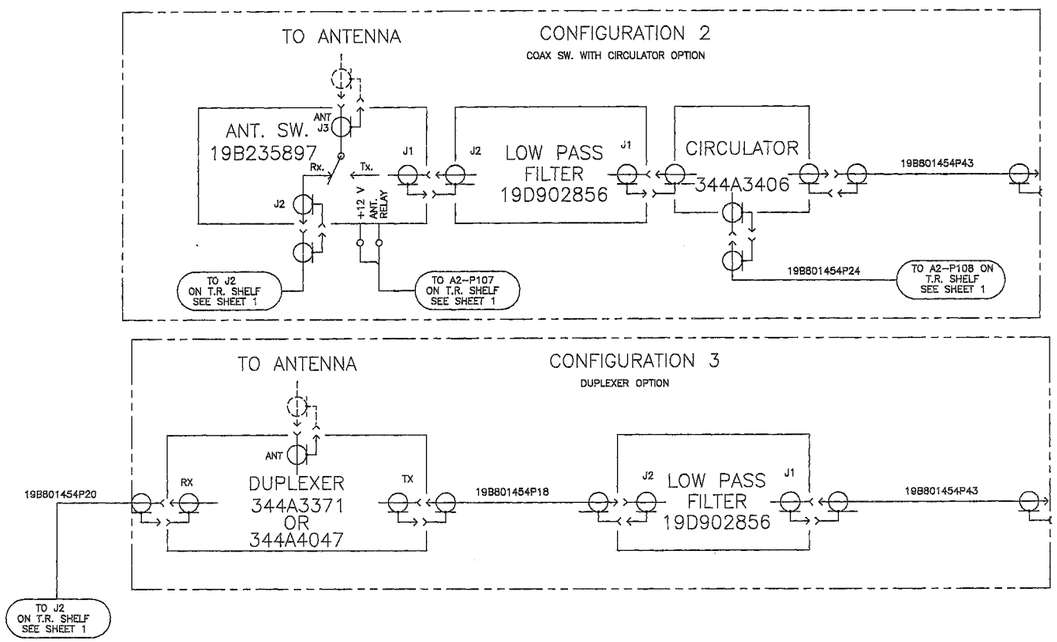

MASTR III STATION
ANTENNA CONFIGURATION INTERCONNECT

(19D903635, Sh. 2, Rev. 6)

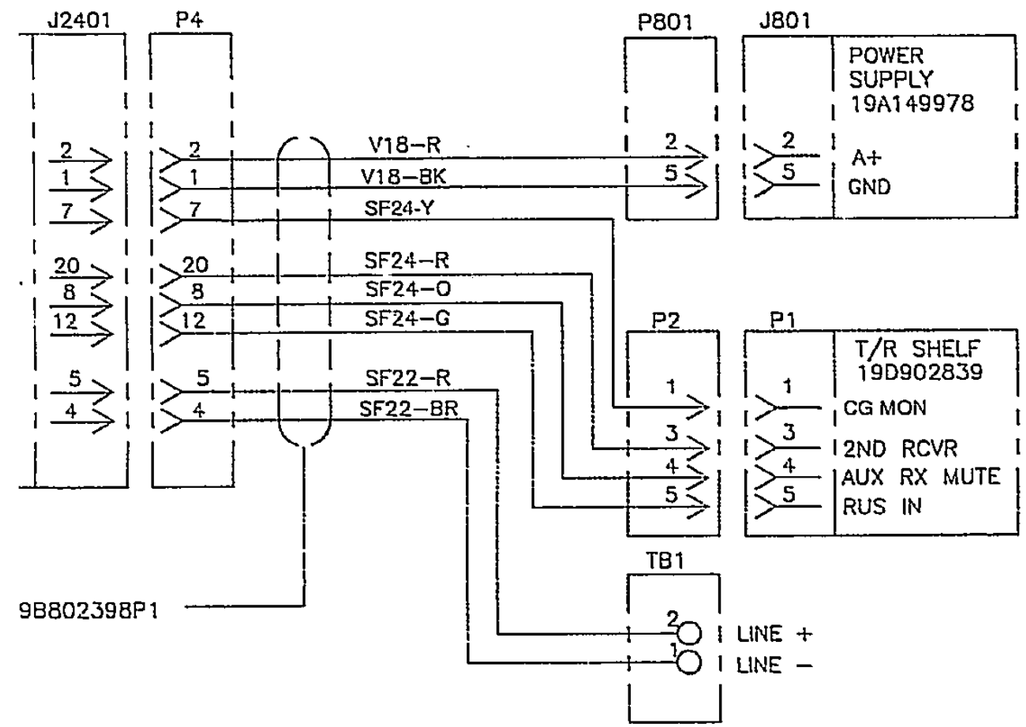

MASTR III STATION
AUXILIARY RECEIVER INTERCONNECT

(19B802439, Rev. 1)

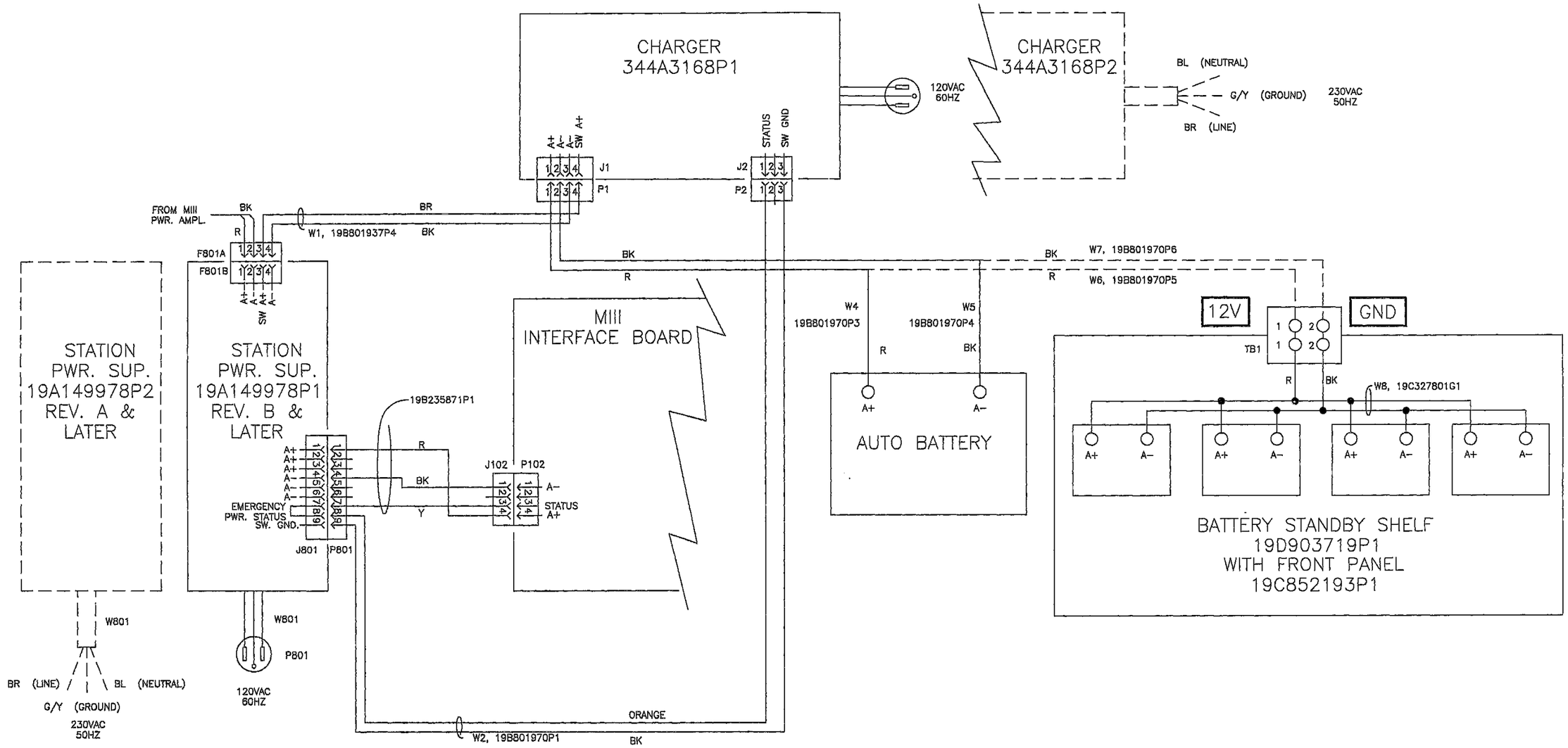

MASTR III STATION

EMERGENCY POWER INTERCONNECT

(19D903635, Sh. 3, Rev. 2)

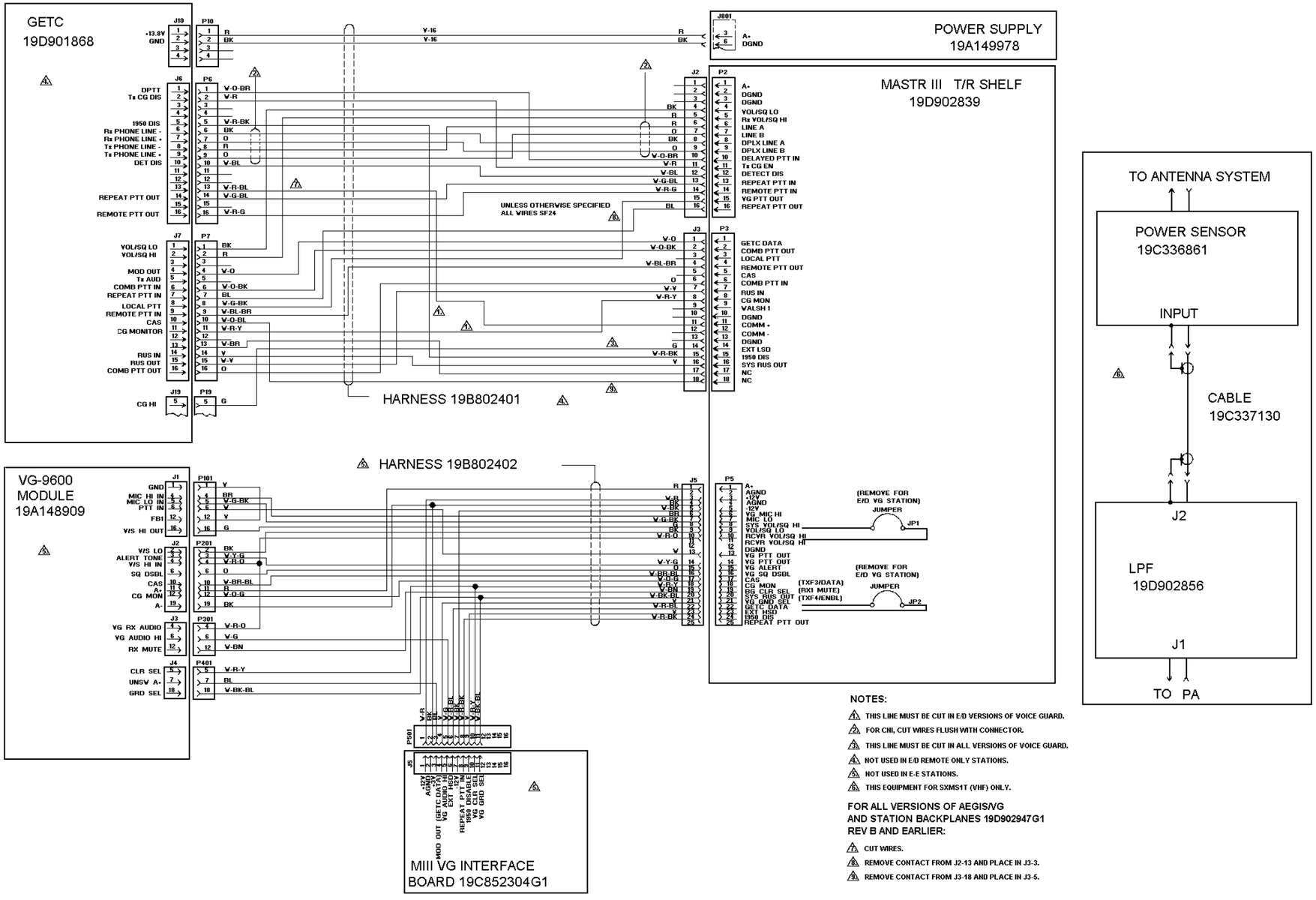

MASTR III STATION

GETC/VG INTERCONNECT

(19D904268, Rev. 4)

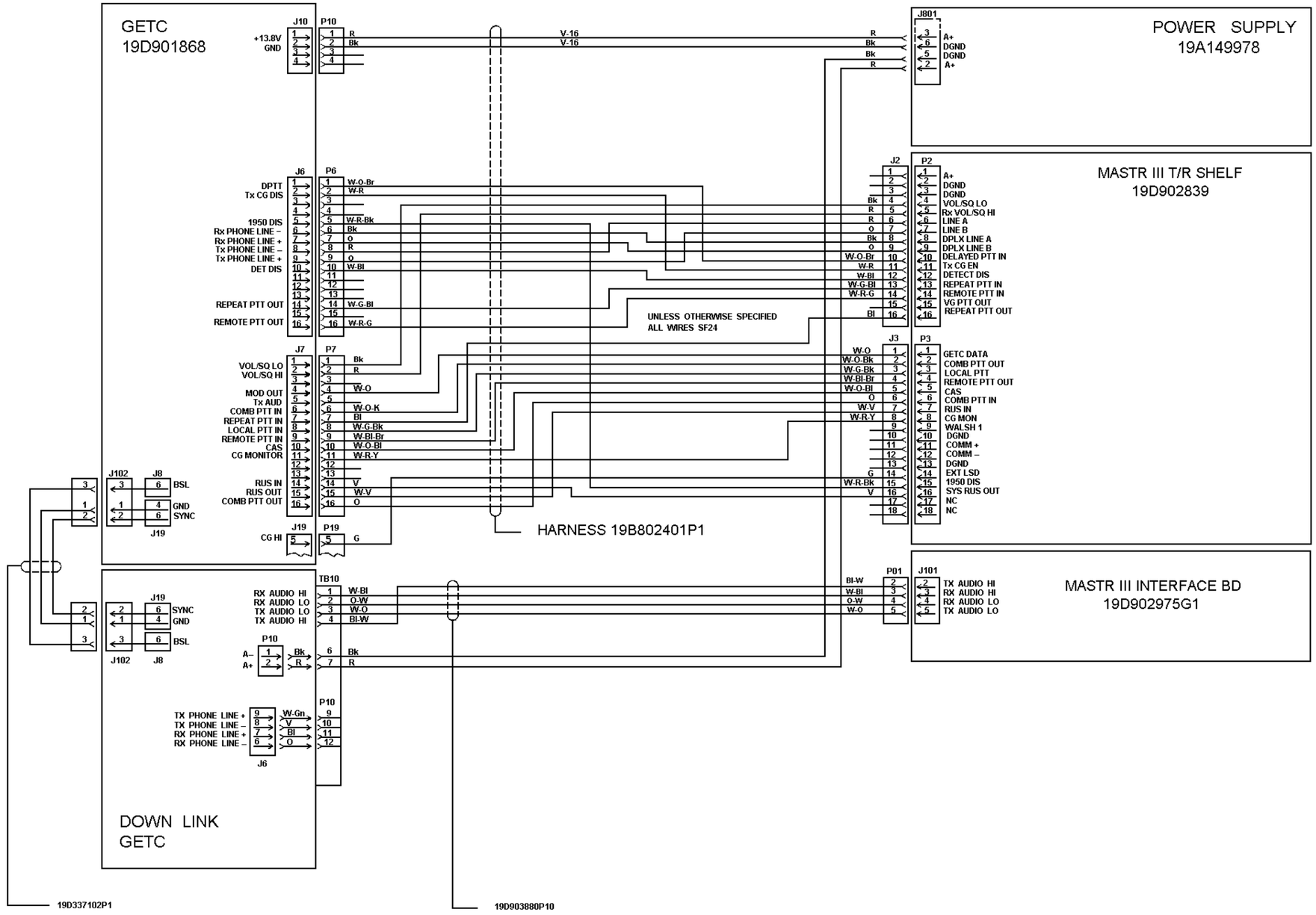

MASTR III STATION

SCAT

(188D5683, Rev. 2)

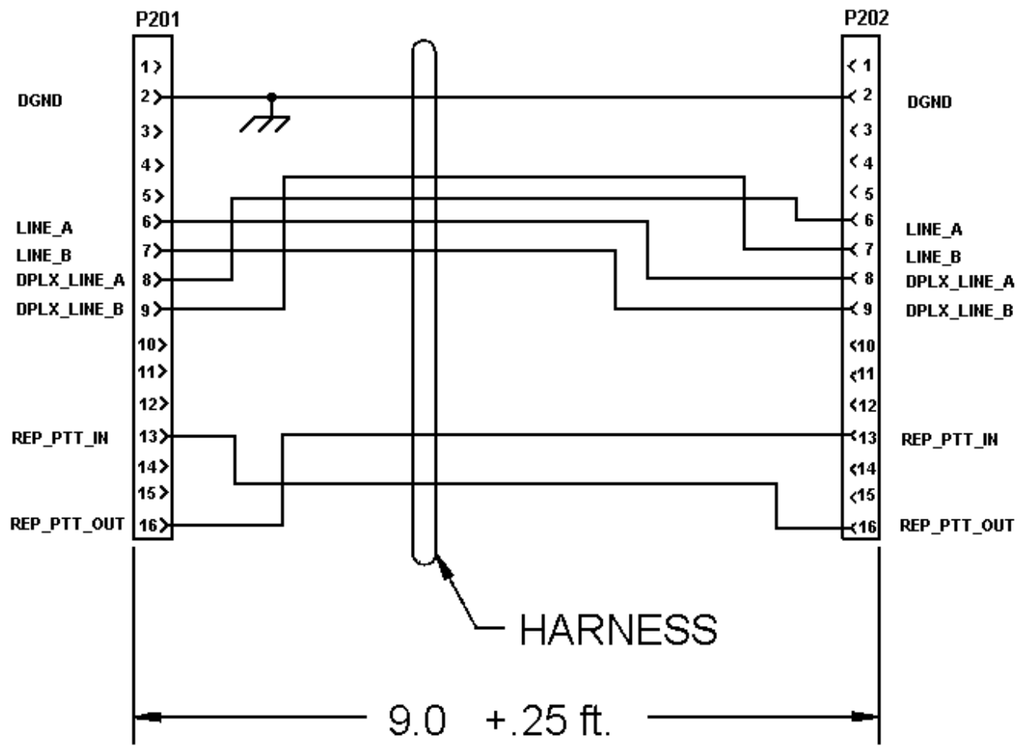

P201 & P202	WIRE DESCRIPTION
HOUSING EGE PART NO. 19A700041P42 SIMILAR TO MOLEX CAT. NO. 22-01-2165 CONTACT : (14)#24 EGE PART NO. 19A704779P26, SIMILAR TO MOLEX CAT. NO. 08-55-0101 OR EQUIVALENTS	BELDEN 9537 JACKETED CABLE 7 CONDUCTOR 24 AWG OR EQUIVALENT

MASTR III STATION

BACK-TO-BACK REPEATER HARNESS

(19B803976, Rev. 1)

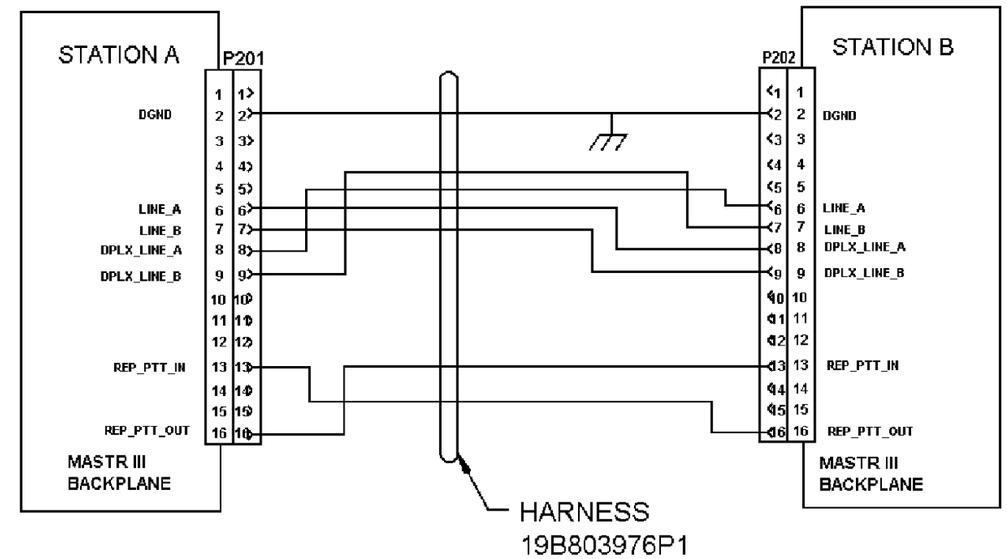

MASTR III STATION

BACK-TO-BACK REPEATER

(19B804016, Rev. 1)

(Intentionally Left Blank)

M/A-COM Wireless Systems
3315 Old Forest Road
Lynchburg, Virginia 24501
(Outside USA, 434-385-2400)
Toll Free 800-528-7711
www.macom-wireless.com

Printed in U.S.A.