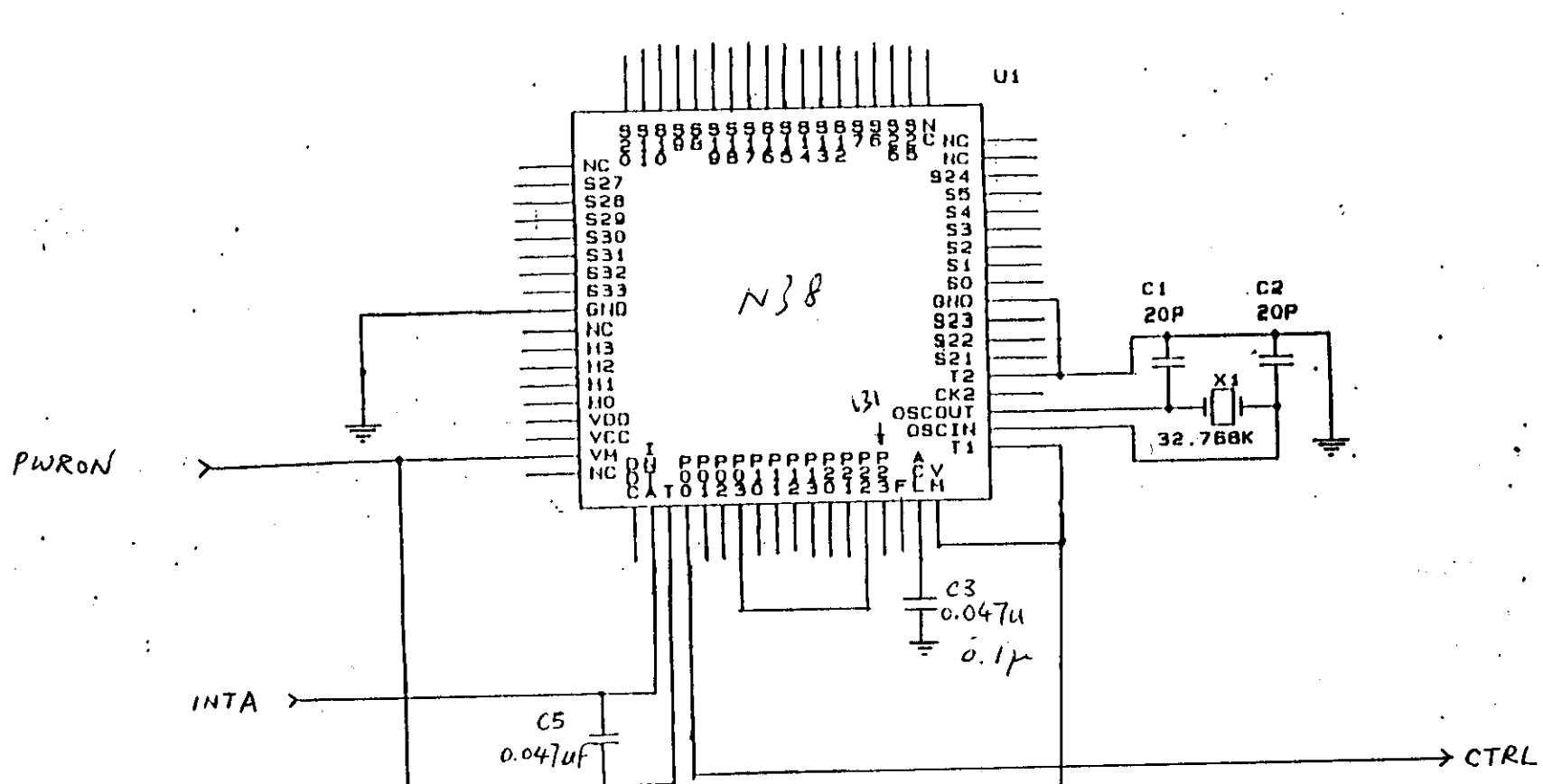

Title	Wireless Pulse Computer TX (TRANSMITTER)
Size A	Document Number
Date:	100, Sheet 1 of 2

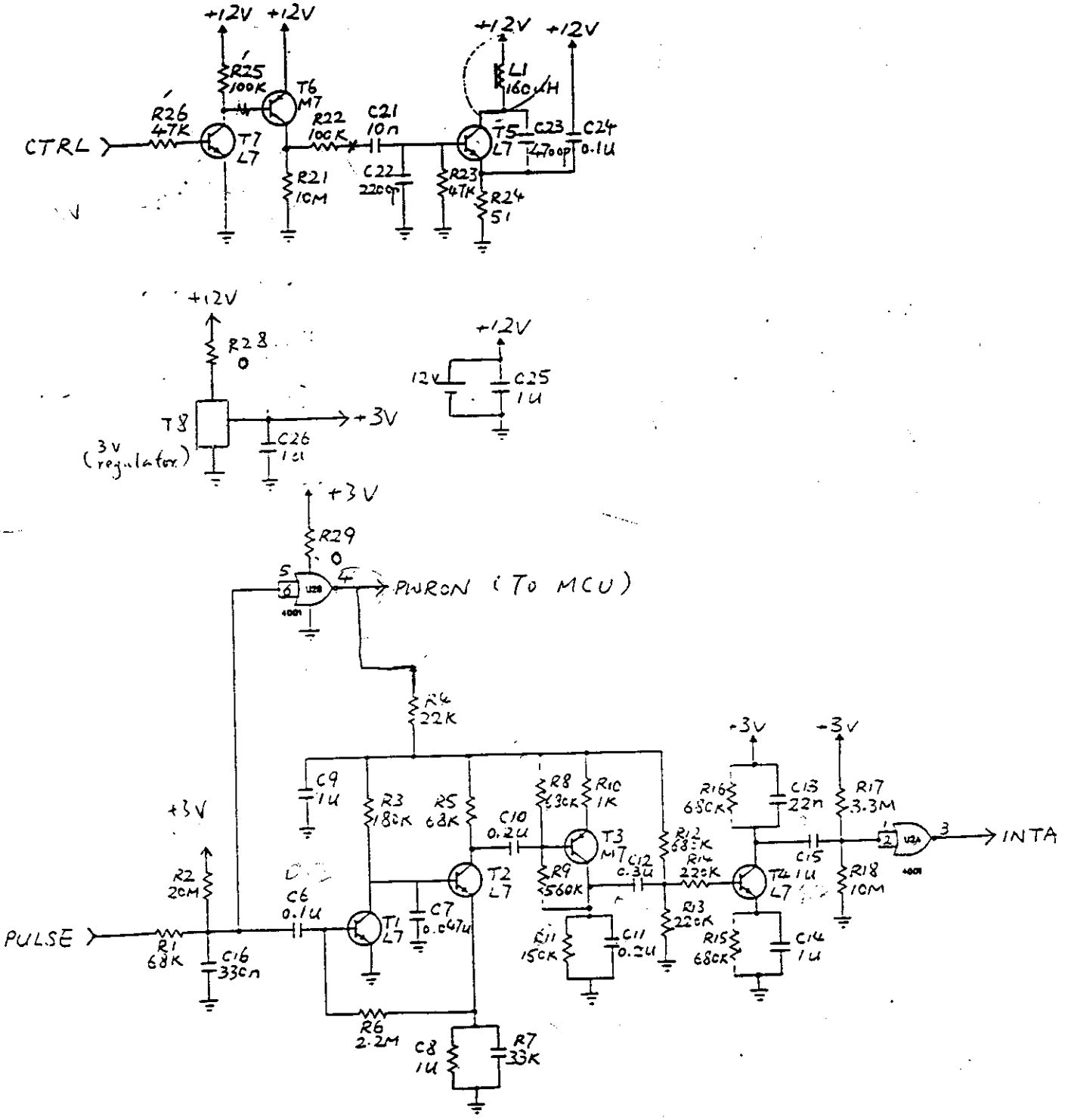

Wireless Pulse Computer

(TX)