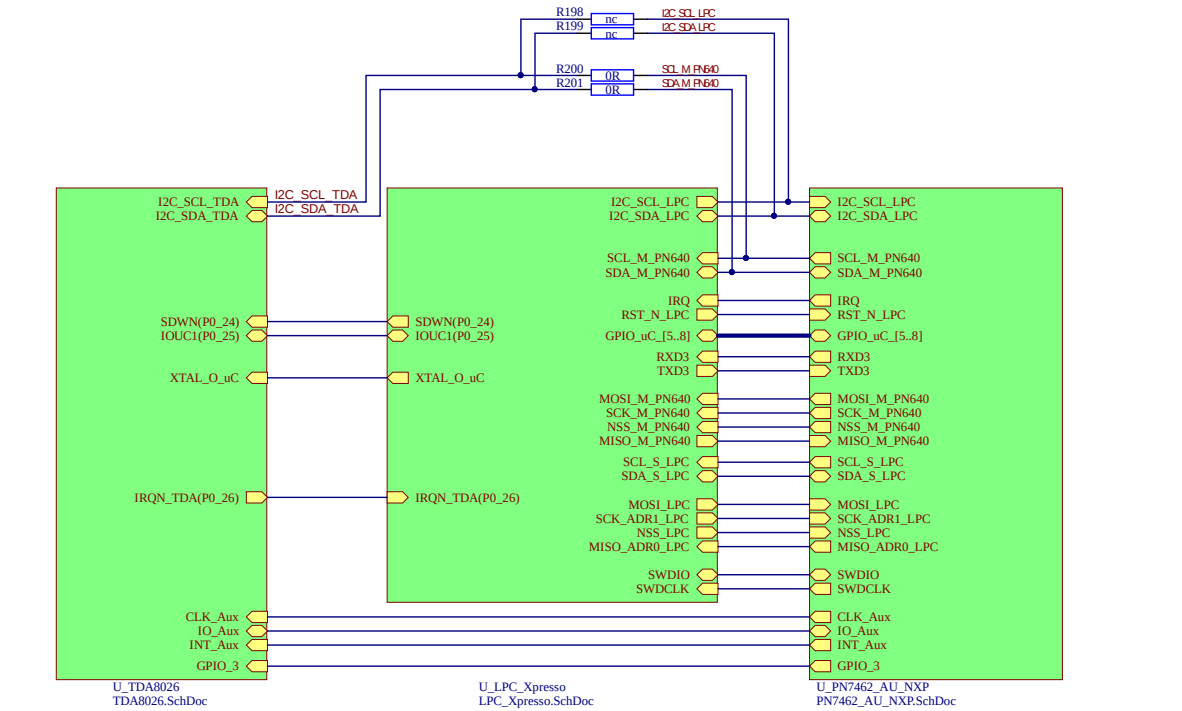

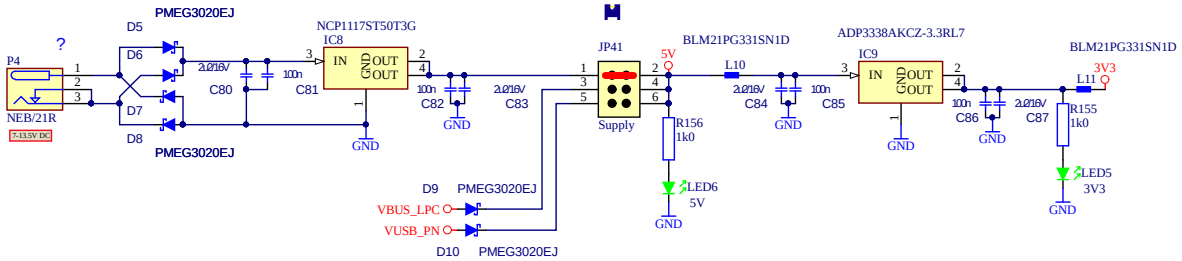

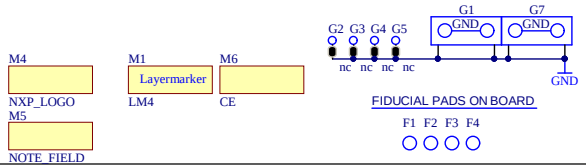

PN7462AU EVAL Board

TOP

NXP Semiconductors Hamburg

LID	2131
Version	2.2
Revision	B
Designer	R.R.
Sheet A3	1 of 5
Date	9. 06. 2016
Time	12:30:41

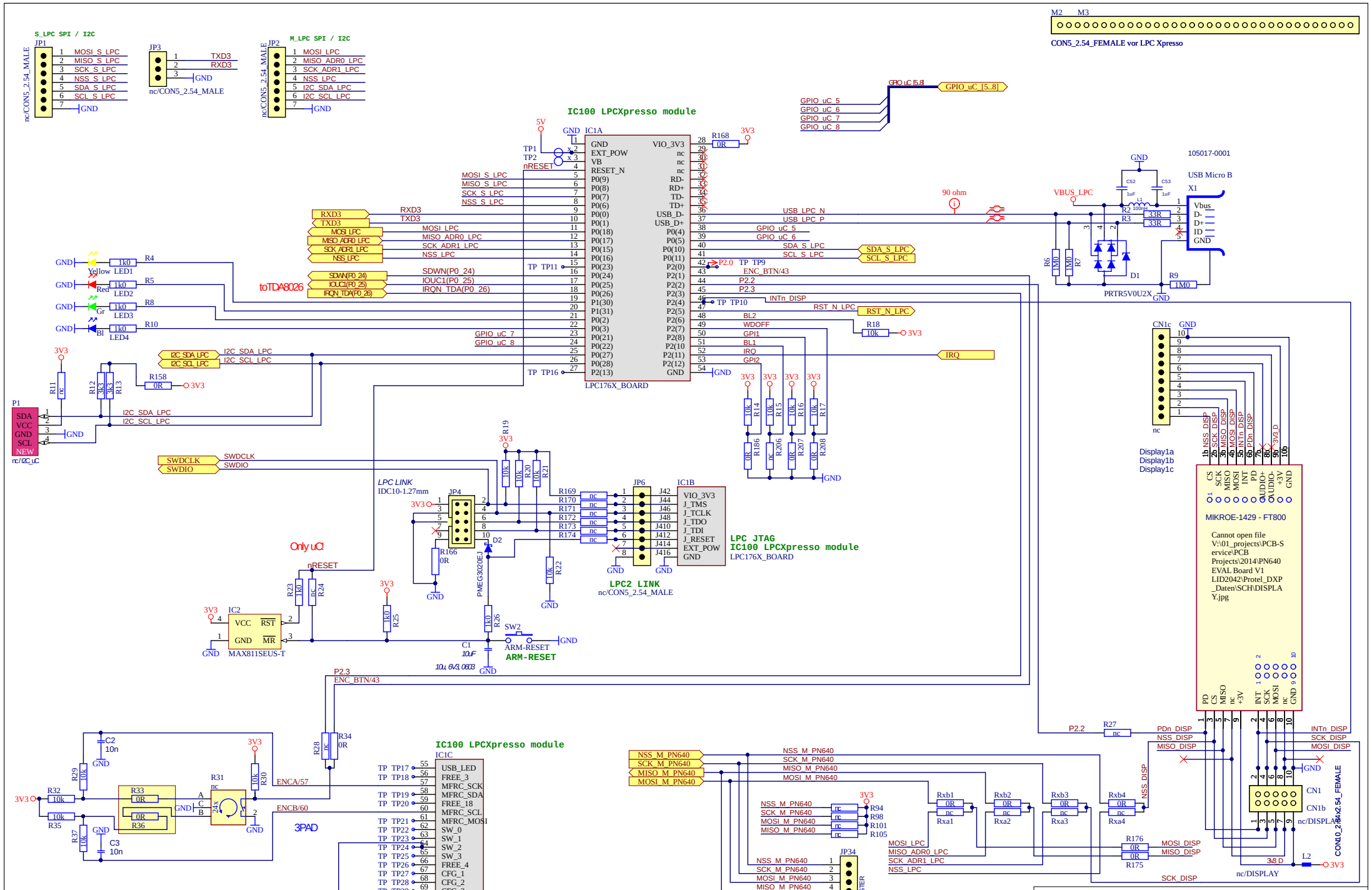
S_LPC SPI / I2C
M_LPC SPI / I2C
CON5_2.54_FEMALE vor LPC Xpresso
IC100 LPCXpresso module
LPC176X_BOARD
toTDA8026
105017-0001
USB Micro B
PRTR5V0U2X
LPC LINK
IDC10-1.27mm
Only uC!
LPC JTAG
IC100 LPCXpresso module
LPC2 LINK
nc/CON5_2.54_MALE
MAX811SEUS-T
ARM-RESET
MIKROE-1429 - FT800
Cannot open file V:\01_projects\PCB-Service\PCB Projects\2014\PN640 EVAL Board V1 LID2042\Protel_DXP_Daten\SCH\DISPLAY.jpg
3PAD
To TDA
PN7462AU EVAL Board
LPC 1769
NXP Semiconductors Hamburg
LID 2131
Version 2.2
Revision B
Designer R.R.
Sheet A3 2 of 5
Date 9. 06. 2016
Time 12:30:41

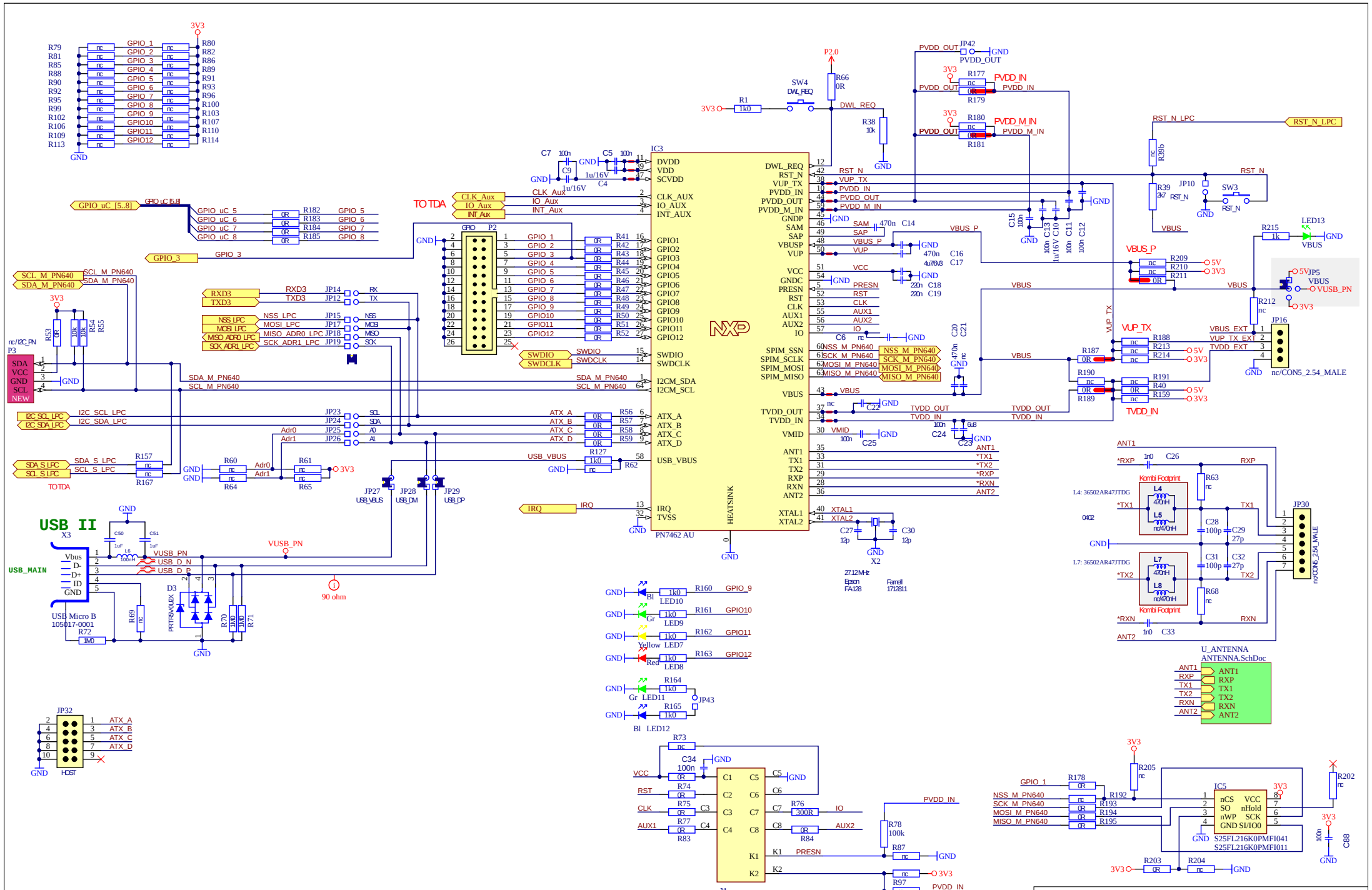
IC3
PN7462 AU
HEATSINK
DVDD
VDD
SCVDD
CLK_AUX
IO_AUX
INT_AUX
GPIO1
GPIO2
GPIO3
GPIO4
GPIO5
GPIO6
GPIO7
GPIO8
GPIO9
GPIO10
GPIO11
GPIO12
SWDIO
SWDCLK
I2CM_SDA
I2CM_SCL
ATX_A
ATX_B
ATX_C
ATX_D
USB_VBUS
IRQ
TVSS
DWL_REQ
RST_N
VUP_TX
PVDD_IN
PVDD_OUT
PVDD_M_IN
GNDP
SAM
SAP
VBUSP
VUP
VCC
GNDC
PRESN
RST
CLK
AUX1
AUX2
IO
SPIM_SSN
SPIM_SCLK
SPIM_MOSI
SPIM_MISO
VBUS
TVDD_OUT
TVDD_IN
VMID
ANT1
TX1
TX2
RXP
RXN
ANT2
XTAL1
XTAL2
USB II
X3
USB_MAIN
USB Micro B
105017-0001
VUSB_PN
USB_D_N
USB_D_P
90 ohm
JP32
HOST
TO TDA
GPIO_uC_[5..8]
GPIO_3
SCL_M_PN640
SDA_M_PN640
RXD3
TXD3
NSS_LPC
MOSI_LPC
MISO_ADR0_LPC
SCK_ADR1_LPC
I2C_SCL_LPC
I2C_SDA_LPC
SDA_S_LPC
SCL_S_LPC
nc/I2C_PN
P3
SDA
VCC
GND
SCL
NEW
JP27
USB_VBUS
JP28
USB_DM
JP29
USB_DP
LED10
LED9
Yellow LED7
Red LED8
Gr LED11
Bl LED12
JP43
J1
SMART CARD 5145300-2
571-5145300-2
Mouser
IC5
S25FL216K0PMFI041
S25FL216K0PMFI011
U_ANTENNA
ANTENNA.SchDoc
JP30
nc/CON5_254_MALE
JP16
nc/CON5_2.54_MALE
JP5
VBUS
VUSB_PN
LED13
RST_N_LPC
PN7462AU EVAL Board
PN7462 AU
NXP Semiconductors Hamburg
LID 2131
Version 2.2
Revision B
Designer R.R.
Sheet A3 3 of 5
Date 9. 06. 2016
Time 12:30:42

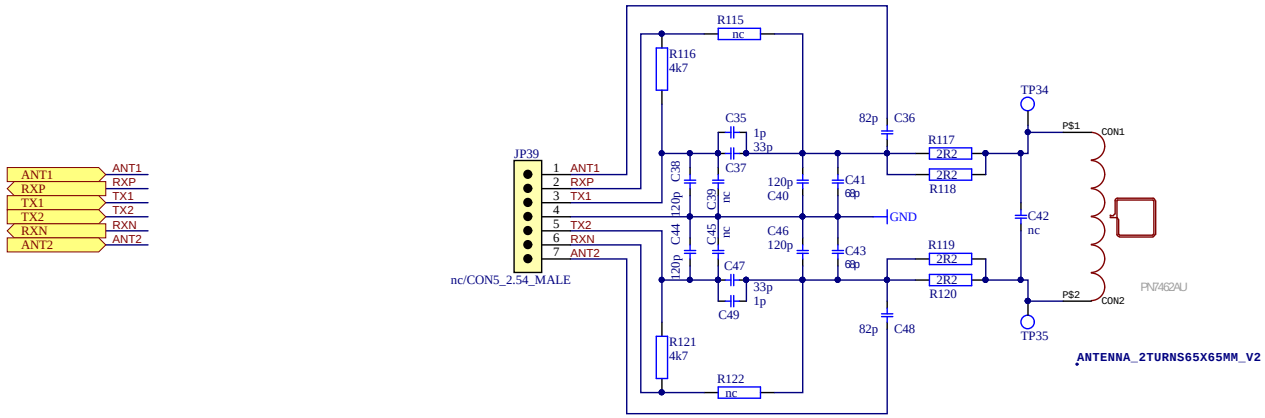

PN7462AU EVAL Board		LID	2131
Antenna		Version	2.2
NXP Semiconductors Hamburg		Revision	B
		Designer	R.R.
		Sheet A3	4 of 5
		Date	9. 06. 2016
		Time	12:30:42

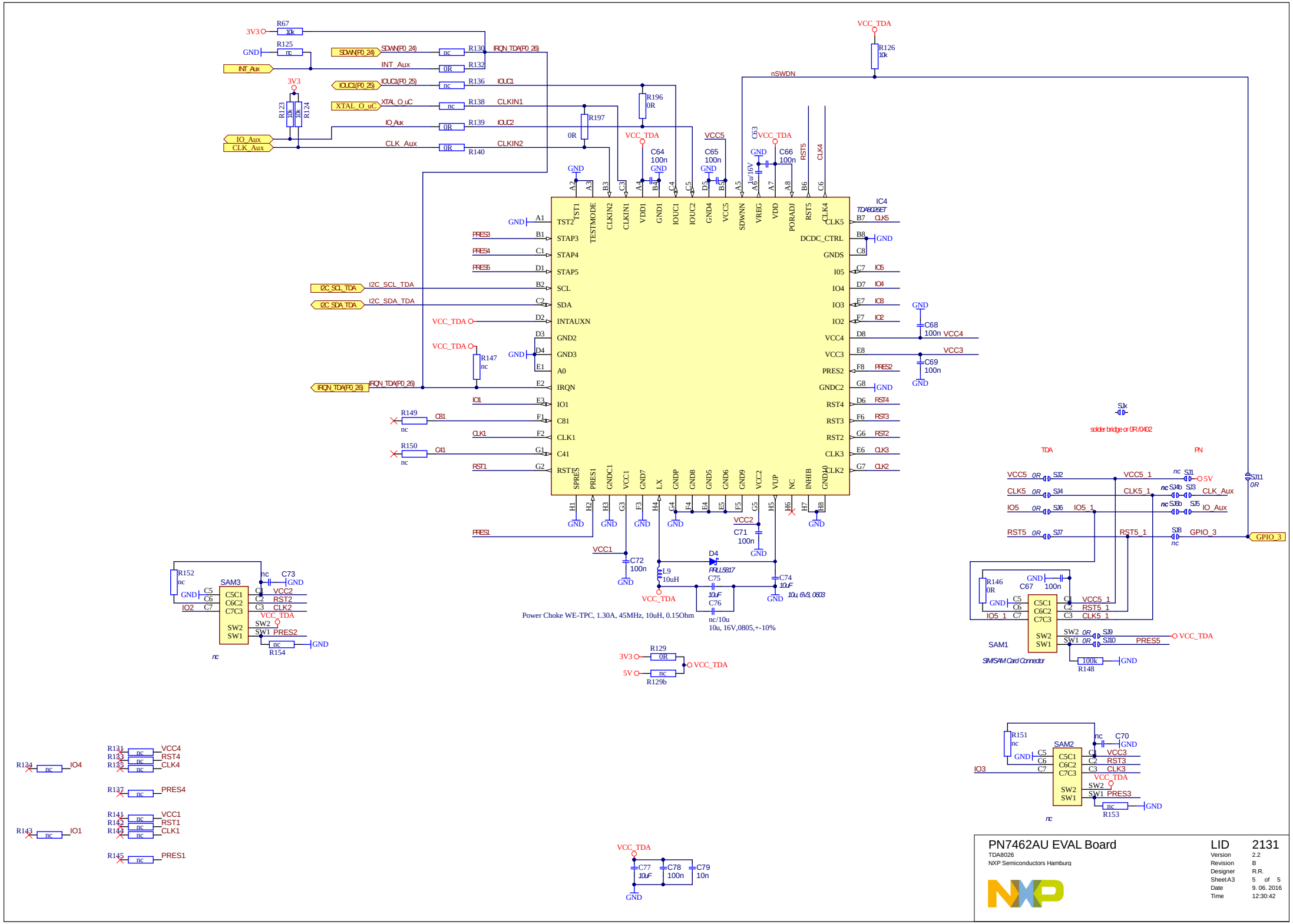
IC4
TDA8026ET
Power Choke WE-TPC, 1.30A, 45MHz, 10uH, 0.15Ohm
solder bridge or 0R/0402
TDA
PN
SAM1
SIM/SAM Card Connector
SAM2
SAM3
PN7462AU EVAL Board
TDA8026
NXP Semiconductors Hamburg
LID 2131
Version 2.2
Revision B
Designer R.R.
Sheet A3 5 of 5
Date 9. 06. 2016
Time 12:30:42