Company: Silver Spring Networks

Test of: NIC 510
To: FCC 15.247 RSS 247 (DTS)

Report No.: SSNT113-U2_Master Rev B

CONDUCTED TEST REPORT

MiCOM Labs

opening wireless markets

MASTER TEST REPORT

FROM

Test of: Silver Spring Networks NIC 511-0303
to

To: FCC CFR 47 Part 15 Subpart C 15.247 & IC RSS 247 (DTS)

Test Report Serial No.: SSNT113-U2_Master Rev B

This report supersedes: NONE

This document is the Master document controlling Addendum reports as listed below. This Master document combined with the Addendums demonstrate compliance with the standard

Master Document Number	Addendum Reports
SSNT113-U2_Master	SSNT113-U2_Conducted
	SSNT113-U2_Radiated

Applicant: Silver Spring Networks
230 W Tasman Dr
San Jose, California 95134
USA

Product Function: Plug-in radio device, will communicate over 900 MHz and/or 2.4 GHz mesh network. 2.4 GHz HAN pairing with other Zigbee devices.

Issue Date: 12th August 2016

This Test Report is Issued Under the Authority of:

MiCOM Labs, Inc.
575 Boulder Court
Pleasanton California 94566
USA
Phone: +1 (925) 462-0304
Fax: +1 (925) 462-0306
www.micomlabs.com

ACCREDITED
TESTING CERT #2381.01

MiCOM Labs is an ISO 17025 Accredited Testing Laboratory

Table of Contents

1. ACCREDITATION, LISTINGS & RECOGNITION....4
1.1. TESTING ACCREDITATION....4
1.2. RECOGNITION....5
1.3. PRODUCT CERTIFICATION....6
2. DOCUMENT HISTORY....7
3. TEST RESULT CERTIFICATE....8
4. REFERENCES AND MEASUREMENT UNCERTAINTY....9
4.1. Normative References....9
4.2. Test and Uncertainty Procedure....10
5. PRODUCT DETAILS AND TEST CONFIGURATIONS....11
5.1. Technical Details....11
5.2. Scope Of Test Program....12
5.3. Equipment Model(s) and Serial Number(s)....14
5.4. Antenna Details....14
5.5. Cabling and I/O Ports....14
5.6. Test Configurations....15
5.7. Equipment Modifications....15
5.8. Deviations from the Test Standard....15
6. TEST SUMMARY....16
7. TEST EQUIPMENT CONFIGURATION(S)....17
7.1. Conducted....17
7.2. Radiated Emissions....19
8.1. AC Wireline Emission....21

This test report may be reproduced in full only. The document may only be updated by MiCOM Labs personnel. All changes will be noted in the Document History section of the report.

1. ACCREDITATION, LISTINGS & RECOGNITION

1.1. TESTING ACCREDITATION

MiCOM Labs, Inc. is an accredited Electrical testing laboratory per the international standard ISO/IEC 17025:2005. The company is accredited by the American Association for Laboratory Accreditation (A2LA) www.a2la.org test laboratory number 2381.01. MiCOM Labs test schedule is available at the following URL; http://www.a2la.org/scopepdf/2381-01.pdf

Accredited Laboratory

A2LA has accredited

MICOM LABS

Pleasanton, CA

for technical competence in the field of

Electrical Testing

This laboratory is accredited in accordance with the recognized International Standard ISO/IEC 17025:2005 *General requirements for the competence of testing and calibration laboratories*. This accreditation demonstrates technical competence for a defined scope and the operation of a laboratory quality management system (*refer to joint ISO-ILAC-IAF Communiqué dated 8 January 2009*).

Presented this 4th day of February 2016.

Senior Director of Quality & Communications
For the Accreditation Council
Certificate Number 2381.01
Valid to November 30, 2017

For the tests or types of tests to which this accreditation applies, please refer to the laboratory's Electrical Scope of Accreditation.

1.2. RECOGNITION

MiCOM Labs, Inc has widely recognized wireless testing capabilities. Our international recognition includes Conformity Assessment Body designation by APEC MRA countries. MiCOM Labs test reports are accepted globally.

Country	Recognition Body	Status	Phase	Identification No.
USA	Federal Communications Commission (FCC)	TCB	-	US0159 Listing #: 102167
Canada	Industry Canada (IC)	FCB	APEC MRA 2	US0159 Listing #: 4143A-2 4143A-3
Japan	MIC (Ministry of Internal Affairs and Communication)	CAB	APEC MRA 2	RCB 210
	VCCI	--	--	A-0012
Europe	European Commission	NB	EU MRA	NB 2280
Australia	Australian Communications and Media Authority (ACMA)	CAB	APEC MRA 1	US0159
Hong Kong	Office of the Telecommunication Authority (OFTA)	CAB	APEC MRA 1	
Korea	Ministry of Information and Communication Radio Research Laboratory (RRL)	CAB	APEC MRA 1	
Singapore	Infocomm Development Authority (IDA)	CAB	APEC MRA 1	
Taiwan	National Communications Commission (NCC) Bureau of Standards, Metrology and Inspection (BSMI)	CAB	APEC MRA 1	
Vietnam	Ministry of Communication (MIC)	CAB	APEC MRA 1	

EU MRA – European Union Mutual Recognition Agreement.
NB – Notified Body
APEC MRA – Asia Pacific Economic Community Mutual Recognition Agreement. Recognition agreement under which test lab is accredited to regulatory standards of the APEC member countries.

Phase I - recognition for product testing
Phase II – recognition for both product testing and certification

This test report may be reproduced in full only. The document may only be updated by MiCOM Labs personnel. All changes will be noted in the Document History section of the report.

1.3. PRODUCT CERTIFICATION

MiCOM Labs, Inc. is an accredited Product Certification Body per the international standard ISO/IEC 17065:2012. The company is accredited by the American Association for Laboratory Accreditation (A2LA) www.a2la.org test laboratory number 2381.02. MiCOM Labs test schedule is available at the following URL; http://www.a2la.org/scopepdf/2381-02.pdf

Accredited Product Certification Body

A2LA has accredited

MICOM LABS

Pleasanton, CA

This product certification body is accredited in accordance with the recognized International Standard ISO/IEC 17065:2012 *Requirements for bodies certifying products, processes and services*. This accreditation demonstrates technical competence for a defined scope and the operation of a management system.

Presented this 4th day of February 2016.

Senior Director of Quality & Communications
For the Accreditation Council
Certificate Number 2381.02
Valid to November 30, 2017

For the product certification schemes to which this accreditation applies, please refer to the organization's Product Certification Scope of Accreditation.

United States of America – Telecommunication Certification Body (TCB)

Industry Canada – Certification Body, CAB Identifier – US0159

Europe – Notified Body (NB), NB Identifier - 2280

Japan – Recognized Certification Body (RCB), RCB Identifier - 210

2. DOCUMENT HISTORY

Document History		
Revision	Date	Comments
Draft	20th July 2016	

Released Document History			
Document	**Revision**	**Date**	**Comments**
Master	Rev A	9th August 2016	Initial release
Conducted Addendum	Rev A	9th August 2016	Initial release
Radiated Addendum	Rev A	9th August 2016	Initial release
Master	Rev B	12th August 2016	P 11 Table 5.1 Change to the declared nominal power.
Conducted Addendum	Rev A	9th August 2016	Initial release
Radiated Addendum	Rev A	9th August 2016	Initial release

In the above table the latest report revision will replace all earlier versions.

3. TEST RESULT CERTIFICATE

Manufacturer:	Silver Spring Networks 230 W Tasman Dr San Jose California 95134 USA	**Tested By:**	MiCOM Labs, Inc. 575 Boulder Court Pleasanton California 94566 USA
Model:	NIC 511-0303	**Telephone:**	+1 925 462 0304
Type Of Equipment:	Plug-in radio device, will communicate over 900 MHz and/or 2.4 GHz mesh network. 2.4 GHz HAN pairing with other Zigbee devices.	**Fax:**	+1 925 462 0306
S/N's:	00:13:50:07:00:00:08:81		
Test Date(s):	14th July to 1st August 2016	**Website:**	www.micomlabs.com

STANDARD(S)	TEST RESULTS
FCC CFR 47 Part 15 Subpart C 15.247 & IC RSS 247 (DTS)	**EQUIPMENT COMPLIES**

MiCOM Labs, Inc. tested the equipment mentioned in accordance with the requirements set forth in the above standards. Test results indicate that the equipment tested is capable of demonstrating compliance with the requirements as documented within this report.

Notes:

1. This document reports conditions under which testing was conducted and the results of testing performed.

2. Details of test methods used have been recorded and kept on file by the laboratory.

3. Test results apply only to the item(s) tested.

ACCREDITED
TESTING CERT #2381.01

Approved & Released for MiCOM Labs, Inc. by:

Graeme Grieve
Quality Manager MiCOM Labs, Inc.

Gordon Hurst
President & CEO MiCOM Labs, Inc.

This test report may be reproduced in full only. The document may only be updated by MiCOM Labs personnel. All changes will be noted in the Document History section of the report.

4. REFERENCES AND MEASUREMENT UNCERTAINTY

4.1. Normative References

REF.	PUBLICATION	YEAR	TITLE
I	KDB 662911 D01 & D02	Oct 31 2013	Guidance for measurement of output emission of devices that employ single transmitter with multiple outputs or systems with multiple transmitters operating simultaneously in the same frequency band
II	KDB 558074 D01 v03r05	8th April 2016	Guidance for performing compliance measurements on Digital Transmission Systems (DTS) operating under section 15.247.
III	A2LA	June 2015	R105 - Requirement's When Making Reference to A2LA Accreditation Status
IV	ANSI C63.10	2013	American National Standard for Testing Unlicensed Wireless Devices
V	ANSI C63.4	2014	American National Standards for Methods of Measurement of Radio-Noise Emissions from Low-Voltage Electrical and Electronic Equipment in the Range of 9 kHz to 40 GHz
VI	CISPR 22	2008	Information technology equipment - Radio disturbance characteristics - Limits and methods of measurement
VII	ETSI TR 100 028	2001-12	Parts 1 and 2 Electromagnetic compatibility and Radio Spectrum Matters (ERM); Uncertainties in the measurement of mobile radio equipment characteristics
VIII	FCC 47 CFR Part 15.247	2014	Radio Frequency Devices; Subpart C – Intentional Radiators
IX	ICES-003	Issue 6 Jan 2016	Spectrum Management and Telecommunications; Interference-Causing Equipment Standard. Information Technology Equipment (Including Digital Apparatus) – Limits and methods of measurement.
X	M 3003	Edition 3 Nov.2012	Expression of Uncertainty and Confidence in Measurements
XI	RSS-247 Issue 1	May 2015	Digital Transmission Systems (DTSs), Frequency Hopping System (FHSs) and Licence-Exempt Local Area Network (LE-LEN) Devices
XII	RSS-Gen Issue 4	November 2014	General Requirements and Information for the Certification of Radiocommunication Equipment
XIII	KDB 644545 D03 v01	August 14th 2014	Guidance for IEEE 802.11ac New Rules
XIV	FCC 47 CFR Part 2.1033	2014	FCC requirements and rules regarding photographs and test setup diagrams.

This test report may be reproduced in full only. The document may only be updated by MiCOM Labs personnel. All changes will be noted in the Document History section of the report.

4.2. Test and Uncertainty Procedure

Conducted and radiated emission measurements were conducted in accordance with American National Standards Institute ANSI C63.4, listed in the Normative References section of this report.

Measurement uncertainty figures are calculated in accordance with ETSI TR 100 028 Parts 1 and 2.

Measurement uncertainties stated are based on a standard uncertainty multiplied by a coverage factor k = 2, providing a level of confidence of approximately 95 % in accordance with UKAS document M 3003 listed in the Normative References section of this report.

This test report may be reproduced in full only. The document may only be updated by MiCOM Labs personnel. All changes will be noted in the Document History section of the report.

5. PRODUCT DETAILS AND TEST CONFIGURATIONS

5.1. Technical Details

Details	Description
Purpose:	Test of the Silver Spring Networks NIC511-0303 to FCC CFR 47 Part 15 Subpart C 15.247 (DTS) and Industry Canada RSS-247. Radio Frequency Devices; Subpart C – Intentional Radiators
Applicant:	Silver Spring Networks 230 W Tasman Dr San Jose California 95134 USA
Manufacturer:	As Applicant
Laboratory performing the tests:	MiCOM Labs, Inc. 575 Boulder Court Pleasanton California 94566 USA
Test report reference number:	SSNT113-U2_Master
Date EUT received:	14th July 2016
Standard(s) applied:	FCC CFR 47 Part 15 Subpart C 15.247 (DTS) & IC RSS-247
Dates of test (from - to):	14th July to 1st August 2016
No of Units Tested:	1
Type of Equipment:	Network Interface Card (NIC)
Product Family Name:	NIC 510
Model(s):	NIC 511-0303, NIC 511-0302, NIC 511-0301
Location for use:	Both
Declared Frequency Range(s):	2400 - 2483.5 MHz;
Primary function of equipment:	Plug-in radio device, will communicate over 900 MHz and/or 2.4 GHz mesh network. 2.4 GHz HAN pairing with other Zigbee devices.
Secondary function of equipment:	None Provided
Type of Modulation:	DSSS
EUT Modes of Operation:	OQPSK
Declared Nominal Output Power (Peak):	2400 - 2483.5 MHz:: +27 dBm
Transmit/Receive Operation:	Transceiver - Half Duplex
Rated Input Voltage and Current:	DC only (Battery operated / external supply) 4Vdc
Operating Temperature Range:	Declared Range -40°C to +85°C
ITU Emission Designator:	2M20F1D
Equipment Dimensions:	114.5mm x 101.6mm x 19mm
Weight:	140 grams
Hardware Rev:	173-0730-00: NIC 511-0303 173-0729-00: NIC 511-0302 173-0728-00: NIC 511-0301
Software Rev:	4.0.1

This test report may be reproduced in full only. The document may only be updated by MiCOM Labs personnel. All changes will be noted in the Document History section of the report.

5.2. Scope Of Test Program

Silver Spring Networks NIC 510-0303

The scope of the test program was to test the Silver Spring Networks NIC 511-0303, Network Interface Card (NIC) configurations in the frequency ranges 2400 - 2483.5 MHz; for compliance against the following specification:

FCC CFR 47 Part 15 Subpart C 15.247 (DTS)
Radio Frequency Devices; Subpart C – Intentional Radiators

IC RSS 247 (DTS)
Digital Transmission Systems (DTSs), Frequency Hopping Systems (FHSs) and Licence-Exempt Local Area Network (LE-LAN) Devices

The following product description was supplied by Silver Spring Networks.

NIC 510
The Silver Spring Networks (SSNI) Network Interface Card, or NIC 511, is based on SSN's 5th Generation radio platform. NIC 511 may be configured for energy meters and other devices to be used in SSN Smart Energy Networks (SEN). The NIC 511 family incorporates a 902-928MHz frequency hopping mesh radio, a 902-928 MHz DSSS radio, a 2.4GHz ISM band frequency hopping mesh radio, and a 2.4GHz DSSS radio. The NIC 511 family supports basic meter types including single-phase meters and three-phase meters.

This report is intended to cover the NIC 510 family of products which includes the NIC 511-0303 and represents a worse case configuration of the product family.

NIC 510 products include the following model numbers/configurations:

NIC 511-0303 - 900+2.4,INT/EXT ANT,HW1
NIC 511-0302 - 900+2.4,EXT ANT,HW1
NIC 511-0301 - 900+2.4,INT ANT,HW1

This test report may be reproduced in full only. The document may only be updated by MiCOM Labs personnel. All changes will be noted in the Document History section of the report.

Silver Spring Networks NIC 511-0303

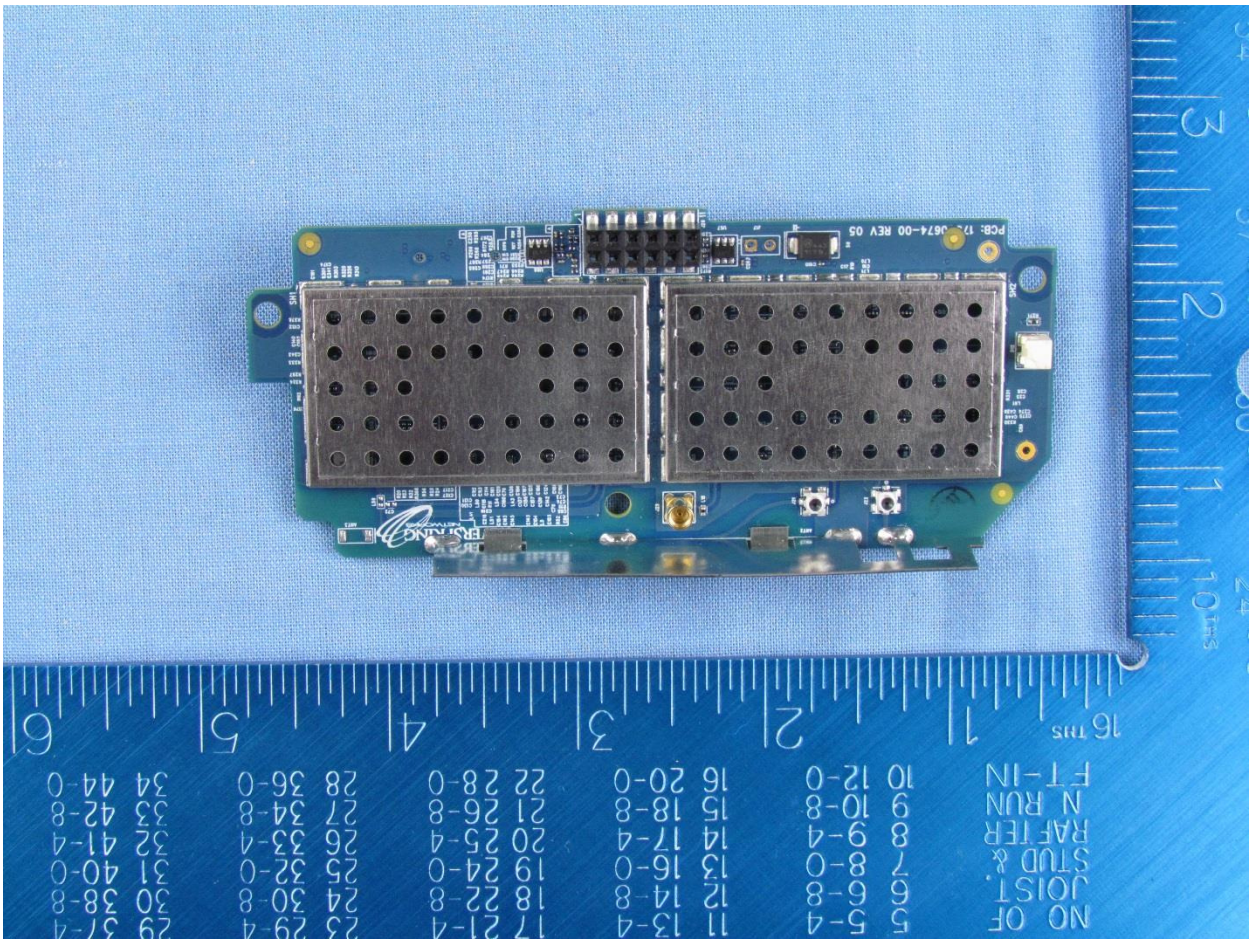

5.3. Equipment Model(s) and Serial Number(s)

Type	Description	Manufacturer	Model	Serial no.	Delivery Date
EUT	Network Interface Card (NIC)	Silver Spring Networks	NIC 511-0303	0013500700000881	--
Support Equipment	Laptop	Apple	MacBookPro	--	--

5.4. Antenna Details

Type	Manufacturer	Model	Family	Gain (dBi)	BF Gain	Dir BW	X-Pol	Frequency Band (MHz)
integral	Tai Sheng Chen	155-0010-00	F-Type	5.0	-	360	-	2400 - 2483.5
external	WP	WPANT30017-CA	OMNI	4.5	-	360	-	2400 - 2483.5
external	WP	WPANT40020-SA	Wrap Around	3.5	-	360	-	2400 - 2483.5
BF Gain - Beamforming Gain Dir BW - Directional BeamWidth X-Pol - Cross Polarization								

5.5. Cabling and I/O Ports

*None

5.6. Test Configurations

Results for the following configurations are provided in this report:

Operational Mode(s) (DSSS)	Data Rate with Highest Power kbps	Channel Frequency (MHz)		
		Low	Mid	High
2400 - 2483.5 MHz				
OQPSK	250.0	2405.0	2440.0	2480.0

5.7. Equipment Modifications

The following modifications were required to bring the equipment into compliance:
1. NONE

5.8. Deviations from the Test Standard

The following deviations from the test standard were required in order to complete the test program:
1. NONE

6. TEST SUMMARY

List of Measurements

Test Header	Result	Comments
Conducted Testing	See Report SSNT113-U2_Conducted Addendum	
15.247(a)(2) 6 dB & 99% Bandwidth	Complies	
15.247(b), 15.31(e) Conducted Output Power	Complies	
15.247(d) Conducted Emissions	Complies	
(1) Conducted Spurious Emissions	Complies	
(2) Conducted Band-Edge Emissions	Complies	
15.247(e) Power Spectral Density	Complies	
Radiated Testing	See Report SSNT113-U2_Radiated Addendum	
(b)(2) Radiated Spurious & Band-Edge Emissions	Complies	
Integral	Complies	
Digital Emissions	See Report SSNT113-U2_Radiated Addendum	
15.209 Digital Emissions	Complies	
AC Wireline Emissions	Test not applicable, EUT is dc powered	
15.207 AC Wireline Emissions	N/A	

This test report may be reproduced in full only. The document may only be updated by MiCOM Labs personnel. All changes will be noted in the Document History section of the report.

7. TEST EQUIPMENT CONFIGURATION(S)

7.1. Conducted

Conducted RF Emission Test Set-up(s)

The following tests were performed using the conducted test set-up shown in the diagram below.
1. 6 dB & 99% BANDWIDTH
2. Peak Output Power
3. Power Spectral Density
4. Conducted Spurious Emissions
5. Conducted Spurious Band-Edge Emissions

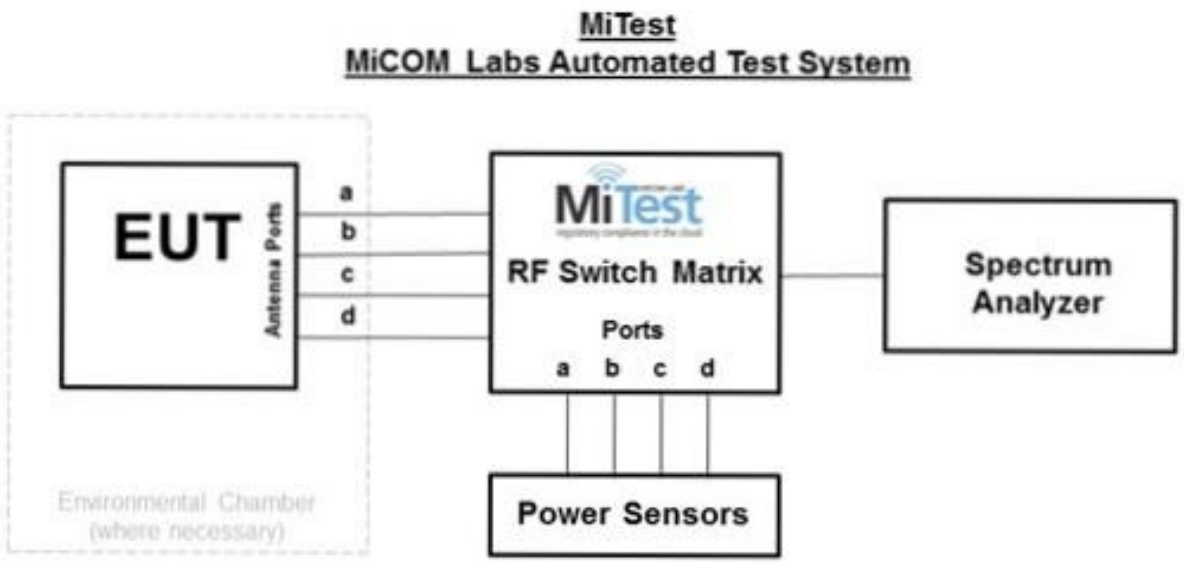

Conducted Test Measurement Setup

A full system calibration was performed on the test station and any resulting system losses (or gains) were taken into account in the production of all final measurement data.

Asset#	Description	Manufacturer	Model#	Serial#	Calibration Due Date
127	Power Supply	HP	6674A	US36370530	Cal when used
158	Barometer/Thermometer	Control Company	4196	E2846	01 Dec 2016
248	Resistance Thermometer	Thermotronics	GR2105-02	9340 #1	21 Oct 2016
287	Rohde & Schwarz 40 GHz Receiver	Rhode & Schwarz	ESIB40	100201	27 Aug 2016
376	USB 10MHz - 18GHz Average Power Sensor	Agilent	U2000A	MY51440005	23 Oct 2016
378	Rohde & Schwarz 40 GHz Receiver with Generator	Rhode & Schwarz	ESIB40	100107/040	04 Aug 2016
381	4x4 RF Switch Box	MiCOM Labs	MiTest RF Switch Box	MIC002	18 Nov 2016
419	Laptop with Labview Software	Lenova	W520	TS02	Not Required
420	USB to GPIB Interface	National Instruments	GPIB-USB HS	1346738	Not Required
440	USB Wideband Power Sensor	Boonton	55006	9178	25 Sep 2016
441	USB Wideband Power Sensor	Boonton	55006	9179	25 Sep 2016
442	USB Wideband Power Sensor	Boonton	55006	9181	25 Sep 2016
445	PoE Injector	D-Link	DPE-101GL	QTAH1E2000625	Not Required
460	Dell Computer	Dell	Optiplex330	BC944G1	Not Required
461	Spectrum Analyzer	Agilent	E4440A	MY46185537	13 Aug 2016
74	Environmental Chamber Chamber 3	Tenney	TTC	12808-1	30 Sep 2016
RF#2 GPIB#1	GPIB cable to Power Supply	HP	GPIB	None	Not Required
RF#2 SMA#1	EUT to Mitest box port 1	Flexco	SMA Cable port1	None	18 Nov 2016
RF#2 SMA#2	EUT to Mitest box port 2	Flexco	SMA Cable port2	None	18 Nov 2016
RF#2 SMA#3	EUT to Mitest box port 3	Flexco	SMA Cable port3	None	18 Nov 2016
RF#2 SMA#4	EUT to Mitest box port 4	Flexco	SMA Cable port4	None	18 Nov 2016
RF#2 SMA#SA	Mitest box to SA	Flexco	SMA Cable SA	None	18 Nov 2016
RF#2 USB#1	USB Cable to Mitest Box	Dynex	USB Cable	None	Not Required

This test report may be reproduced in full only. The document may only be updated by MiCOM Labs personnel. All changes will be noted in the Document History section of the report.

7.2. Radiated Emissions

The following tests were performed using the radiated test set-up shown in the diagram below.

1).. Radiated Spurious and Band-Edge Emissions;
2) Digital Emissions

Radiated Emission Measurement Setup Pictorial Representation

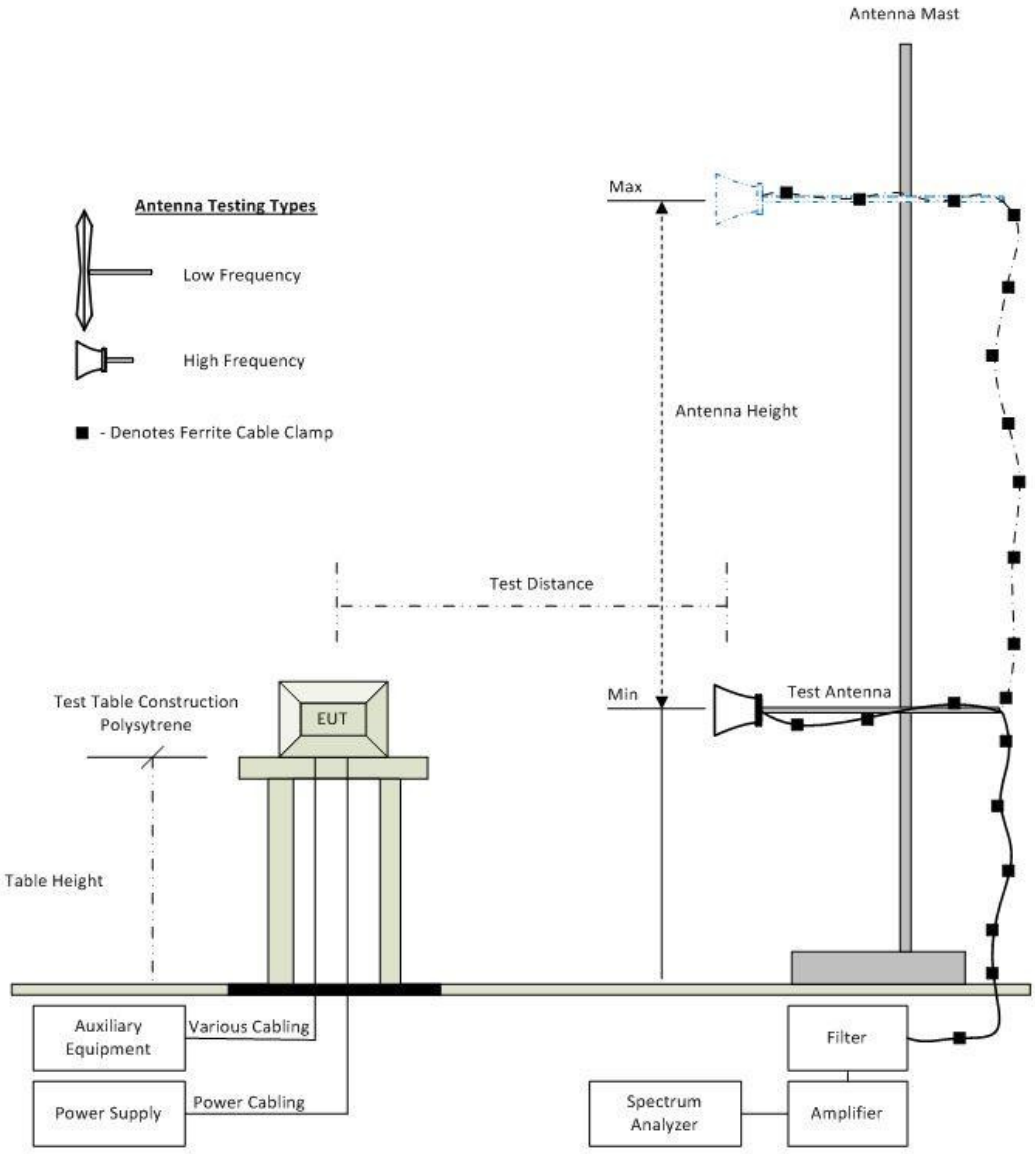

Radiated Emission Test Setup

Asset#	Description	Manufacturer	Model#	Serial#	Calibration Due Date
158	Barometer/Thermometer	Control Company	4196	E2846	01 Dec 2016
170	Video System Controller for Semi Anechoic Chamber	Panasonic	WV-CY101	04R08507	Not Required
287	Rohde & Schwarz 40 GHz Receiver	Rhode & Schwarz	ESIB40	100201	27 Aug 2016
338	Sunol 30 to 3000 MHz Antenna	Sunol	JB3	A052907	15 Aug 2016
396	2.4 GHz Notch Filter	Microtronics	BRM50701	001	18 Aug 2016
397	Amp 10 - 2500MHz	MiCOM Labs	Amp 10 - 2500 MHz	NA	9 June 2017
399	ETS 1-18 GHz Horn Antenna	ETS	3117	00154575	10 Oct 2016
406	Amplifier for Radiated Emissions	MiCOM Labs	40dB 1 to 18GHz Amp	0406	9 June 2017
410	Desktop Computer	Dell	Inspiron 620	WS38	Not Required
411	Mast/Turntable Controller	Sunol Sciences	SC98V	060199-1D	Not Required
412	USB to GPIB Interface	National Instruments	GPIB-USB HS	11B8DC2	Not Required
413	Mast Controller	Sunol Science	TWR95-4	030801-3	Not Required
415	Turntable Controller	Sunol Sciences	Turntable Controller	None	Not Required
447	Rad Emissions Test Software	MiCOM	Rad Emissions Test Software Version 1.0.73	447	Not Required
462	Schwarzbeck cable from Antenna to Amplifier.	Schwarzbeck	AK 9513	462	31 May 2017
463	Schwarzbeck cable from Amplifier to Bulkhead.	Schwarzbeck	AK 9513	463	31 May 2017
464	Schwarzbeck cable from Bulkhead to Receiver	Schwarzbeck	AK 9513	464	31 May 2017
465	Low Pass Filter DC-1000 MHz	Mini-Circuits	NLP-1200+	VUU01901402	2 June 2017
480	Cable - Bulkhead to Amp	SRC Haverhill	157-157-3050360	480	2 June 2017
481	Cable - Bulkhead to Receiver	SRC Haverhill	151-151-3050787	481	2 June 2017
482	Cable - Amp to Antenna	SRC Haverhill	157-157-3051574	482	2 June 2017

This test report may be reproduced in full only. The document may only be updated by MiCOM Labs personnel. All changes will be noted in the Document History section of the report.

7.3. AC Wireline Emission

The following tests were performed using the conducted test set-up shown in the diagram below.

1. AC Wireline Conducted Emissions

Conducted Test Set-Up Pictorial Representation

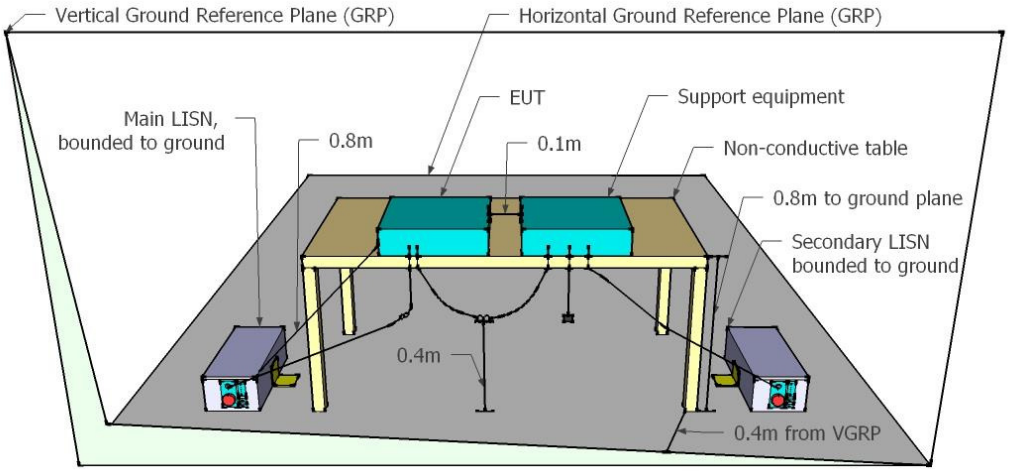

Asset#	Description	Manufacturer	Model#	Serial#	Calibration Due Date
158	Barometer/Thermometer	Control Company	4196	E2846	01 Dec 2016
184	Pulse Limiter	Rhode & Schwarz	ESH3Z2	357.8810.52	27 Oct 2016
190	LISN (two-line V-network)	Rhode & Schwarz	ESH3Z5	836679/006	29 Oct 2016
193	Receiver 20 Hz to 7 GHz	Rhode & Schwarz	ESI 7	838496/007	17 July 2016
287	Rohde & Schwarz 40 GHz Receiver	Rhode & Schwarz	ESIB40	100201	27 Aug 2016
307	BNC-CABLE	Megaphase	1689 1GVT4	15F50B002	27 Oct 2016
316	Dell desktop computer workstation with Vasona	Dell	Desktop	WS04	Not Required
372	AC Variable PS	California Instruments	1251P	L06951	Cal when used
378	Rohde & Schwarz 40 GHz Receiver with Generator	Rhode & Schwarz	ESIB40	100107/040	04 Aug 2016
388	LISN (3 Phase) 9kHz - 30MHz	Rohde & Schwarz	ESH2-Z5	892107/022	30 Oct 2016
ADAPT SMA#1	SMA Cable	Megaphase	SMA Cable #1	None	Cal when used

This test report may be reproduced in full only. The document may only be updated by MiCOM Labs personnel. All changes will be noted in the Document History section of the report.

575 Boulder Court
Pleasanton, California 94566, USA
Tel: +1 (925) 462 0304
Fax: +1 (925) 462 0306
www.micomlabs.com