Consumer Signal Booster

User's Manual

Content

1 WHAT IS INCLUDED 3
2 HOW IT WORKS 3
3 TOOL REQUIRED 3
4 HOW TO INSTALL YOUR NEW CELLULAR BOOSTER 4
4.1 Overview 4
4.2 Plan the layout of your system 6
4.3 Check for Signal Strength 6
4.4 Run coaxial cable 6
4.5 Install the Donor (Outdoor) antenna 7
4.6 Install the Server (Indoor) antenna 7
4.7 Install your cellular booster 8
4.8 Power up your cellular booster 8
4.9 Check the Cellular Booster Status 8
5 UNDERSTAND THE PORTS, MGC DIP SWITCH, LED STATUS 9
5.1 Repeater ports 9
5.2 Manual gain control (MGC) 9
5.3 LED status 10
6 UNDERSTAND THE ANTENNA 10
6.1 Donor (Outdoor) antenna 10
6.2 Server (Indoor) antenna 11
6.3 Authorized kitting options 11
7 TROUBLESHOOTING 16
8 FREQUENTLY ASKED QUESTIONS 18
9 FCC RF Exposure Statement 18
10 IC RF Exposure Statement 18
11 Warning and Statement 19
12 Specification 20

1 WHAT IS INCLUDED

1. Consumer signal booster
2. 12V/3A AC/DC Power Supply
3. Booster Mount Hardware

Warning: Unauthorized antennas,and/or coupling devices are prohibited by new FCC rules. Please contact FCC for details: 1-888-CALL-FCC.

2 HOW IT WORKS

The cellular booster provides reliable two-way cellular coverage by improving signal strength in homes, buildings, offices, and other areas where cellular reception is weak or unreliable.

The system amplifies the signal from the nearest cellular tower and retransmits at a higher power level within a local area.

This manual provides simple installation instructions that will have your cellular booster kit running in record time.

3 TOOL REQUIRED

Phillips Screwdriver

Drill

Cellular Phone (to check signal strength)

4 HOW TO INSTALL YOUR NEW CELLULAR BOOSTER

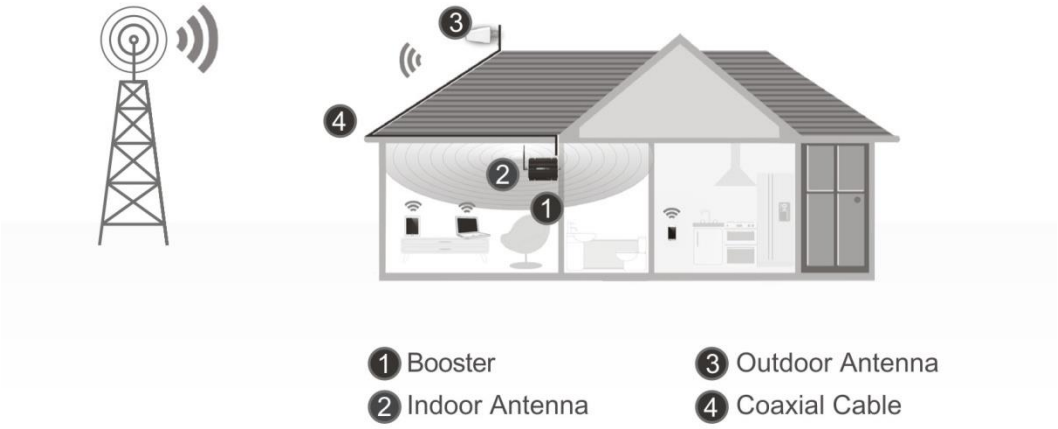

4.1 Overview

This guide will help you properly install your cellular booster kit. It is important to read through all of the installation steps before installing your equipment. Thoroughly read through the instructions, visualize where all the equipment will need to be installed and do a soft installation before mounting any equipment.

1

- **BOOSTER – select location**
- Install the booster in an area that is protected from the weather, properly ventilated and is away from excessive heat and moisture.

2

- **DONOR ANTENNA (OUTDOOR)- select location**
- Mount the signal (outdoor) antenna in an elevated outdoor location so that it points towards the cellular tower and away from where the inside antenna will be located.

3

- **OUTDOOR COAXIAL CABLE - select location**
- The outdoor coaxial cable is used to connect the donor (outdoor) antenna to the booster.

4

- **INDOOR COAXIAL CABLE- (if used)**
- The indoor coaxial cable is used to connect the server (indoor) antenna to the booster.

5

- **SERVER ANTENNA (indoor)**
- The ideal location for the distribution antenna will be the area of your property where you need to improve the signal most.
- NOTE:The signal strength will be strongest closest to the antenna.

!

- **IMPORTANT**: The signal antenna (outdoor)should always be separated from the distribution antenna (indoor)by at least 20 vertical feet including the separation of a thick barrier such as a roof or a wall. Depending on the strength of your outdoor signal, the weaker the signal the less separation distance is required.

7

- **LIGHTNING SURGE PROTECTOR- (SOLD SEPARATELY)**
- The lightning surge protector connects in between the signal antenna and the booster.
- IMPORTANT: Lightning surge protector must be grounded.

8

- COMMISSIONING THE SYSTEM

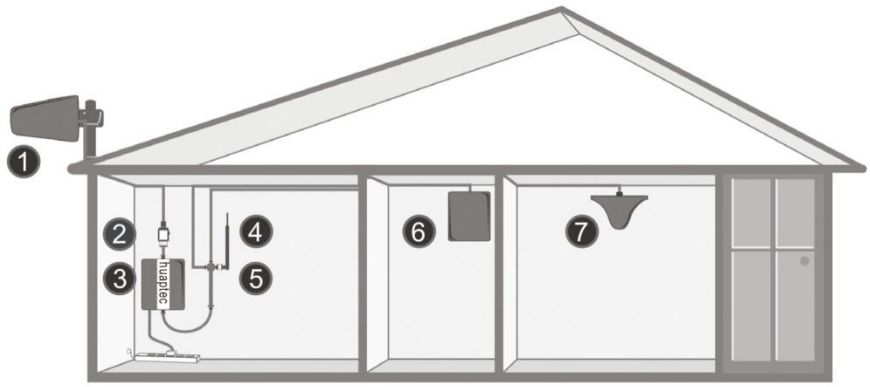

1 Donor Antenna (outdoor)
2 Surge Protector
3 Booster
4 Server Antenna (indoor)
5 Splitter (if using mutliple antenna)
6 & 7 Server Antennas (optional antennas for additional coverage)

4.2 Plan the layout of your system

Before you get started you will need to plan the layout of your system. This involves checking signal strength for signals coming from the cellular tower, as well as antenna, booster and cable placement.

4.3 Check for Signal Strength

Select a location on the roof of the building to install the signal antenna, by monitoring your cellular phone's signal strength (signal bars) to find the strongest signal from your carrier's cellular tower.

Mark that area as the installation location for the Donor (outdoor)

IMPORTANT: Confirm that you have at least 20 feet of vertical distance between the marked antenna location and the location where you will place the Server (indoor) antenna. To prevent the system from oscillation (feedback) you want to ensure that there is enough separation between the distribution and signal antenna or that they are shielded from each other to ensure the distribution antenna does not send a signal back into the signal antenna. If you cannot achieve these separations, either choose an alternate location for the donor (outdoor) antenna or determine if there are natural barriers in the building construction itself that will attenuate signals between the two antennas so that oscillation can be prevented.

4.4 Run coaxial cable

Loosely run the coaxial cable from your outdoor antenna to your booster.

(After you have tested the system you can permanently secure the coaxial cable).

As you route and pull cabling, follow these general guidelines:

- Bend cables and route them smoothly, and protect the outer skin against any damage.
- Keep horizontal cables straight and fasten them with a tie every three to five feet.
- Bind and fasten vertical cables every six to eight feet.
- Waterproof all outdoor connections with silicone caulking
- Be careful when plugging the connector in so as not to damage the center pins on the connectors.

4.5 Install the Donor (Outdoor) antenna

Connect the supplied coaxial cable to the antenna. We recommend applying silicone caulking to fully waterproof the connection.
Attach the cable in such a way that a drip loop is formed.
Once mounted, connect one end of the coaxial cable to the donor (outdoor) antenna and the other end to the cellular booster where it is marked “outdoor”

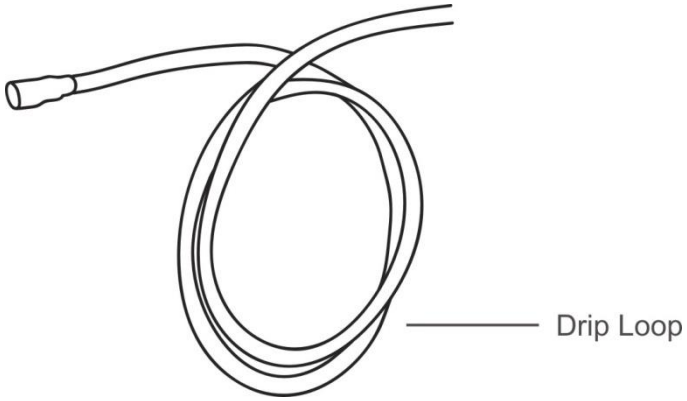

4.6 Install the Server (Indoor) antenna

Connect one end of the coaxial cable to the antenna and the other end to the cellular booster where it is marked “indoor”.

Select the installation location of your supplied server (outdoor) antenna based on the following:

Omni Ceiling directional antenna

Place in the center of the area where the signal needs to be amplified.

Panel directional antenna

Place in the outer perimeter of the area the signal needs to be amplified.

Whip Omni directional antenna

Mount directly to the connector marked “indoor” on the cellular booster.

4.7 Install your cellular booster

Install the cellular booster in a location that is properly ventilated and not exposed to excessive heat, moisture and/or direct sunlight. The optimal area would be on a wall located near a power outlet.

It should be mounted in an easily accessible area so it’s easy to perform general maintenance with the coaxial cable connections, dip switch settings and power adaptor.

Make sure all cables and antennas are securely connected before commissioning the system.

4.8 Power up your cellular booster

Once all the Following precautions have been taken, power on the cellular booster.

1. Verify that you have left at least 20 feet of vertical separation space between the indoor and outdoor antennas.
2. Never point the front of the yagi donor (outdoor) antenna towards the inside of the server (outdoor)antenna.
3. Verify that the supplied coaxial cables from both the donor (outdoor) antenna and the server (outdoor)antenna are properly connected to the cellular booster before powering it up.
4. Carefully plug in the supplied power adaptor into the back of the cellular booster where it is marked ‘power’ and connect the other end to a power outlet.

The LED indicator marked power should light up green.

4.9 Check the Cellular Booster Status

Your cellular booster comes equipped with electronic sensors designed to identify cellular signal overload or oscillation which can hinder signal boosting performance. Your cellular booster is specially designed to automatically decrease gain to compensate for these circumstances. The device also has a feature to automatically shut down in case of excessive oscillation. Improper equipment installation and unusable signal quality can cause oscillation, this is why it is important to fully understand the LED alarm lights on your booster, as they will help you identify and solve

any potential issues.

The color of the LED indicates the status of the booster system.

5 UNDERSTAND THE PORTS, MGC DIP SWITCH, LED STATUS

5.1 Repeater ports

1) Outdoor port: connected with the donor antenna by cable.
2) Indoor port: connected with server antenna directly or by cable.
3) DC IN: connected with power supply.

5.2 Manual gain control (MGC)

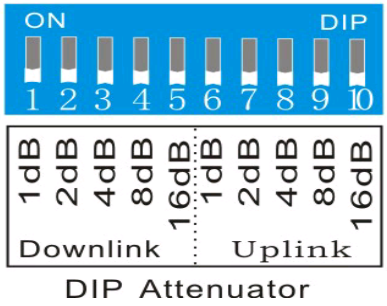

Switches 1-5 represent Downlink and 6-10 represent Uplink. When it is necessary to adjust the gain by DIP switch, firstly please adjust Downlink gain according to input signals, secondly please adjust Uplink gain according to Downlink gain.

The DIP Switches have default 'OFF' status; please push relevant switches to "ON" position if certain attenuation value needs to be achieved.

Att	1	2	3	4	5	Att.	1	2	3	4	5	Att.	1	2	3	4	5
0 dB	off	off	off	off	off	11dB	ON	ON	off	ON	off	22dB	off	ON	ON	off	ON
1 dB	ON	off	off	off	off	12dB	off	off	ON	ON	off	23dB	ON	ON	ON	off	ON
2 dB	off	ON	off	off	off	13dB	ON	off	ON	ON	off	24dB	off	off	off	ON	ON
3 dB	ON	ON	off	off	off	14dB	off	ON	ON	ON	off	25dB	ON	off	off	ON	ON
4 dB	off	off	ON	off	off	15dB	ON	ON	ON	ON	off	26dB	off	ON	off	ON	ON
5 dB	ON	off	ON	off	off	16dB	off	off	off	off	ON	27dB	ON	ON	off	ON	ON
6 dB	off	ON	ON	off	off	17dB	ON	off	off	off	ON	28dB	off	off	ON	ON	ON
7 dB	ON	ON	ON	off	off	18dB	off	ON	off	off	ON	29dB	ON	off	ON	ON	ON
8 dB	off	off	off	ON	off	19dB	ON	ON	off	off	ON	30dB	off	ON	ON	ON	ON
9 dB	ON	off	off	ON	off	20dB	off	off	ON	off	ON	31dB	ON	ON	ON	ON	ON
10 dB	off	ON	off	ON	off	21dB	ON	off	ON	off	ON						

5.3 LED status

Status and Definition of ALARM indicators; Alarm LED only works for downlink signals

Status	ALARM
Green	It is working in linearity
	attention: Input signals may be not enough
Flashing Red	There are overloading or self-oscillation, strong input signals, measures shall be taken
Flashing Green	It is working in linearity
	Attention: Please adjust MGC to increase the attenuation value, till you find the "edge point" (I.E. the Alarm LED shall stay at green color, with intention of turning Flashing Green), and let the repeater work at this point.
Off	Repeater break down

6 UNDERSTAND THE ANTENNA

6.1 Donor (Outdoor) antenna

The Yagi Lpda Antenna

The yagi is a very precise directional antenna with a powerful reach. This antenna should be installed in an elevated position and must be pointed towards your carrier's cellular tower.

NOTE:This antenna is not meant to capture signal from multiple carriers.

The Panel Antenna

The panel is a directional antenna with a 120 degree reach and is designed to capture the signal from multiple carrier towers. This antenna should be installed in an elevated position and must be pointed towards your carrier's cellular towers.

Yagi Antenna

The yagi is a very precise directional antenna with a powerful reach. This antenna should be installed in an elevated position and must be pointed towards your carrier's cellular tower.

NOTE: This antenna can only support single band signal booster.

6.2 Server (Indoor) antenna

The Whip Antenna

The whip antenna is an omni-directional antenna with a 360 degree reach. It is designed to distribute the signal from the center of the affected area. Typically it is connected directly to the booster.

The Omni Antenna

The omni antenna is an omni-directional antenna with a 360 degree reach. It is designed to distribute the signal from the center of the affected area. Typically it is installed in a false or dropped ceiling.

The Panel Antenna

The panel is a directional antenna with a 120 degree reach and is designed to distribute the signal from a perimeter wall or ceiling.

6.3 Authorized kitting options

The following accessories are authorized by the FCC to be used with the consumer signal booster.

Outdoor Antenna&Cable Kit Options

1. Kit numbers: 11-100400 Wide Band Directional Antenna 11dbi Antenna with 100' 400 N male
2. Kit numbers: 11-75400 Wide Band Directional Antenna 11dbi Antenna with 75' 400 N male
3. Kit numbers: 11-50400 Wide Band Directional Antenna 11dbi Antenna with 50' 400 N male
4. Kit numbers: 11-30400 Wide Band Directional Antenna 11dbi Antenna with 30' 400 N male
5. Kit numbers: 11-100300 Wide Band Directional Antenna 11dbi Antenna with 100' 300 N male
6. Kit numbers: 11-75300 Wide Band Directional Antenna 11dbi Antenna with 75' 300 N male
7. Kit numbers: 11-50300 Wide Band Directional Antenna 11dbi Antenna with 50' 300 N male
8. Kit numbers: 11-30300 Wide Band Directional Antenna 11dbi Antenna with 30' 300 N male
9. Kit numbers: 11-75200 Wide Band Directional Antenna 11dbi Antenna with 75' 200 N male
10. Kit numbers: 11-50200 Wide Band Directional Antenna 11dbi Antenna with 50' 200 N male
11. Kit numbers: 11-30200 Wide Band Directional Antenna 11dbi Antenna with 30' 200 N male
12. Kit numbers:10-100400 Panel Antenna with 100' 400 N male
13. Kit numbers:10-75400 Panel Antenna with 75' 400 N male
14. Kit numbers:10-50400 Panel Antenna with 50' 400 N male
15. Kit numbers:10-30400 Panel 10dbi Antenna with 30' 400 N male
16. Kit numbers:10-100300 Panel Antenna with 100' 300 N male
17. Kit numbers:10-75300 Panel Antenna with 75' 300 N male
18. Kit numbers:10-50300 Panel Antenna with 50' 300 N male
19. Kit numbers:10-30300 Panel Antenna with 30' 300 N male

20. Kit numbers:10-75200 Panel Antenna with 75' 200 N male
21. Kit numbers:10-50200 Panel Antenna with 50' 200 N male
22. Kit numbers:10-30200 Panel Antenna with 30' 200 N male
23. Kit numbers:10-100400 Panel Antenna with 100' 400 N male
24. Kit numbers:10-75400 Panel Antenna with 75' 400 N male
25. Kit numbers:10-50400 Panel Antenna with 50' 400 N male
26. Kit numbers:10-30400 Panel 10dbi Antenna with 30' 400 N male
27. Kit numbers:10-100300 Panel Antenna with 100' 300 N male
28. Kit numbers:10-75300 Panel Antenna with 75' 300 N male
29. Kit numbers:10-50300 Panel Antenna with 50' 300 N male
30. Kit numbers:10-30300 Panel Antenna with 30' 300 N male
31. Kit numbers:10-50200 Panel Antenna with 50' 200 N male
32. Kit numbers:10-30200 Panel Antenna with 30' 200 N male
33. Kit numbers:9-100400 Wide Band Directional Antenna with 100' 400 N male
34. Kit numbers:9-75400 Wide Band Directional Antenna with 75' 400 N male
35. Kit numbers:9-50400 Wide Band Directional Antenna with 50' 400 N male
36. Kit numbers:9-30400 Wide Band Directional Antenna with 30' 400 N male
37. Kit numbers:9-100300 Wide Band Directional Antenna with 100' 300 N male
38. Kit numbers:9-75300 Wide Band Directional Antenna with 75' 300 N male
39. Kit numbers:9-50300 Wide Band Directional Antenna with 50' 300 N male
40. Kit numbers:9-30300 Wide Band Directional Antenna with 30' 300 N male
41. Kit numbers:9-75200 Wide Band Directional Antenna with 75' 200 N male
42. Kit numbers:9-50200 Wide Band Directional Antenna with 50' 200 N male
43. Kit numbers:9-30200 Wide Band Directional Antenna with 30' 200 N male
44. Kit numbers:7-100400 Panel Antenna with 100' 400 N male
45. Kit numbers:7-75400 Panel Antenna with 75' 400 N male
46. Kit numbers:7-50400 Panel Antenna with 50' 400 N male
47. Kit numbers:7-30400 Panel Antenna with 30' 400 N male
48. Kit numbers:7-100300 Panel Antenna with 100' 300 N male
49. Kit numbers:7-75300 Panel Antenna with 75' 300 N male
50. Kit numbers:7-50300 Panel Antenna with 50' 300 N male
51. Kit numbers:7-30300 Panel Antenna with 30' 300 N male
52. Kit numbers:7-50200 Panel Antenna with 50' 200 N male
53. Kit numbers:7-30200 Panel Antenna with 30' 200 N male
54. Kit numbers:5-10400 Omni Directional Antenna with 100' 400 N male
55. Kit numbers:5-75400 Omni Directional Antenna with 75' 400 N male
56. Kit numbers:5-50400 Omni Directional Antenna with 50' 400 N male
57. Kit numbers:5-30400 Omni Directional Antenna with 30' 400 N male
58. Kit numbers:5-75300 Omni Directional Antenna with 75' 300 N male
59. Kit numbers:5-50300 Omni Directional Antenna with 50' 300 N male
60. Kit numbers:5-30300 Omni Directional Antenna with 30' 300 N male
61. Kit numbers:5-50200 Omni Directional Antenna with 50' 200 N male
62. Kit numbers:5-30200 Omni Directional Antenna with 30' 200 N male

Indoor Antenna&Cable Kit Options

1.2 Panel Antenna with100' 400 N male & a 50 Ohm 2-Way Splitter Kit numbers:102-100400-50
2.2 Panel Antenna with75' 400 N male & a 50 Ohm 2-Way Splitter Kit numbers:102-75400-50
3.3 Panel Antenna with100' 400 N male & a 50 Ohm 3-Way Splitter Kit numbers:103-100400-50
4.3 Panel Antenna with75' 400 N male & a 50 Ohm 3-Way Splitter Kit numbers:103-75400-50
5.3 Panel Antenna with50' 400 N male & a 50 Ohm 3-Way Splitter Kit numbers:103-50400-50
6.3 Panel Antenna with30' 400 N male & a 50 Ohm 3-Way Splitter Kit numbers:103-30400-50
7.4 Panel Antenna with100' 400 N male & a 50 Ohm 4-Way Splitter Kit numbers:104-100400-50
8.4 Panel Antenna with75' 400 N male & a 50 Ohm 4-Way Splitter Kit numbers:104-75400-50
9.4 Panel Antenna with50' 400 N male & a 50 Ohm 4-Way Splitter Kit numbers:104-50400-50
10.4 Panel Antenna with30' 400 N male & a 50 Ohm 4-Way Splitter Kit numbers:104-30400-50
11.1 Panel Antenna with100' 300 N male Kit numbers:10-100300-50
12.2 Panel Antenna with100' 300 N male & a 50 Ohm 2-Way Splitter Kit numbers:102-100300-50
13.2 Panel Antenna with75' 300 N male & a 50 Ohm 2-Way Splitter Kit numbers:102-75300-50
14.2 Panel Antenna with50' 300 N male & a 50 Ohm 2-Way Splitter Kit numbers:102-50300-50
15.3 Panel Antenna with100' 300 N male & a 50 Ohm 3-Way Splitter Kit numbers:103-100300-50
16.3 Panel Antenna with75' 300 N male & a 50 Ohm 3-Way Splitter Kit numbers:103-75300-50
17.3 Panel Antenna with50' 300 N male & a 50 Ohm 3-Way Splitter Kit numbers:103-50300-50
18.3 Panel Antenna with30' 300 N male & a 50 Ohm 3-Way Splitter Kit numbers:103-30300-50
19.4 Panel Antenna with100' 300 N male & a 50 Ohm 4-Way Splitter Kit numbers:104-100300-50
20.4 Panel Antenna with75' 300 N male & a 50 Ohm 4-Way Splitter Kit numbers:104-75300-50
21.4 Panel Antenna with50' 300 N male & a 50 Ohm 4-Way Splitter Kit numbers:104-50300-50
22.4 Panel Antenna with30' 300 N male & a 50 Ohm 4-Way Splitter Kit numbers:104-30300-50
23.1 Panel Antenna with100' 200 N male Kit numbers:10-100200-50
24.1 Panel Antenna with 75' 200 N male Kit numbers:10-75200-50
25.1 Panel Antenna with 50' 200 N male Kit numbers:10-50200-50
26.2 Panel Antenna with100' 200 N male & a 50 Ohm 2-Way Splitter Kit numbers:102-100200-50
27.2 Panel Antenna with75' 200 N male & a 50 Ohm 2-Way Splitter Kit numbers:102-75200-50
28.2 Panel Antenna with50' 200 N male & a 50 Ohm 2-Way Splitter Kit numbers:102-50200-50
29.2 Panel Antenna with30' 200 N male & a 50 Ohm 2-Way Splitter Kit numbers:102-30200-50
30.3 Panel Antenna with100' 200 N male & a 50 Ohm 3-Way Splitter Kit numbers:103-100200-50
31.3 Panel Antenna with75' 200 N male & a 50 Ohm 3-Way Splitter Kit numbers:103-75200-50
32.3 Panel Antenna with50' 200 N male & a 50 Ohm 3-Way Splitter Kit numbers:103-50200-50
33.3 Panel Antenna with30' 200 N male & a 50 Ohm 3-Way Splitter Kit numbers:103-30200-50
34.4 Panel Antenna with100' 200 N male & a 50 Ohm 4-Way Splitter Kit numbers:104-100200-50
35.4 Panel Antenna with75' 200 N male & a 50 Ohm 4-Way Splitter Kit numbers:104-75200-50
36.4 Panel Antenna with50' 200 N male & a 50 Ohm 4-Way Splitter Kit numbers:104-50200-50
37.4 Panel Antenna with30' 200 N male & a 50 Ohm 4-Way Splitter Kit numbers:104-30200-50
38.2 Panel Antenna with100' 400 N male & a 50 Ohm 2-Way Splitter Kit numbers:72-100400-50
39.2 Panel Antenna with75' 400 N male & a 50 Ohm 2-Way Splitter Kit numbers:72-75400-50
40.3 Panel Antenna with100' 400 N male & a 50 Ohm 3-Way Splitter Kit numbers:73-100400-50
41.3 Panel Antenna with75' 400 N male & a 50 Ohm 3-Way Splitter Kit numbers:73-75400-50
42.3 Panel Antenna with50' 400 N male & a 50 Ohm 3-Way Splitter Kit numbers:73-50400-50
43.3 Panel Antenna with30' 400 N male & a 50 Ohm 3-Way Splitter Kit numbers:73-30400-50
44.4 Panel Antenna with100' 400 N male & a 50 Ohm 4-Way Splitter Kit numbers:74-100400-50

45.4 Panel Antenna with75' 400 N male & a 50 Ohm 4-Way Splitter Kit numbers:74-75400-50
46.4 Panel Antenna with50' 400 N male & a 50 Ohm 4-Way Splitter Kit numbers:74-50400-50
47.4 Panel Antenna with30' 400 N male & a 50 Ohm 4-Way Splitter Kit numbers:74-30400-50
48.1 Panel Antenna with100' 300 N male Kit numbers:7-100300-50
49.2 Panel Antenna with100' 300 N male & a 50 Ohm 2-Way Splitter Kit numbers:72-100300-50
50.2 Panel Antenna with75' 300 N male & a 50 Ohm 2-Way Splitter Kit numbers:72-75300-50
51.2 Panel Antenna with50' 300 N male & a 50 Ohm 2-Way Splitter Kit numbers:72-50300-50
52.3 Panel Antenna with100' 300 N male & a 50 Ohm 3-Way Splitter Kit numbers:73-100300-50
53.3 Panel Antenna with75' 300 N male & a 50 Ohm 3-Way Splitter Kit numbers:73-75300-50
54.3 Panel Antenna with50' 300 N male & a 50 Ohm 3-Way Splitter Kit numbers:73-50300-50
55.3 Panel Antenna with30' 300 N male & a 50 Ohm 3-Way Splitter Kit numbers:73-30300-50
56.4 Panel Antenna with100' 300 N male & a 50 Ohm 4-Way Splitter Kit numbers:74-100300-50
57.4 Panel Antenna with75' 300 N male & a 50 Ohm 4-Way Splitter Kit numbers:74-75300-50
58.4 Panel Antenna with50' 300 N male & a 50 Ohm 4-Way Splitter Kit numbers:74-50300-50
59.4 Panel Antenna with30' 300 N male & a 50 Ohm 4-Way Splitter Kit numbers:74-30300-50
60.1 Panel Antenna with100' 200 N male Kit numbers:7-100200-50
61.1 Panel Antenna with 75' 200 N male Kit numbers:7-75200-50
62.1 Panel Antenna with 50' 200 N male Kit numbers:7-50200-50
63.2 Panel Antenna with100' 200 N male & a 50 Ohm 2-Way Splitter Kit numbers:72-100200-50
64.2 Panel Antenna with75' 200 N male & a 50 Ohm 2-Way Splitter Kit numbers:72-75200-50
65.2 Panel Antenna with50' 200 N male & a 50 Ohm 2-Way Splitter Kit numbers:72-50200-50
66.2 Panel Antenna with30' 200 N male & a 50 Ohm 2-Way Splitter Kit numbers:72-30200-50
67.3 Panel Antenna with100' 200 N male & a 50 Ohm 3-Way Splitter Kit numbers:73-100200-50
68.3 Panel Antenna with75' 200 N male & a 50 Ohm 3-Way Splitter Kit numbers:73-75200-50
69.3 Panel Antenna with50' 200 N male & a 50 Ohm 3-Way Splitter Kit numbers:73-50200-50
70.3 Panel Antenna with30' 200 N male & a 50 Ohm 3-Way Splitter Kit numbers:73-30200-50
71.4 Panel Antenna with100' 200 N male & a 50 Ohm 4-Way Splitter Kit numbers:74-100200-50
72.4 Panel Antenna with75' 200 N male & a 50 Ohm 4-Way Splitter Kit numbers:74-75200-50
73.4 Panel Antenna with50' 200 N male & a 50 Ohm 4-Way Splitter Kit numbers:74-50200-50
74.4 Panel Antenna with30' 200 N male & a 50 Ohm 4-Way Splitter Kit numbers:74-30200-50
75.1 Whip Antenna with100' 400 N male Kit numbers:5-100400-50
76.2 Whip Antenna with100' 400 N male & a 50 Ohm 2-Way Splitter Kit numbers:52-100400-50
77.2 Whip Antenna with75' 400 N male & a 50 Ohm 2-Way Splitter Kit numbers:52-75400-50
78.2 Whip Antenna with50' 400 N male & a 50 Ohm 2-Way Splitter Kit numbers:52-50400-50
79.2 Whip Antenna with30' 400 N male & a 50 Ohm 2-Way Splitter Kit numbers:52-30400-50
80.3 Whip Antenna with100' 400 N male & a 50 Ohm 3-Way Splitter Kit numbers:53-100400-50
81.3 Whip Antenna with75' 400 N male & a 50 Ohm 3-Way Splitter Kit numbers:53-75400-50
82.3 Whip Antenna with50' 400 N male & a 50 Ohm 3-Way Splitter Kit numbers:53-50400-50
83.3 Whip Antenna with30' 400 N male & a 50 Ohm 3-Way Splitter Kit numbers:53-30400-50
84.4 Whip Antenna with100' 400 N male & a 50 Ohm 4-Way Splitter Kit numbers:54-100400-50
85.4 Whip Antenna with75' 400 N male & a 50 Ohm 4-Way Splitter Kit numbers:54-75400-50
86.4 Whip Antenna with50' 400 N male & a 50 Ohm 4-Way Splitter Kit numbers:54-50400-50
87.4 Whip Antenna with30' 400 N male & a 50 Ohm 4-Way Splitter Kit numbers:54-30400-50
88.1 Whip Antenna with100' 300 N male Kit numbers:5-100300-50

89.1 Whip Antenna with 75' 300 N male Kit numbers:5-75300-50
90.2 Whip Antenna with100' 300 N male & a 50 Ohm 2-Way Splitter Kit numbers:52-100300-50
91.2 Whip Antenna with75' 300 N male & a 50 Ohm 2-Way Splitter Kit numbers:52-75300-50
92.2 Whip Antenna with50' 300 N male & a 50 Ohm 2-Way Splitter Kit numbers:52-50300-50
93.2 Whip Antenna with30' 300 N male & a 50 Ohm 2-Way Splitter Kit numbers:72-30300-50
94.3 Whip Antenna with100' 300 N male & a 50 Ohm 3-Way Splitter Kit numbers:53-100300-50
95.3 Whip Antenna with75' 300 N male & a 50 Ohm 3-Way Splitter Kit numbers:53-75300-50
96.3 Whip Antenna with50' 300 N male & a 50 Ohm 3-Way Splitter Kit numbers:53-50300-50
97.3 Whip Antenna with30' 300 N male & a 50 Ohm 3-Way Splitter Kit numbers:53-30300-50
98.4 Whip Antenna with100' 300 N male & a 50 Ohm 4-Way Splitter Kit numbers:54-100300-50
99.4 Whip Antenna with75' 300 N male & a 50 Ohm 4-Way Splitter Kit numbers:54-75300-50
100.4 Whip Antenna with 50' 300 N male & a 50 Ohm 4-Way Splitter Kit numbers:54-50300-50
101.4 Whip Antenna with30' 300 N male & a 50 Ohm 4-Way Splitter Kit numbers:54-30300-50
102.1 Whip Antenna with100' 200 N male Kit numbers:5-100200-50
103.1 Whip Antenna with 75' 200 N male Kit numbers:5-75200-50
104.1 Whip Antenna with 50' 200 N male Kit numbers:5-50200-50
105.1 Whip Antenna with 30' 200 N male Kit numbers:5-30200-50
106.2 Whip Antenna with100' 200 N male & a 50 Ohm 2-Way Splitter Kit numbers:52-100200-50
107.2 Whip Antenna with75' 200 N male & a 50 Ohm 2-Way Splitter Kit numbers:52-75200-50
108.2 Whip Antenna with50' 200 N male & a 50 Ohm 2-Way Splitter Kit numbers:52-50200-50
109.2 Whip Antenna with30' 200 N male & a 50 Ohm 2-Way Splitter Kit numbers:72-30200-50
110.3 Whip Antenna with100' 200 N male & a 50 Ohm 3-Way Splitter Kit numbers:53-100200-50
111.3 Whip Antenna with75' 200 N male & a 50 Ohm 3-Way Splitter Kit numbers:53-75200-50
112.3 Whip Antenna with50' 200 N male & a 50 Ohm 3-Way Splitter Kit numbers:53-50200-50
113.3 Whip Antenna with30' 200 N male & a 50 Ohm 3-Way Splitter Kit numbers:53-30200-50
114.4 Whip Antenna with100' 200 N male & a 50 Ohm 4-Way Splitter Kit numbers:54-100200-50
115.4 Whip Antenna with75' 200 N male & a 50 Ohm 4-Way Splitter Kit numbers:54-75200-50
116.4 Whip Antenna with 50' 200 N male & a 50 Ohm 4-Way Splitter Kit numbers:54-50200-50
117.4 Whip Antenna with30' 200 N male & a 50 Ohm 4-Way Splitter Kit numbers:54-30200-50
118.1 Dome Antenna with100' 400 N male Kit numbers:3-100400-50
119.1 Dome Antenna with 75' 400 N male Kit numbers:3-75400-50
120.1 Dome Antenna with 50' 400 N male Kit numbers:3-50400-50
121.2 Dome Antenna with100' 400 N male & a 50 Ohm 2-Way Splitter Kit numbers:32-100400-50
122.2 Dome Antenna with75' 400 N male & a 50 Ohm 2-Way Splitter Kit numbers:32-75400-50
123.2 Dome Antenna with50' 400 N male & a 50 Ohm 2-Way Splitter Kit numbers:32-50400-50
124.2 Dome Antenna with30' 400 N male & a 50 Ohm 2-Way Splitter Kit numbers:32-30400-50
125.3 Dome Antenna with100' 400 N male & a 50 Ohm 3-Way Splitter Kit numbers:33-100400-50
126.3 Dome Antenna with75' 400 N male & a 50 Ohm 3-Way Splitter Kit numbers:33-75400-50
127.3 Dome Antenna with50' 400 N male & a 50 Ohm 3-Way Splitter Kit numbers:33-50400-50
128.3 Dome Antenna with30' 400 N male & a 50 Ohm 3-Way Splitter Kit numbers:33-30400-50
129.4 Dome Antenna with100' 400 N male & a 50 Ohm 4-Way Splitter Kit numbers:34-100400-50
130.4 Dome Antenna with75' 400 N male & a 50 Ohm 4-Way Splitter Kit numbers:34-75400-50
131.4 Dome Antenna with50' 400 N male & a 50 Ohm 4-Way Splitter Kit numbers:34-50400-50
132.4 Dome Antenna with30' 400 N male & a 50 Ohm 4-Way Splitter Kit numbers:34-30400-50

133.1 Dome Antenna with100' 300 N male Kit numbers:3-100300-50
134.1 Dome Antenna with 75' 300 N male Kit numbers:3-75300-50
135.1 Dome Antenna with 50' 300 N male Kit numbers:3-50300-50
136.1 Dome Antenna with 30' 300 N male Kit numbers:3-30300-50
137.2 Dome Antenna with100' 300 N male & a 50 Ohm 2-Way Splitter Kit numbers:32-100300-50
138.2 Dome Antenna with75' 300 N male & a 50 Ohm 2-Way Splitter Kit numbers:32-75300-50
139.2 Dome Antenna with50' 300 N male & a 50 Ohm 2-Way Splitter Kit numbers:32-50300-50
140.2 Dome Antenna with30' 300 N male & a 50 Ohm 2-Way Splitter Kit numbers:32-30300-50
141.3 Dome Antenna with100' 300 N male & a 50 Ohm 3-Way Splitter Kit numbers:33-100300-50
142.3 Dome Antenna with75' 300 N male & a 50 Ohm 3-Way Splitter Kit numbers:33-75300-50
143.3 Dome Antenna with50' 300 N male & a 50 Ohm 3-Way Splitter Kit numbers:33-50300-50
144.3 Dome Antenna with30' 300 N male & a 50 Ohm 3-Way Splitter Kit numbers:33-30300-50
145.4 Dome Antenna with100' 300 N male & a 50 Ohm 4-Way Splitter Kit numbers:34-100300-50
146.4 Dome Antenna with75' 300 N male & a 50 Ohm 4-Way Splitter Kit numbers:34-75300-50
147.4 Dome Antenna with50' 300 N male & a 50 Ohm 4-Way Splitter Kit numbers:34-50300-50
148.4 Dome Antenna with30' 300 N male & a 50 Ohm 4-Way Splitter Kit numbers:34-30300-50
149.1 Dome Antenna with100' 200 N male Kit numbers:3-100200-50
150.1 Dome Antenna with 75' 200 N male Kit numbers:3-75200-50
151.1 Dome Antenna with 50' 200 N male Kit numbers:3-50200-50
152.1 Dome Antenna with 30' 200 N male Kit numbers:3-30200-50
153.2 Dome Antenna with100' 200 N male & a 50 Ohm 2-Way Splitter Kit numbers:32-100200-50
154.2 Dome Antenna with75' 200 N male & a 50 Ohm 2-Way Splitter Kit numbers:32-75200-50
155.2 Dome Antenna with50' 200 N male & a 50 Ohm 2-Way Splitter Kit numbers:32-50200-50
156.2 Dome Antenna with30' 200 N male & a 50 Ohm 2-Way Splitter Kit numbers:32-30200-50
157.3 Dome Antenna with100' 200 N male & a 50 Ohm 3-Way Splitter Kit numbers:33-100200-50
158.3 Dome Antenna with75' 200 N male & a 50 Ohm 3-Way Splitter Kit numbers:33-75200-50
159.3 Dome Antenna with50' 200 N male & a 50 Ohm 3-Way Splitter Kit numbers:33-50200-50
160.3 Dome Antenna with30' 200 N male & a 50 Ohm 3-Way Splitter Kit numbers:33-30200-50
161.4 Dome Antenna with100' 200 N male & a 50 Ohm 4-Way Splitter Kit numbers:34-100200-50
162.4 Dome Antenna with75' 200 N male & a 50 Ohm 4-Way Splitter Kit numbers:34-75200-50
163.4 Dome Antenna with50' 200 N male & a 50 Ohm 4-Way Splitter Kit numbers:34-50200-50
164.4 Dome Antenna with30' 200 N male & a 50 Ohm 4-Way Splitter Kit numbers:34-30200-50

7 TROUBLESHOOTING

The LED alarm lights represent the status of the booster on each frequency. When the lights are green the device is operating normally meaning that it is not experiencing any oscillation (feedback) and it is boosting the signal at maximum power. When the LED lights begin to change color from green to flashing green to flashing red, it means that particular frequency is experiencing some oscillation (feedback).

If the oscillation is excessive the booster will shut down for that particular frequency. The booster will still work for the other frequency on a multi-band booster.

Oscillation is caused when the indoor (distribution) antenna sends a signal back into the outdoor (signal) antenna. Similar to a PA system, when the microphone gets too close to the speaker it causes feedback. This will occur if your antennas are too close together, or the indoor antenna is pointed at the outdoor antenna. Make sure you have adequate separation and some type of shielding between the antennas

(Usually your roof or a cement wall is good enough).

IMPORTANT NOTES

The 2 most important things to look for when setting up your system is:

1. A good input signal (the best you can find)
2. Isolating the outdoor (donor) antenna from the indoor (server) antennas so they do not feedback into each other.

By capturing the best input signal you will be able to enjoy the maximum coverage and best quality signal inside where your Indoor antennas are located. The better the input signal, the better the output signal. In order to find the best input signal, you want to place your outdoor antenna as high as possible with the least amount of obstruction between the antenna and the cellular base tower. A clear line of site is ideal.

Isolating the signal from the antennas is done by ensuring that the antennas are not pointing to each other and by having enough distance or barrier shielding in between them. The signals travel like rays of sunlight, a directional antenna will send the signal in the direction that it is pointing. An omni directional antenna will send the signal in every direction around it. So depending on your equipment it's important to be sure that your Indoor antenna is not sending the signal back into the outdoor antenna.

THINGS TO CHECK WHEN EXPERIENCING WEAK CELLULAR SIGNAL

1. Ensure the outdoor antenna is pointing in the correct direction and is capturing adequate signal for the booster.
2. Check all connections on the cable, antennas, and booster.
3. Check cable for bends and or cuts.
4. All LED lights on the booster should be green.

5. Outdoor antenna and the indoor antennas have adequate separation and are not causing feedback.

8 FREQUENTLY ASKED QUESTIONS

WHY ARE THE LED LIGHTS TURNING FLASHING GREEN, FLASHING RED OR SHUTTING OFF?

There are certain cases where your system could be experiencing oscillation. This can be attributed to either the quality of your input signal or having your outdoor antenna and indoor antenna too close together. Please review the following guidelines to help resolve this issue:

1. Adjust the direction of the outdoor antenna. If the system is receiving a very high input signal, you can point your outdoor antenna away from the cellular tower to reduce the strength of the input signal and therefore, reduce the oscillation. Alternatively if your system is receiving a very poor quality signal (weak and unusable signal), you can point your outdoor antenna more directly towards the cellular tower to increase the strength of the input signal. Sometimes this may require completely repositioning the antenna to a location where you can achieve a line of site to the tower.
2. Increase the separation between the outdoor antenna and the indoor antenna. This can be achieved by increasing the distance between the two antennas or by placing barriers between them, such as moving the indoor antenna to an adjacent room where there would be an additional wall separating them from the outdoor antenna.
3. Manual Gain Control. Adjust the gain with the manual gain control function using the dip switches on the side of the booster.

9 FCC RF Exposure Statement

This equipment complies with FCC radiation exposure limits set forth for an uncontrolled environment. End users must follow the specific operating instruction for satisfying RF exposure compliance. This transmitter must not be co-located or operating in conjunction with any other antenna or transmitter.

10 IC RF Exposure Statement

This device is compliance with RF exposure limits. The minimum distance from body to use the device is 20CM.

Le présent appareil conforme aux conformité ou aux limites d'intensité de champ RF. La distance minimale du corps à utiliser le dispositif est de 20 CM.

11 Warning and Statement

This is a **CONSUMER** device.

BEFORE USE, you **MUST REGISTER THIS DEVICE** with your wireless provider and have your provider's consent. Most wireless providers consent to the use of signal boosters. Some providers may not consent to the use of this device on their network. If you are unsure, contact your provider.

In Canada, **BEFORE USE** you must meet all requirements set out in ISED CPC-2-1-05.

You **MUST** operate this device with approved antennas and cables as specified by the manufacturer. Antennas **MUST** be installed least 20 cm (8 inches) from (i.e., **MUST NOT** be installed within 20 cm of)any person.

You **MUST** cease operating this device immediately if requested by the FCC(or ISED in Canada) or a licensed wireless service provider.

WARNING. E911 location information may not be provided or may be inaccurate for calls served by using this device.

This device may be operated ONLY in a fixed location(i.e., may operate in a fixed location only) for in-building use.

Note: This equipment has been tested and found to comply with the limits for a Class B digital device, pursuant to Part 15 of the FCC Rules. These limits are designed to provide reasonable protection against harmful interference in a residential installation. This equipment generateds, uses and can radiate radio frequency energy and, if not installed and used in accordance with the instructions, may cause harmful interference to radio communications. However, there is no guarantee that interference will not occur in a particular installation. If this equipment does cause harmful interference to radio or television reception, which can be determined by turning the equipment off and on, the user is encouraged to try to correct the interference by one or more of the following measures:

- Reorient or relocate the receiving antenna.
- Increase the separation between the equipment and receiver.
- Connect the equipment into an outlet on a circuit different from that to which the receiver is connected.
- Consult the dealer or an experienced radio/TV technician for help.

Changes or modifications not expressly approved by Huaptec could void the user’s authority to operate the equipment.

Note: For a complete list of antennas and cables approved for use with these boosters see **Authorized ktting opions** page 11 to page 16.

FURTHER INFORMATION ON SIGNAL BOOSTER END-USE REGISTRATION

The following is currently active contact of US wireless provider for booster register.

https://www.uscellular.com/uscellular/support/fcc-booster-registration.jsp
https://www.sprint.com/legal/fcc_boosters.html
https://www.verizonwireless.com/solutions-and-services/accessories/register-signal-booster/
https://support.t-mobile.com/docs/DOC-9827
https://securec45.securewebsession.com/attsignalbooster.com/

IC Statement

This device complies with Innovation,Science and Economic Development Canada ICES-003 compliance Label: CAN ICES-3(B)/NMB-3(B).
Le présent appareil est conforme Innovation, Sciences et Développement économique Canada ICES-003 Étiquette de conformité: CAN ICES-3(B)/NMB-3(B).
Link to CPC-2-1-05
http://www.ic.gc.ca/eic/site/smt-gst.nsf/eng/sf08942.html

12 Specification

RF Specifications		**Uplink**	**Downlink**
Frequency Range	Cellular	824~849MHz	869~894MHz
	PCS1900	1850~1915MHz	1930~1995MHz
Band width	Cellular	25 MHz	
	PCS1900	65 MHz	
Max. Gain	Cellular	59.6~61.1dB	
	PCS1900	65.9~66.8dB	
Max. Output Power		18.0~19.9dBm	14.4~15.8dBm
Electrical Specifications		**Standard**	
Power Supply		Input AC100~240V,Output DC12V / 3A	
Impedance		50 ohm	
Mechanical Specifications		**Standard**	
I /O Port		N-Female	
Environment Conditions		IP40	
Dimensions		120*135*43 mm	
Weight		≤ 3Kg	