Boost Your Bars

User Manual

Professional Mobile Signal Booster

Pro20T-6S-BTW
Pro25T-6S-BTW

3150 Premier Drive,Suite 130,
Irving, TX 75063
(469) 871-2552
review@hiboost.com
www.hiboost.com

CONTENTS

Package Content ---------- 01

Authorized Accessories List ---------- 01

Introduction ---------- 02

How it Works ---------- 02

Signal Booster Status ---------- 09

Manual Gain Control (MGC) ---------- 12

APP Remote Control ---------- 13

Technical Specifications ---------- 14

FCC and ISEDC Statements ---------- 15

Warning and Statement ---------- 17

Return and Warranty Policies ---------- 18

Package Content

Pro20T-6S-BTW

Booster

Power Supply

Other Accessaries

Pro25T-6S-BTW

Booster

Power Supply

Other Accessaries

We provide all accessories needed for the signal booster. For more information please visit www.hiboost.com.

Warning: Un-authorized antennas, cables, and/or coupling devices are prohibited by new FCC rules, Please contact FCC for details: 1(888)-CALL-FCC.

Authorized Accessories List

Outdoor Antenna

Outdoor antenna TDJ-0627DSF 617-697/698-960/1710-2700MHz 8/8.5/9dBi

Indoor Antenna

Indoor antenna TDJ-0627BGA-Y 617-960MHz/1710-2700MHz 7/9dBi

Notice:Please using authorized antennas, cables, and/or coupling devices conforming with ERP/ EIRP and/or indoor-only restriction

Introduction

Thanks again for purchasing HiBoost cell phone Booster. Pro20T-6S-BTW/Pro25T-6S-BTW is a collection of precision-engineered product that improves cellular reception inside of homes and businesses by amplifying incoming and outgoing cell phone signals.

HiBoost cell Booster's exclusive cloud-based Signal Supervisor mobile application and LCD display allow users to monitor the live status of HiBoost cell phone signal boosters directly from the LCD display or remotely from a mobile device anywhere at any time.

If there are any issues while installing a HiBoost cell phone signal booster, please contact the HiBoost technical support team through the following options:

Online Support: Create a ticket or chat via Signal Supervisor App

(469) 871-2552 (M-F from 9 am – 5 pm CST)

review@hiboost.com

www.hiboost.com

How it Works

The Pro20T-6S-BTW/Pro25T-6S-BTW signal booster is designed to help mobile users improve signal in homes, offices, and other areas where cellular signal is weak or unreliable. The outdoor antenna receives the signal from the nearest cellular tower, amplifies it, and transmits to the signal booster. Then the indoor antenna will receive the signal and retransmit it to your mobile device. The signals produced by your phone are also amplified by the indoor antenna via the booster and outdoor antenna.
This manual provides simple installation instructions.

HOW TO INSTALL YOUR SIGNAL BOOSTER

1.1 Overview

This manual will help you properly install your signal booster. It is important to read through all of the installation steps before installing your equipment. Thoroughly read through the instructions, visualize where all the equipment will need to be installed and do a soft installation by placing the devices where they need to be before mounting any equipment.

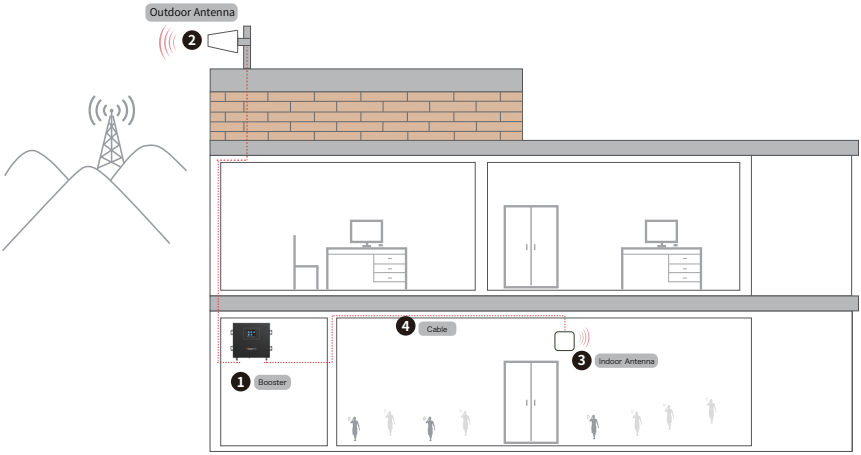

1 Pro20T-6S-BTW/Pro25T-6S-BTW Signal Booster
2 Outdoor Antenna
3 Indoor Antenna
4 Cable

1.2 Installation Preparation

Before you install

•Make sure you have sufficient cable length between the proposed outdoor/indoor antenna location and booster connector.
•Make sure the position you install the booster is near to an existing electrical outlet, well ventilated, and away from excessive heat, moisture, and direct sunlight.

Tools Required

Phillips Screwdriver

Drill

Mobile Phone

Before you get started, you will need to plan the layout of your system. This involves finding the location with the strongest received signal from the cellular tower, as well as antenna, booster, and cable placement.

General installation steps:

1.Find the strongest received signal for the location of the outdoor antenna.
2.Install the outdoor antenna on the roof to obtain the strongest downlink signal from the local cellular towers. It should also be as far away as possible from where you plan to place the indoor antenna (vertical separation is more important than horizontal separation).

3.Install the indoor antennas where you want to improve the signal level.
4.Mount the booster, connect the cables from the outdoor antenna and indoor antenna at the designated ports, and connect the booster to the AC supply (make sure all the cables are connected before applying power).

1.3 How to find the location with the strongest received signal

The outdoor signal strength the booster receives directly affects the efficiency of the indoor coverage. That is why it is crucially important to install the antenna at a good location and point it properly towards a tower where signal reception is the strongest.
There are many methods that can be used to find the strongest signal from the cellular towers. One is to use the LCD display on the booster that shows the downlink power output of the booster in each band, the other is to use a mobile phone or mobile phone app to test signal strength, and the third is to use a commercially available signal strength meter.
We highly recommend that you use the LCD display on the booster as this method is generally more convenient. However, in situations where the desired carrier's signal is much weaker than the other local signals, using a mobile phone, app or signal level meter can be a more accurate method of homing in on the best signal for installation.

•LCD Display Method

Connect the outdoor antenna to the booster's outdoor port. Fix the outdoor antenna on the roof of the building and point it to the nearest cell tower. Then have a look at the output power value displayed on the booster's LCD.

Touchable LCD display tells how strong the signal is

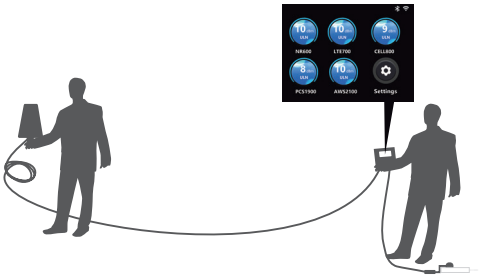

The outdoor antenna receives the strongest signal when the booster's downlink output power reaches its highest level in each band. If the LCD shows maximum power, and there are not any alarms (The LCD display does not show red, yellow or gray. Looking at the LCD display value, 12dBm-17dBm is the best), it means the present location is the best for ensuring that the booster has maximized performance.
The maximum downlink outputpower for Pro20T-6S-BTW is 12dBm, and the maximum downlink gain is 70dB.
The maximum downlink outputpower for Pro25T-6S-BTW is 17dBm, and the maximum downlink gain is 75dB.
Note: These showed values may vary dynamically at times between 1-3 dB which is normal due to outdoor signal conditions.

•Mobile Phone Method

You can use a telephone to test signal strength on the top of the building. The number of bars on the network indicator will define approximate strength of the received signal. Normally the roof of the building is the best place to receive the strongest signal. As shown on the drawing below, you need to test the signal in the points from A to E, and select the location with the best signal strength for outdoor installation. It is recommended to use a mobile app that can display in a test mode the signal level in dBm units. It is more accurate than checking the signal bars. For more details refer to http://blog.hi-boostusa.com/signal-strengthmeasure-1nstruct1ons/.

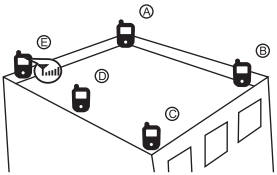

Note: Please try to receive a signal from cell towers that are not overloaded with multiple users. This can be estimated by the population density in the area served by the tower. For example, it is recommended to avoid cell towers near supermarkets, shopping malls, stadiums or any other public places visited by many people regularly. This will help maintain reliable phone call connections and higher speed data services. Mark the strongest received signal as the installation location and direction for the outdoor antenna.

1.4 Install Outdoor Antenna

Install the outdoor antenna at the the location with the strongest received signal.

IMPORTANT: Testing the signal 3 times in the desired location before installing the outdoor antenna will help ensure the most smooth and stable phone calls and data transmission.

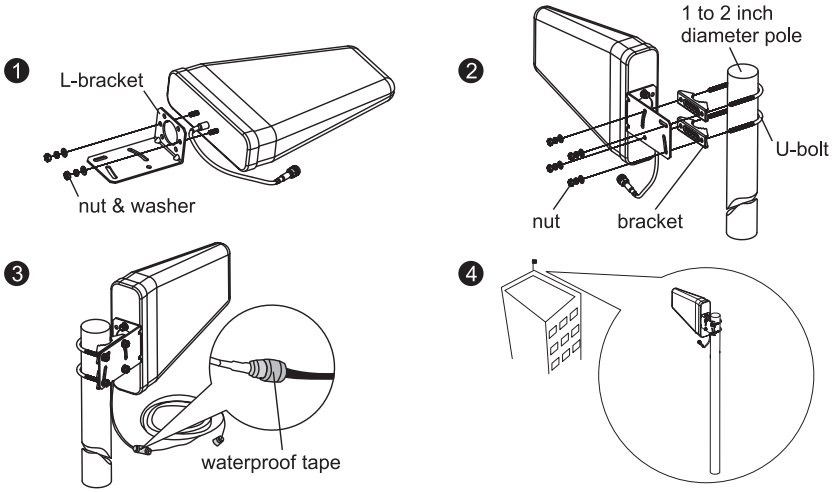

Outdoor wide band directional antenna installation for reference

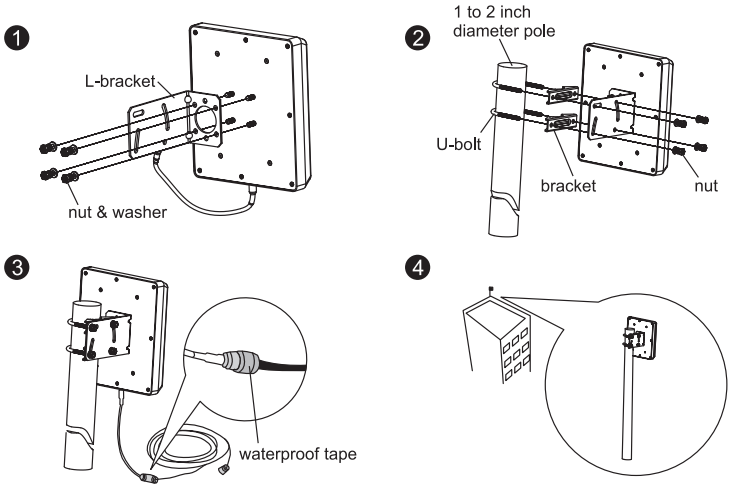

Outdoor wide band panel antenna installation for reference

Note1: Be sure the cradle is at the desired height and rotated toward the strongest cellular signal before tightening the nuts. Do not over tighten.

Note2: If the outdoor signal is lower than -110dBm, it is recommended to use a higher gain antenna such as a parabolic antenna.

1.5 Install Indoor Antenna

Select a place on a wall in the area where you need better reception. Mount the indoor antenna with the included screws as shown in the figure below.

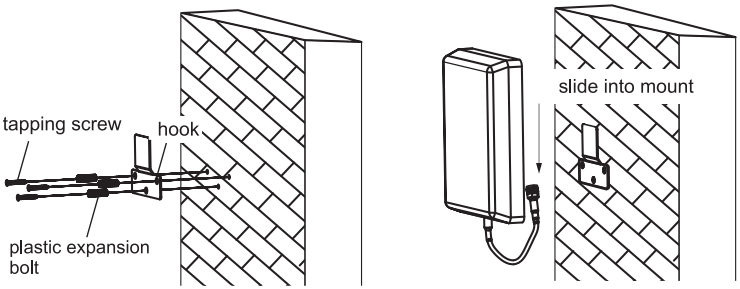

Indoor wide band panel antenna installation for reference

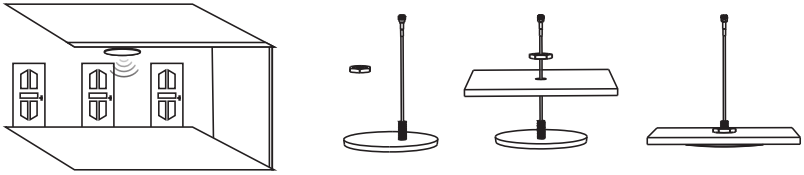

Indoor wide band dome antenna installation for reference

1.6 Install your signal booster

The signal booster should be mounted in an easily accessible area so it's easy to perform general maintenance. The area is properly ventilated and not exposed to excessive heat, moisture and/or direct sunlight. The optimal area would be on a wall located near a power outlet. Please use a surge protector rated at a minimum of 1000 Joules between the booster's power adaptor and the AC power outlet on the wall.

Mount the booster with the included screws as shown in the figure below.

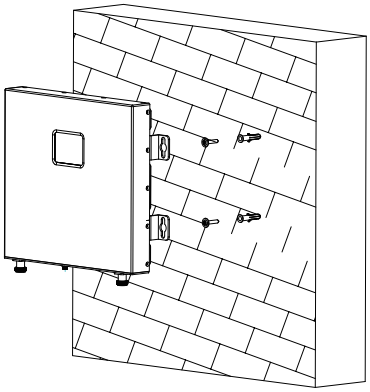

1.7 Run coaxial cable

Loosely run the coaxial cable from your outdoor antenna to your booster connector marked "Outdoor". We recommend applying waterproof tape to fully waterproof the connection.
Connect the indoor antenna cables from your indoor antenna to the booster connector marked "Indoor". Tighten the connection by hand.
(After you have tested the system you can permanently secure the coaxial cable).
As you route and pull cabling, follow these general guidelines:
•Bend cables and route them smoothly, and protect the outer skin against any damage.
•Keep horizontal cables straight and fasten them with a tie every three to five feet.
•Bind and fasten vertical cables every six to eight feet.
•Waterproof all connectors between outdoor antenna and coaxial cables with waterproof tape to avoid water or other kinds of damage.
•Be careful when plugging the connector in so as not to damage the center pins on the connectors.

1.8 Power up your signal booster

Once all the following precautions have been taken, power on the signal booster.

1.Verify that you have left at least 20 feet of vertical separation space between the indoor and outdoor antennas.
2.Never point the front of outdoor antenna towards the inside of the indoor antenna.
3.Verify that the supplied coaxial cables from both the outdoor antenna and the indoor antenna are properly connected to the signal booster before powering it up.
4.Carefully plug in the supplied power adaptor into the signal booster where it is marked'DC 12V'and connect the other end to a power outlet.

The LED indicator marked power should light up green.

Signal Booster Status

Fully reread and understand the LCD, LED indications, control buttons and MGC function on your booster, as they will help you identify and solve any potential issues.

DL Output Power Amount: Indicates the amount of DL output power for this frequency band. 12dbm(Pro20T-6S-BTW) or 17dbm(Pro25T-6S-BTW) is the best .

Band: Shows the working frequency bands the booster is operating on.

DL Output Power Status: Indicates the status of DL output power for this frequency band.

Details: Click the corresponding frequency band (the hot area range is the entire instrument panel + text) to enter the frequency band parameter details page;

Settings:Enter by clicking "Settings" to manually turn off the touch screen. In addition, if there is no touch operation on the screen for three consecutive minutes, the system will automatically turn off the screen.

Frequency band status: full gain status (normal status, blue), weak oscillation status (yellow), oscillation shutdown status (red), and user active shutdown status (gray).

BLUE: Blue icon with ULN/AOL (Normal/Overload) indicates that a band is working correctly with maximum allowable gain.

YELLOW: Yellow icon with OSC (Oscillation) indicates band gain reduction because of a slight self-oscillation condition. Due to self-oscillation issue, please check the antenna system. Reinstall antennas and increase the isolation between outdoor and indoor antennas, and then turn the booster on to reactivate the band and maximize performance. After the proper isolation is done, the yellow icon will return to blue.

Note: when the icon is yellow, the band still works normally, but the gain is reduced.

RED: Red icon with SHDN (Shutdown) indicates a band has been shut down because of a strong self-oscillation condition or an over load condition (You could click the icon to see which condition now is). 1. For the strong self-oscillation condition, please check distance and direction of outdoor antenna and indoor antenna, increase the isolation of both antennas. After the isolation is enough, the red icon will return to blue upon reboot. 2. For the over load condition, It's because of that the input signal is too strong, please adjust outdoor antenna's direction to reduce the strength of the input signal, then turn the booster, on to reactivate the band. When the gain is reduced enough, the red icon will return to blue upon reboot.

GRAY: Gray icon with DIS (Disabled) indicates band has been disabled.

Quick Troubleshooting Guide

If the booster is working normally, no further adjustment is required.

Pro20T-6S-BTW/Pro25T-6S-BTW

OVERLOAD					
	DL GAIN	OUTPUT POWER	LED LIGHT PATTERN	REASON	SOLUTION
NR600	<60dB	>=8dBm	Red(SHDN)	Outdoor signal is too strong	Direct the outdoor antenna to deviate from the mobile signal tower.
LTE700	<60dB	>=8dBm			
CELL800	<60dB	>=8dBm			
PCS1900	<60dB	>=8dBm			
AWS2100	<60dB	>=8dBm			

Self-Oscillation					
	DL GAIN	OUTPUT POWER	LED LIGHT PATTERN	REASON	SOLUTION
NR600	<60dB	>=8dBm	Yellow(OSC) or Red(SHDN)	Inadequate separation of the indoor and outdoor antennas	1、Increase vertical and horizontal distance between the outdoor and indoor antenna(s). 2、Make the outdoor antenna and the indoor antenna back to back. 3、Add barriers(e.g. walls)
LTE700	<60dB	<8dBm			
CELL800	<60dB	<8dBm			
PCS1900	<60dB	<8dBm			
AWS2100	<60dB	<8dBm			

POOR SIGNAL					
	DL GAIN	OUTPUT POWER	LED LIGHT PATTERN	REASON	SOLUTION
NR600	>=60dB	--/NEGATIVE	Blue(ULN)	Input signal is too weak	1、Try adjusting the outdoor antenna to the best direction 2、Try adjusting the outdoor antenna to another cell tower 3、Try increasing the height of the outdoor antenna and make sure there are no barriers between the tower and the outdoor antenna Please try these solutions until the output power reaches or is over -5dBm.
LTE700	>=60dB	--/NEGATIVE			
CELL800	>=60dB	--/NEGATIVE			
PCS1900	>=60dB	--/NEGATIVE			
AWS2100	>=60dB	--/NEGATIVE			

Normal but No Boosted Signal					
	DL GAIN	OUTPUT POWER	LED LIGHT PATTERN	REASON	SOLUTION
NR600	>=60dB	>=-5dBm	Blue(ULN)	1、The band is not supported 2、The Signal is from other Carriers	Check the band you are using again. If it stays at band66, get into the 'detail'/ 'Setting' of gagues on Signal Supervisor and switch off RF switch of AWS2100, then adjust the outdoor antenna again. It would be better if there are two persons and one can stay near the indoor antenna to check if the signal is boosted.
LTE700	>=60dB	>=-5dBm			
CELL800	>=60dB	>=-5dBm			
PCS1900	>=60dB	>=-5dBm			
AWS2100	>=60dB	>=-5dBm			

NORMAL					
	DL GAIN	OUTPUT POWER	LED LIGHT PATTERN	REASON	SOLUTION
NR600	>=60dB	>=-5dBm	Blue(ULN)		
LTE700	>=60dB	>=-5dBm			
CELL800	>=60dB	>=-5dBm			
PCS1900	>=60dB	>=-5dBm			
AWS2100	>=60dB	>=-5dBm			

Manual Gain Control (MGC)

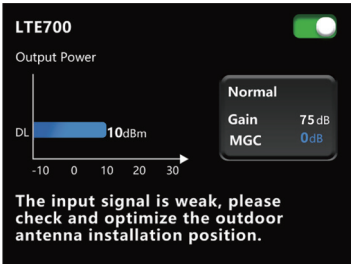

Select any frequency band you need on the LCD touch screen.

After entering the corresponding interface, you will see the MGC settings on the right. Click on the MGC box to start setting the attenuation value (the maximum setting is 31dB).

After setting, please click Confirm to successfully complete the MGC setup.
NOTE: If you want to reset MGC settings,Please swipe right and enter settings, then click the Reset button at the bottom, and finally click Confirm to complete the MGC reset.

APP Remote Control

The HiBoost six-band signal booster Pro25T-6S-BTW is designed to directly boost 2G, 3G, 4G and 5G mobile signals for end users. It not only provides remote monitoring, but also remote control to realize frequency band switching and frequency band gain adjustment.

Note: An enterprise-level account is required to log in to the "signalsupervisor" APP

The following are detailed steps on how to use the APP to control the frequency band switch and gain size:

1

2

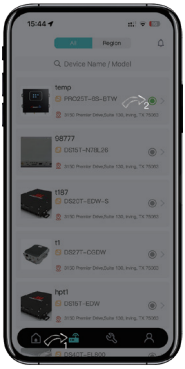

3

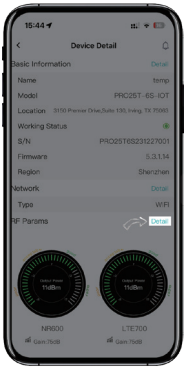

4

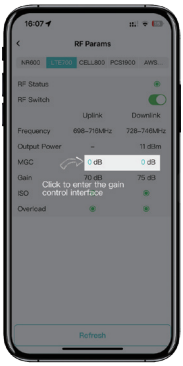

5

6

7

8

Technical Specifications

Model No.	Pro20T-6S-BTW	Pro25T-6S-BTW
Working Band	Band 71 / Band 12/17 / Band 13/ Band 5 / Band 2/25 / Band 4	
UL Frequency Range(MHz)	663-698/698-716/ 776-787/824-849/ 1850-1915/1710-1755	
DL Frequency Range(MHz)	617-652/728-746/746-757/869-894/1930-1995/2110-2155	
Supported Standards	WCDMA, UMTS,CDMA,HSPA+,EVDO,LTE,NR and all cellular standards	
Max. Gain	70 dB	75 dB
Max. output power	UL 26dBm DL 12dBm	UL 26dBm DL 17 dBm
MGC (Step Attenuation)	31 dB / 1 dB step	
I/O Port	N-Female	
Impedance	50 ohm	
Environment Conditions	IP40	
Dimensions	263 mm x 244 mm x 35 mm / 10.4 in x 9.6 in x 1.4 in	
Weight	≤ 3 kg / 6.6 lbs	
Power Supply	Input AC90～264V,50/60Hz,Output DC12V/4A	

NOTE : This product is an INDUSTRIAL SIGNAL BOOSTER.

FCC and ISEDC Statements

FCC RF EXPOSURE STATEMENT

This equipment complies with FCC radiation exposure limits set forth for an uncontrolled environment. End users must follow the specific operating instruction for satisfying RF exposure compliance. This transmitter must not be colocated or operating in conjunction with any other antenna or trans-mitte.his equipment should be installed andoperated with minimum distance 25cm between the radiator& your body.

ISEDC RF EXPOSURE STATEMENT

The devices is compliance with RF exposure limits. The minimum distance from body to use the device is 25 CM.

Le présent appareil est conforme aux conformité ou aux limites d'intensité de champ RF. La distance minimale du corps à utiliser le dispositif est de 20 CM.

This device complies with part 15 of the FCC Rules. Operation is subject to the following two conditions: (1) This device may not cause harmful interference, and (2) this device must accept any interference received, including interference that may cause undesired operation.

This equipment has been tested and found to comply with the limits for a Class B digital device, pursuant to part 15 of the FCC Rules. These limits are designed to provide reasonable protection against harmful interference in a residential installation. This equipment generates, uses and can radiate radio frequency energy and, if not installed and used in accordance with the instructions, may cause harmful interference to radio communications. However, there is no guarantee that interference will not occur in a particular installation. If this equipment does cause harmful interference to radio or television reception, which can be determined by turning the equipment off and on, the user is encouraged to try to correct the interference by one or more of the following measures:

- Re-orient or relocate the receiving antenna.
- Increase the separation between the equipment and receiver
- Connect the equipment into an outlet on a circuit different from that to which the receiver is connected
- Consult the dealer or an experienced radio/TV technician for help

Changes or modifications not expressly approved by HiBoost could void the user's authority to operate the equipment. For a complete list of antennas and cables approved for use with these boosters see Authorized Kitting Options

FCC 27.50(d)(4) Statement: Fixed, mobile, and portable (handheld) stations operating in the 1710-1755 MHz band are limited to 1-watt EIRP. Fixed stations operating in the 1710-1755 MHz band are limited to a maximum antenna height of 10 meters above ground.

FURTHER INFORMATION ON SIGNAL BOOSTER END-USE REGISTRATION

The following links are the currently active contacts for booster registration with U.S. wireless providers:
https://www.uscellular.com/uscellular/support/fcc-booster-registration.jsp
https://www.sprint.com/legal/fcc_boosters.html
https://www.verizonwireless.com/solutions-and-services/acces-sories/register-signal-booster/ https://support.t-mobile.com/docs/DOC-9827
https://securec45.securewebsession.com/attsignalbooster.com/

ISEDC Statement: This device complies with Innovation, Science, and Economic Development Canada licence-exempt RSS standard(s). Operation is subject to the following two conditions:
(1) this device may not cause interference, and
(2) this device must accept any interference, including interference that may cause undesired operation of the device.
Le présent appareil est conforme aux CNR d' Innovation, Sciences et Dévelop-pement économique Canada applicables aux appareils radio exempts de licence. L'exploitation est autorisée aux deux conditions suivantes :
(1) l'appareil nedoit pas produire de brouillage, et
(2) l'utilisateur de l'appareil doit accepter tout brouillage radioélectrique subi, même si le brouillage est susceptible d'en compromettre le fonctionnement.
This device complies with Innovation, Science and Economic Development Canada ICES-003 Compliance Label: CAN ICES-3 (B)/ NMB-3(B). Le présent appareil est conforme Innovation, science et développement économique Canada ICES-003 Étiquette de conformité: CAN ICES-3 (B) / NMB-3 (B).
Please follow the link to access the CPC-2-1-05:
http://www.ic.gc.ca/eic/site/smt-gst.nsf/eng/sf08942.html

Warning and Statement

Users of this product are cautioned to comply with following:

⚠ Booster should be installed with good grounding and lightning protection.

⚠ The power supply AC input voltage shall not exceed 240 VAC. Any maintenance operation shall be carried out only after cutting off power in advance. Only professional service is authorized for maintenance.

⚠ Do not dismantle the amplifier or maintain or replace any accessories without factory authorization. The equipment may be damaged and there is an electric shock hazard.

⚠ Do not open the booster, touch any module inside the booster, or open the cover of any module to touch the internal electronic components.The components can be damaged due to electrostatic discharge.

⚠ Please keep away from heating-equipment, because the booster will dissipate heat during operation. And do not cover booster with anything that influences heat-dissipation.

WARNING.This is NOT a CONSUMER device.It is designed for installation by FCC LICENSEES and QUALIFIED INSTALLERS . You MUST have an FCC LICENSE or express consent of an FCC Licensee to operate this device.Unauthorized use may result in significant forfeiture penalties.including penalties in excess of $100,000 for each continuing violation.

Any Changes or modifications not expressly approved by the party responsible for compliance could void the user's authority to operate the equipment.
This device complies with part 15 of the FCC Rules. Operation is subject to the following two conditions: (1) This device may not cause harmful interference, and (2) this device must accept any interference received, including interference that may cause undesired operation.

WARNING: E911 location information may not be provided or may be inaccurate for calls served BY USING THIS DEVICE.

Notice: When this device is operating in the 1710-1755 MHz band, the maximum antenna height should be a fixed height of 10 meters above ground. To meet the FCC EIRP limit, the antenna used with this amplifier must be connected by a cable with a minimum signal loss such that the combination of the antenna gain and cable loss shall not exceed 3 dB.

Return and Warranty Policies

30-Day Money-Back Guarantee: If for any reason the performance of any product is not acceptable, the product may be returned to the reseller within 30-days with proof of purchase. Please contact the customer support team.

3-Year Warranty: Signal boosters and kits are warranted for 3 years. We will repair or replace the unit and will cover the cost of delivery back to consumers located within the continental US and Canada. We will only cover shipping to our office if the booster was delivered to you recently, and was delivered defective.Damage caused by the use of non-company power supplies or other accessories is not covered under warranty.

Customers can choose to return the signal boosters and kits directly to the manufacturer at the purchaser's expense with a dated proof of purchase and a Returned Material Authorization (RMA) number supplied by us. RMA numbers may be obtained by contacting customer support at (469) 871-2552 or review@hiboost.com

This warranty does not apply to any signal boosters or kits determined by us to have been subjected to tampering, misuse, abuse, neglect, or mishandling that alters or damages physical or electronic properties.

We are not liable for any Signal Supervisor application network connectivity issues. The cell phone signal booster relies on a strong, continuous and reliable connection to the internet in order to communicate with the cell phone application. For all Signal Supervisor Application related issues, please check your network strength and call our technical support.

Failure to use a surge-protected AC power strip with at least a 1000 Joule rating will void your warranty. Damage caused by lightning is not covered by this warranty.

All of the products that are packaged with other accessory products are intended for resale and used as a single integrated system. Such product kits are required to be sold to the end-users or subsequent reseller as packaged.