0000000

Holiday show home™

FCC ID: OXGSL94-3M

Modelÿ SL94-3M

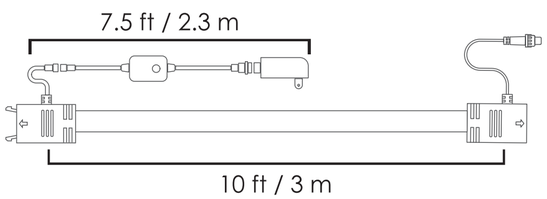

ROPE LIGHTS 3M

Instruction Manual

Troubleshooting

? A controller and adapter can connect up to three 3M Rope lights. If you have been connect more than three,the following problems may been cause.

a. The Rope lights behind the third will not light up
b. The brightness of the Rope lights will decrease
c. The Rope Lights will not light up

? If the Rope lights does not light up for a long time in some modes, you need to press the button and hold for 6 seconds until the green lights flash three times.

? If you purchased a 6M Rope lights for connecting, you can use it as two connected 3M Rope lights.

Scan & See Me!
www.ishowtree.com

Package contents and specification

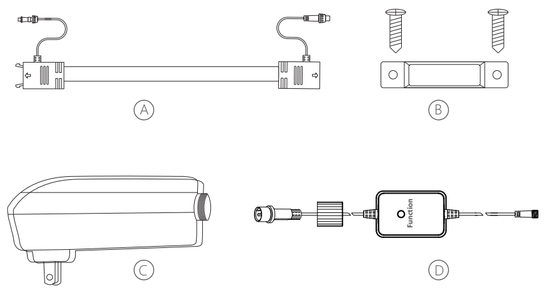

PART	DESCRIPTION	QUANTITY
A	Rope lights 3M	1
B	Securing clip	13
C	Adapter	1
D	Controller	1

Specification

INPUT: 120V ~ 60Hz, 0.64A
OUTPUT: DC24V 1.5A
OPERATION: Indoor/Outdoor
OPERATING TEMPERATURE: -15° F TO 90° F (-26° C TO 32° C)
WARRANTY: One Year Limited

Installation notes

❶ Controller connection adapter as shown

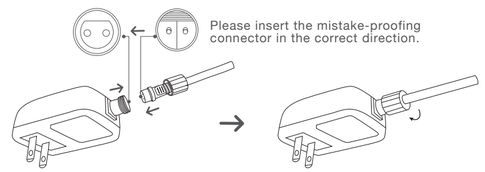

❷ The controller is connected Rope lights at the other end

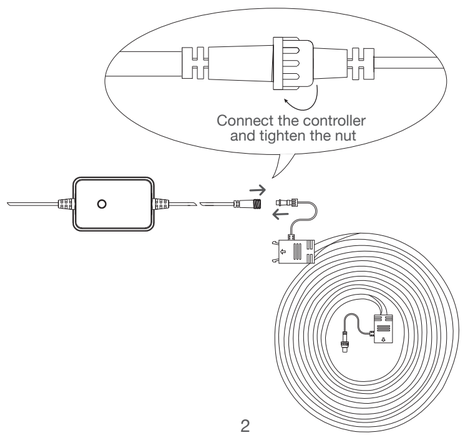

Installation notes

❸ Fix the Rope lights to the wall

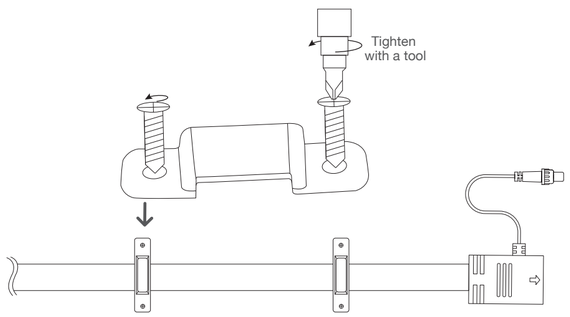

❹ Connect the power adapter to the power supply

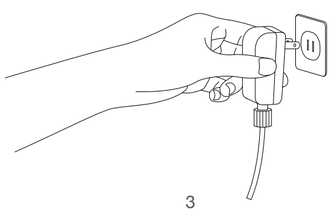

Controller operation and connecting instructions

❶ When you press the Function button, 8 kinds of modes and themes will come out.

	Modes and themes
1	OFF
2	Christmas day show 1
3	Valentines' day show 1
4	Independence day show 1
5	Thanks giving day show 2
6	St. patrick's day show 2
7	Halloween show 3
8	Multi-color show 3

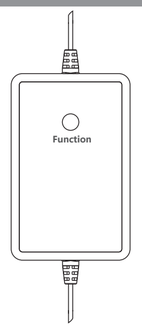

❷ When you purchase 2 sets Rope lights or more, you can make seamless joint by the following steps:

(2-1). Connection Instruction

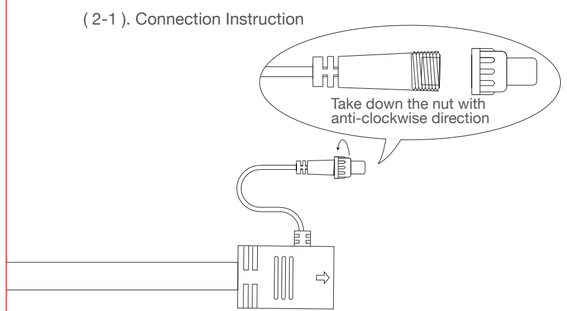

Controller operation and connecting instructions

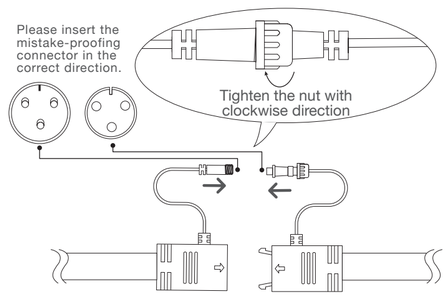

(2-2).Connect 3 sets at most (As shown in figure 2-2):

(2-3). After connection done, press function button to change the length of the rope lights

a. After connected another Rope lights successfully, you should press and hold the function button for 3 seconds until it lights up

b. When you want to reset the length of the Rope lights to one set, you should press and hold the function button for 6 seconds,until the Rope lights flash green lights 3 times.

Note: If other Rope lights have been connected behind, it will be turn off after reset operation.

(2-4). If you buy more than three Rope lights and want to connect together, you need to add more controller and adapter to achieve this. The connecting operation is shown in the figure below. Please refer to the APP manual for specific operations. (As shown in figure2-4):

Controller operation and connecting instructions

2-2

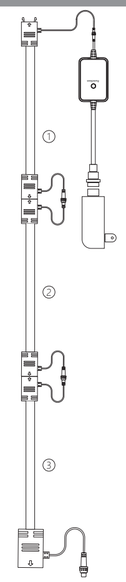

2-4

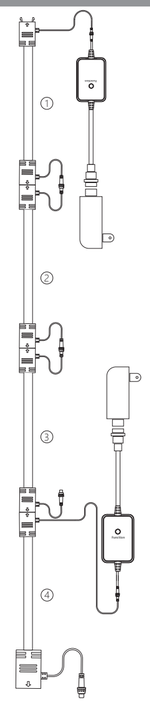

Holiday show home™

Quick Start Guide

1. Search "Holiday Showhome App" to download the APP from:

Download on the App Store | GET IT ON Google Play

2. You need to turn on the Bluetooth first, and then open app.

Your Bluetooth will connect the products automatically.

Smart device must be compatible with Bluetooth 4.0 and above

Smartphone compatibility

- Android 4.3 or higher version,Supporting 4.0 Bluetooth.
- iOS 7.0 or higher version,
  iPhone:4S,5,5S,6,6+,6S,6S+,SE,7,7+,8,8+,X.
- iPad:iPad3,ipadmini(1,2,3,4 series),
  iPad Air(1,2 series),iPad Pro.
- iPod touch

There could be a delay of 10 seconds before your phone fully sync's with your App, depending on what phone you use.

3. Control your products with the below 5 main functions on your App.

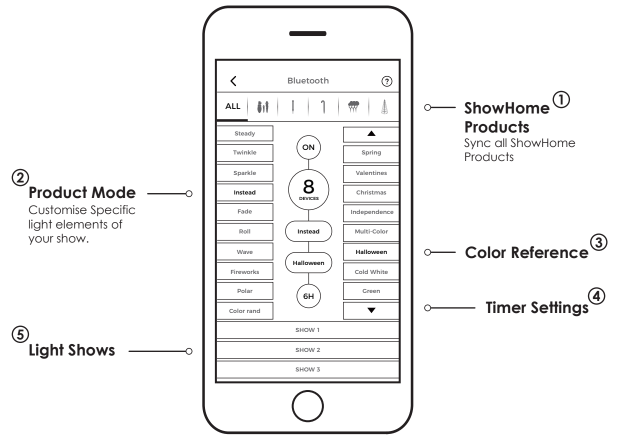

There are 29 color patterns to choose from

1	White	11	Magenta	21	Christmas day
2	Red	12	Cyan	22	Valentines' day
3	Blue	13	Yellow	23	Independence day
4	Green	14	Purple	24	Thanksgiving Day
5	Orange	15	Cold white	25	St. Patrick's day
6	Pink	16	Warm white	26	Halloween
7	Aqua	17	Spring	27	Sun
8	Gold	18	Summer	28	Earth
9	Fuchsia	19	Autumn	29	Multi Color
10	Lawn green	20	Winter		

Frequently Asked Questions

Q: My App can't connect with my products / devices

A: Connectivity issues mainly occur because of a weak bluetooth signal.Try these steps and see if they help the connection.

1.Shorten the distance between your phone and the product.

2.Turn off bluetooth functionality on your phone, and turn back on again, Try recconnecting the App with device again.

3.If the Above two options fail, then try cutting the power supply, take the plug out of the socket. Once clear for a few seconds place the plug back in to the socket and turn the power back on. Try recconnecting the App with device again.

Q: App can connect with devices, but there are no product numbers displaying on the App, or product numbers are visible, but App cannot connect and control the products.

A: 1.This could be because of a bad connection to the power supply. Unplug and insert the plug into the socket again, and turn on the power again.

2.If the present password is different between the products and App, then reset the products (to do this, cut the power supply and plug into a socket, repeat this for 3 times quickly)

3.If the above options fail, then exit the App close it down completely then turn the App back on again.

Q: If the product numbers visible are more than the actual products.

A: 1.The App may likely be connecting with nearby products, try setting a password for the products.

Q: If products change their mode without being controlled.

A: This could be because of a nearby neighbor using the App, you need to set a password for the products.

Important Safety Instructions

When using electrical products, basic precautions should always be followed including the following:

a) **Read and following all safety instrucions.**

b) Do not use seasonal products outdoors unless marked suitable for indoor and outdoor use. When products are used in outdoor applications, connect the product to a Ground Fault Circuit Interrupting (GFCI) outlet. If one is not provided, contact a qualified electrician for proper installation

c) This seasonal product is not intended for permanent installation or use.

d) Do not mount or place near gas or electric heaters, fireplace, candles or other similar sources of heat.

e) Do not secure the wiring of the product with staples or nails, or place on sharp hooks or nails.

f) Do not let lamps rest on the supply cord or on any wire.

g) Unplug the product when leaving the house, when retiring for the night, or if left unattended.

h) This is an electric product-not a toy! To avoid risk of fire, burns, personal injury and electric shock it should not be played with or placed where small children can reach it.

i) Do not use this product for other than its intended use.

j) Do not hang ornaments or other objects from cord, wire, or light string.

k) Do not close doors or windows on the product or extension cords as this may damage the wire insulation.

l) Do not cover the product with cloth, paper or any material not part of the product when in use.

m) This product employs overload protection (fuse). A blown fuse indicates and overload orshort-circuit situation. If the fuse blows, unplug the product from the outlet. Also unplug anyadditional strings or products that may be attached to the product. Replace the fuse as per the user servicing instructions (follow product marking for proper fuse rating) and check the product. If the replacement fuse blows, a short-circuit may be present and the product should be discarded.

n) Read and follow all instructions that are on the product or provided with the product.

o) **Save these instructions.**

Important Safety Instructions

Use and Care Instructions:

a) When the product is placed on a live tree, the tree should be well maintained and fresh. Do not place on live trees in which the needles are brown or break off easily. Keep the tree holder filled with water.

b) If the product is placed on a tree, the tree should be well secured and stable.

c) Before using or reusing, inspect product carefully. Discard any products that have cut, damaged, or frayed wire insulation or cords, cracks in the lampholders or enclosures, loose connectors connections, and wires.

d) When storing the product, carefully remove the product from wherever it is placed, including tree, branches, or bushes, to avoid any undue strain or stress on the product conductors, connections, and wires

e) When not in use, store neatly in a cool, dry location protected from sunlight.

User Servicing Instructions:

Replace the fuse.

a) Grasp plug and remove from the receptacle or other outlet device. Do not unplug by pulling o

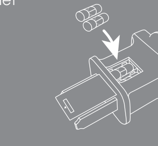

b) Open fuse cover. Slide open fuse access cover on top of attachment plug towards blades.

c) Remove fuse carefully.

d) Risk of fire. Replace fuse only with 3 Amp, 125 Volt fuse (provided with product)

e) Close fuse cover. Slide closed the fuse access cover on top of attachment plug.

f) Risk of fire. Do not replace attachment plug. Contains a safety device (fuse) that should not be removed. Discard product of the attachment plug is damaged.

If connecting to a lighting string that does not have a Wattage (W) rating {found on the tag within 6 inches of the plug} calculate the wattage as follows: Multiply the current (A) which is on the flag-type tag by 120.

For Example: Lighting string is rated 120V, 60Hz, 0.2 Amps. 0.2*120=24 Watts
Add the wattage of each light string together for a total of 216 Watts or less. (Do not exceed 216 Watts)

Important Safety Instructions

CAUTION

1. To reduce the risk of fire or electric shock, do not attempt to replace lamps or modify string.

2. To reduce the risk of fire and electric shock: a) Do not install on trees having needles leaves or branch coverings of metal or materials which look like metal, and b) Do not mount or support strings in a manner that can cut or damage wire insulation.

Model No.: SL 91A, SL 91A48, SL 91B, SL 91B48, SL92A, SL95

FEDERAL COMMUNICATIONS COMMUISSION (FCC) STATEMENT

FCC Caution: Changes or modifications not expressly approved by the party responsible for compliance could void the user's authority to operate the equipment.

Note: This equipment has been tested and found to comply with the limits for a Class B digital device, pursuant to part 15 of the FCC Rules. This device complies with Part 15 of the FCC Rules.

Operation is subject to the following two conditions:
(1) This device may not cause harmful interference, and
(2) This device must accept any interference received, including interference that may cause undesired operation.

These limits are designed to provide reasonable protection against harmful interference in a residential installation. This equipment generates, uses and can radiate radio frequency energy and, if not installed and used in accordance with the instructions, may cause harmful interference to radio communications. However, there is no guarantee that interference will not occur in a particular installation. If this equipment does cause harmful interference to radio or television reception, which can be determined by turning the equipment off and on, the user is encouraged to try to correct the interference by one or more of the following measures:-Reorient or relocate the receiving antenna.-Increase the separation between the equipment and receiver.-Connect the equipment into an outlet on a circuit different from that to which the receiver is connected.-Consult the dealer or an experienced radio/TV technician for help.

*RF warning for Mobile device:
This equipment complies with FCC radiation exposure limits set forth for an uncontrolled environment. This equipment should be installed and operated with minimum distance 20cm between the radiator & your body.