folding line
2 staples here (saddle stitching)

Diecut

Open size: 9"W x 4.5"H Folded Size: 4.5"W x 4.5"H Material: 80gsm woodfree paper Color: Grayscale

2 YEARS LIMITED WARRANTY
OR AS REQUIRED BY LOCAL LAWS

We pride ourselves on the quality of our products. For complete warranty details and a list of our worldwide offices, please visit www.targus.com. Targus product warranty does not cover any device or product that is not manufactured by Targus (including, but not limited to, laptops, smartphones, devices, or any other product that may be used in connection with the Targus product).

Targus is a registered trademark of Targus International, LLC in the U.S. and in certain other countries. Windows is a registered trademark of Microsoft Corporation in the United States and/or other countries. macOS is a trademark of Apple Inc., registered in the U.S. and other countries. All logos and registered trademarks are the property of their respective owners. ©2024 Targus, 1211 North Miller Street, Anaheim, CA 92806. All rights reserved.

Australian and New Zealand customers, please see inside of the packaging for warranty details.

For information on recycling in the United States, please visit https://us.targus.com/pages/recycling-program

GARANTIE LIMITÉE À 2 ANS
OU TEL QUE REQUIS PAR LES LOIS LOCALES

Nous sommes fiers de la qualité de nos produits. Pour obtenir plus de détails sur la garantie et une liste de nos bureaux à travers le monde, veuillez consulter www.targus.com.

La garantie des produits Targus ne couvre aucun appareil ou produit non fabriqué par Targus (y compris, mais sans s'y limiter, les ordinateurs portables, les smartphones, les périphériques ou tout autre produit pouvant être utilisé en relation avec le produit Targus).

Targus est une marque déposée de Targus International , LLC aux États-Unis et dans certains autres pays. Windows est une marque déposée de Microsoft Corporation aux États-Unis et/ou dans d'autres pays. macOS est une marque commerciale d'Apple Inc, déposée aux États-Unis et dans d'autres pays. Tous les logos et marques déposées sont la propriété de leurs propriétaires respectifs. ©2024 Targus, 1211 North Miller Street, Anaheim, CA 92806. Tous droits réservés.

Pour les clients australiens et néo-zélandais, veuillez consulter l'intérieur de l'emballage pour les détails de la garantie.

410-3815-001E / AKM610BT

Keyboard IC : 27357-00020
Mouse IC : 27357-00021
Receiver IC : 27357-00022

Keyboard FCC ID : OXM000151
Mouse FCC ID : OXM000152
Receiver FCC ID : OXM000153

CAN ICES-003(B) / NMB-003(B)

Targus

KM610
WIRELESS MOUSE & KEYBOARD COMBO

ENSEMBLE SOURIS & CLAVIER

User Guide
Manuel de l'utilisateur

Model: AMW610J (Wireless Mouse)
AKB614J (Wireless Keyboard)
AKM610JR (Wireless Receiver)
SKU: AKM610BT

folding line
2 staples here (saddle stitching)

Diecut

AKM610BT-A (50)_410-3815-001A. Open size: 9"W x 4.5"H, Material: 80gsm woodfree paper, Color: Grayscale

Installing the battery

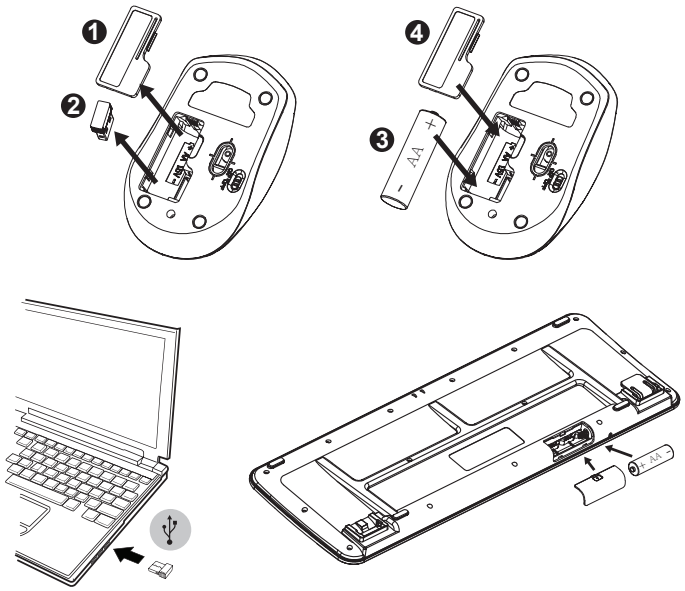

“ON/OFF” switch

User may turn off the wireless mouse by using the “ON/OFF” switch to save battery power.

Wake-up

The wireless mouse will enter Sleep Mode if no usage is detected. The mouse will be awakened when keypress is detected. If the wireless mouse is in Sleep Mode for over 10 minutes or your computer has been restarted, you have to click the mouse in order to wake it up.

Low-voltage alarming function

When the battery has been used for a long time and the battery power is low, the indicator light on the top right corner of the keyboard will flicker to remind the user to change the battery.

Contents

- Wireless Optical Mouse
- Wireless Keyboard
- USB nano receiver
- AA alkaline battery x 2
- User manual

System requirements

- Windows® 10, Windows® 8.1, Windows® 8, Windows® 7
- Mac OS® X 10.12.4 – 10.14.1

folding line
2 staples here (saddle stitching)

Diecut

AKM610BT-A (50)_410-3815-001A, Open size: 9"W x 4.5"H, Material: 80gsm woodfree paper, Color: Grayscale

Wireless Keyboard (AKB614J) for EU

Operation Frequency	2402 MHz ~2480 MHz
Rating	1.5V ⎓ 100mA
Operation Temperature	0℃ ~ 40℃
Operation Humidity	10% ~ 85% RH
Maximum EIPR Power(dBm)	0.0
Working distance (Meter)	10

Wireless Mouse (AMW610J) for EU

Operation Frequency	2402 MHz ~2480 MHz
Working Voltage	1.5V ⎓ 100mA
Operation Temperature	0℃ ~ 40℃
Operation Humidity	10% ~ 85% RH
Maximum EIPR Power(dBm)	-3.1
Working distance (Meter)	10

Wireless Receiver (AKM610JR) for EU

Operation Frequency	2402 MHz ~2480 MHz
Working Voltage	5V ⎓ 100mA
Operation Temperature	0℃ ~ 40℃
Operation Humidity	10% ~ 85% RH
Maximum EIPR Power(dBm)	-3.0
Working distance (Meter)	10

Help with setup: keyboard and mouse are not working

- Check the orientation of the batteries inside the keyboard and mouse, or replace the batteries.
- Is the USB receiver securely plugged into a computer USB port? Try moving the USB receiver to a USB port closer to the keyboard and mouse.
- If the USB receiver is plugged into a USB hub, try plugging it directly into your computer.
- Remove any metal object between the receiver and the keyboard/mouse that may interfere with reception. Try using the mouse on a different surface.
- Restart the computer.

Technical Support

For technical questions, please visit:

US	Internet: http://targus.com/us/support
Canada	Internet: http://www.targus.com/ca/support
Australia	Internet: http://www.targus.com/au/support
	Email: infoaust@targus.com
	Telephone: 1800-641-645
New Zealand	Telephone: 0800-633-222
Latin America	Email: soporte@targus.com

Product Registration

Targus recommends that you register your Targus accessory shortly after purchasing it. Go to:
http://targus.com/us/product_registration
You will need to provide your full name, email address, country of residence and product information.

2 YEAR LIMITED WARRANTY
OR AS REQUIRED BY LOCAL LAWS
We pride ourselves on the quality of our products. For complete warranty details and a list of our worldwide offices, please visit www.targus.com. Targus product warranty does not cover any device or product that is not manufactured by Targus (including, but not limited to, laptops, smartphones, devices, or any other product that may be used in connection with the Targus product).

Targus is a registered trademark of Targus International LLC in the US and in certain other countries. Windows is a registered trademark of Microsoft Corporation in the United States and/or other countries. macOS is a trademark of Apple Inc., registered in the U.S. and other countries. All logos and registered trademarks are the property of their respective owners. ©2024 Targus, 1211 North Miller Street, Anaheim, CA 92806. All rights reserved.

folding line
2 staples here (saddle stitching)

Diecut

AKM610BT-A (50)_410-3815-001A, Open size: 9'W x 4.5'H, Material: 80gsm woodfree paper, Color: Grayscale

Australian And New Zealand Consumers Only

Thank you for your purchase. Targus warrants to the original purchaser that its products are free from defects in materials and workmanship and, during the specified warranty period, lasts as long as the original purchaser owns the product. The warranty period is stated on the packaging or in documentation provided with this Targus product. Targus' Limited Product Warranty excludes damage caused by accident, neglect, abuse, misuse, improper care, normal wear and tear, ownership transfer, or alteration. The limited warranty also excludes any product that is not manufactured by Targus (including, without limitation, laptops, smartphones, devices, tablets, or any other non-Targus item) that is used in connection with the Targus product.

In the event that the Targus product has a defect in materials or workmanship Targus will, after receiving a warranty claim and inspecting the product, at its discretion, do one of the following: repair, replace, or refund with the same or a similar product (or part) of no lesser quality and ship it to the original purchaser at Targus' expense. As part of this inspection, proof of purchase will be required. There is no charge for inspection. To make a warranty claim, please contact Targus Australia or New Zealand (see details below), or return the product to the place of purchase. The original purchaser must bear the cost of the delivery to Targus.

Under Australian and/or New Zealand Consumer Laws, in addition to any warranty Targus gives, our products come with guarantees that cannot be excluded. You are entitled to a replacement or refund for a major failure and compensation for any other reasonably foreseeable loss or damage. You are entitled to have the products repaired or replaced if they fail to be of acceptable quality and the failure does not amount to a major failure.

For any warranty question, contact Targus Australia Pty. Ltd. (i) by mail at Suite 2, Level 8, 5 Rider Boulevard, Rhodes NSW 2138, by phone AUS 1800 641 645 or NZ 0800 633 222 or by Email: infoaust@targus.com. For additional information, check out our website at targus.com/au/warranty.

Targus KM610 Wireless Mouse & Keyboard Combo

Federal Communication Commission

Tested to Comply

This device complies with part 15 of the FCC Rules. Operation is subject to the following two conditions:

(1) This device may not cause harmful interference, and

(2) this device must accept any interference received, including interference that may cause undesired operation.

This equipment has been tested and found to comply with the limits for a Class B digital device, pursuant to part 15 of the FCC Rules. These limits are designed to provide reasonable protection against harmful interference in a residential installation. This equipment generates, uses and can radiate radio frequency energy and, if not installed and used in accordance with the instructions, may cause harmful interference to radio communications. However, there is no guarantee that interference will not occur in a particular installation. If this equipment does cause harmful interference to radio or television reception, which can be determined by turning the equipment off and on, the user is encouraged to try to correct the interference by one or more of the following measures:

- Reorient or relocate the receiving antenna.
- Increase the separation between the equipment and receiver.
- Connect the equipment into an outlet on a circuit different from that to which the receiver is connected.
- Consult the dealer or an experienced radio/TV technician for help.

MODIFICATION: Any changes or modifications not expressly approved by the grantee of this device could void the user's authority to operate the device.

Industry Canada statement

This device contains licence-exempt transmitter(s)/receiver(s) that comply with Innovation, Science and Economic Development Canada's licence-exempt RSS(s). Operation is subject to the following two conditions:

1. This device may not cause interference.
2. This device must accept any interference, including interference that may cause undesired operation of the device.

L'émetteur/récepteur exempt de licence contenu dans le présent appareil est conforme aux CNR d'Innovation, Sciences et Développement économique Canada applicables aux appareils radio exempts de licence. L'exploitation est autorisée aux deux conditions suivantes:

1. L'appareil ne doit pas produire de brouillage;
2. L'appareil doit accepter tout brouillage radioélectrique subi, même si le brouillage est susceptible d'en compromettre le fonctionnement.

folding line
2 staples here (saddle stitching)

Diecut

AKM610BT-A (50)_410-3815-001A. Open size: 9'W x 4.5'H, Material: 80gsm woodfree paper, Color: Grayscale

Declaration of Conformity

Hereby, Targus declares that this device is in compliance with the essential requirements and other relevant provisions of Radio Equipment Directive 2014/53/EU.

Targus

Supplier's Declaration of Conformity

Manufacturer/ Responsible Party :	Targus International LLC	Tel:	1-714-765-5555
Address :	1211 North Miller Street,	Fax:	1-714-765-5599
	Anaheim, CA 92806 USA	Internet:	www.targus.com

Hereby declares that the Product

Trade name: **Targus**

Product name: Wireless Keyboard (Model: AKB614J), Wireless Mouse (Model: AMW610J), Wireless Receiver (Model: AKM610JR)

Model number(Reg#): AKB614J, AMW610J, AKM610JR

Conforms to the following specifications

FCC CFR Title 47 Part 15 Subpart B and ANSI C63.4-2014 standard limits
The test data & results are referred to the test report Number: 240411036SZN-003

Supplementary Information:

This device complies with part 15 of the FCC Rules. Operation is subject to the following two conditions: (1) This device may not cause harmful interference, and (2) this device must accept any interference received, including interference that may cause undesired operation.

Director, Targus International LLC	CF Ngoh
Function Title	Name
08-11-2024	
Date	Signed for and on behalf of Targus