# PreView® Sentry™

## ST82XXX & ST87XXX Series

### Sensor Operating Manual

www.preco.com

## FCC STATEMENT

This device complies with Part 15 of the FCC Rules. Operation is subject to the following two conditions: (1) this device may not cause harmful interference, and (2) this device must accept any interference received, including interference that may cause undesired operation.

*Warning*: Changes or modifications to this unit not expressly approved by the party responsible for compliance could void the user's authority to operate the equipment.

*NOTE:* This equipment has been tested and found to comply with the limits of a Class B digital device, pursuant to Part 15 of the FCC Rules. These limits are designed to provide reasonable protection against harmful interference in a residential installation. This equipment generates, uses, and can radiate radio frequency energy and, if not installed and used in accordance with the instructions, may cause harmful interference to radio communications. However, there is no guarantee that interference will not occur in a particular installation. If this equipment does cause harmful interference to radio or television reception, which can be determined by turning the equipment off and on, the user is encouraged to try and correct the interference.

## INDUSTRY CANADA STATEMENT

Per RSS-Gen, Section 8.4 This device complies with Industry Canada license-exempt RSS standard(s). Operation is subject to the following two conditions: (1) this device may not cause interference, and (2) this device must accept any interference, including interference that may cause undesired operation of the device.

Par RSS - Gen, Section 8.4 Cet appareil est conforme à Industrie Canada exempts de licence standards RSS. Le fonctionnement est soumis aux deux conditions suivantes : (1 ) ce dispositif ne peut pas provoquer d'interférences et ( 2) cet appareil doit accepter toute interférence , y compris les interférences qui peuvent causer un mauvais fonctionnement de l'appareil.

TRADEMARKS

The names of actual companies and products mentioned herein may be the trademarks of their respective owners. Any rights not expressly granted herein are reserved.

# Contents

**Overview** ..... **1**
Product Description ..... 1
Other Sensor Features ..... 4
**Sensor Interfaces and Configuration** ..... **5**
Communication ..... 5
Alarm Output ..... 5
Sensor Input ..... 5
Cable Connection ..... 5
Technical Data ..... 6
Regulatory Compliance ..... 9
**Installation** ..... **10**
Sensor Mounting ..... 10
Mounting Tolerances ..... 10
Keep Out/Interference Zones ..... 11
Sensor Mounting Procedure ..... 13
**Initial System Power Up and Test** ..... **15**
**Object Detection Capability** ..... **16**
**Notes on Safety and Risks** ..... **18**
Owner Responsibilities ..... 18
**PreView® Sentry™ Daily Maintenance** ..... **19**
**Warranty Information** ..... **21**

# Tables

Table 1. PreView® Sentry™ Models ..... 2

# Figures

Figure 1. PreView® Sentry™ Radar Sensor ..... 1
Figure 2. Adjustable Detection Zone ..... 2
Figure 3. Detection Zone (FOV) 3M ..... 3
Figure 4. Detection Zone (FOV) 10M ..... 3
Figure 5. Deutsch Connector Pin Out (ST87xxx Series) ..... 6
Figure 6. Conxall Connector Pin Out (ST82xxx Series). ..... 6
Figure 7. PreView® Sentry™ Radar Sensor Dimensions ..... 7
Figure 8. Sensor Specifications ..... 8
Figure 9. Vertical and Horizontal Angle Mounting Tolerances ..... 11
Figure 10. Mounting Angle Height Exceptions ..... 11
Figure 11. Keep Out Zones ..... 12
Figure 12. Adjustable Mounting Bracket ..... 14

Figure 13. Object Reflection.....17

# Overview

This document describes the PreView® Sentry™ radar sensor manufactured by Preco™ Electronics, Inc., located in Boise, Idaho, USA. The document does not claim to cover all the possible applications or deployment areas for these devices. This document may be amended, corrected, and enhanced in keeping with the sensor development progress.

## Product Description

The PreView® Sentry™ is a small, rugged, short/medium range radar sensor (operating at 24.00 – 24.25GHz ISM band) designed by Preco™ Electronics for use in heavy duty applications, such as trucks/busses, construction, mining, waste, utilities, and other applications requiring a robust, high-performance radar. This frequency band is legal throughout most of the world, but check with PRECO or your country's regulations before purchasing.

**Figure 1. PreView® Sentry™ Radar Sensor**

The PreView® Sentry™ radar sensor works in adverse weather conditions, has a wide operating temperature range, is sealed to meet IP69K, withstands high vibration and shock levels, and is maintenance free.

Using a frequency modulated transmit waveform, the PreView® Sentry™ radar sensor measures radial range, speed and angle, reflectivity, and other parameters of multiple stationary and moving targets simultaneously. This radar sensor has a wide horizontal field of view up to +/-75°, providing coverage flexibility to be a solution for virtually any application. Figure 2 below illustrates an example of Preco's adjustable detection zone.

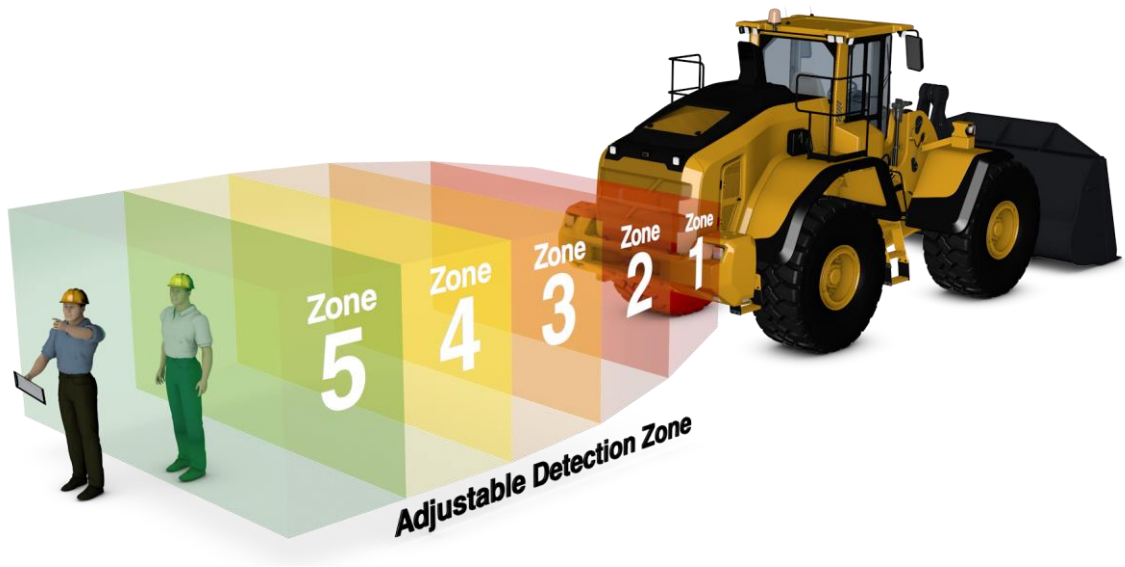


**Figure 2. Adjustable Detection Zone**

The PreView® Sentry™ radar sensor has multiple models with preconfigured detection zones: both Range and Width of detection zone. **Note:** the Preco.com website contains the most current data on radar sensor models.

PreView® Sentry™ ST87xxx Series radar sensors include an 8-pin Deutsch connector pigtail as shown in Figure 1. The PreView® Sentry™ ST82xxx Series radar sensors use an 8-pin Conxall connector on the back of the radar.

**Table 1. PreView® Sentry™ Models**

| Sentry Model Number | Detection Range (m) | Detection Range (ft) | Detection Width (m) | Detection Width (ft) |
|---|---|---|---|---|
| ST8703 | 3 | 10 | 3 | 10 |
| ST8704 | 4.5 | 15 | 4 | 13 |
| ST8706 | 6 | 20 | 5 | 16 |
| ST8710 | 10 | 33 | 6 | 20 |
| ST8720 | 20 | 66 | 8 | 26 |
| ST8730 | 30 | 98 | 10 | 33 |

Figure 3 below illustrates a truck backing application with the radar detection zone set to a Range of 10m and a Width of 3m.

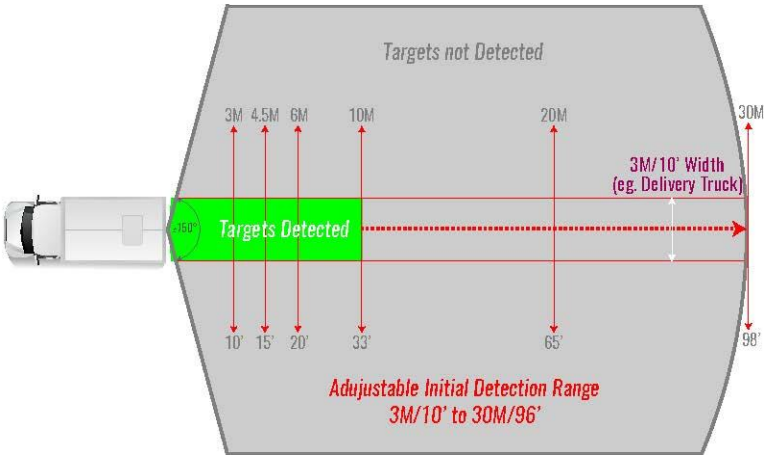


**Figure 3. Detection Zone (FOV) 3M**

Figure 4 below illustrates a mining haul truck backing application with the radar detection zone set to a Range of 30m and a Width of 10m.

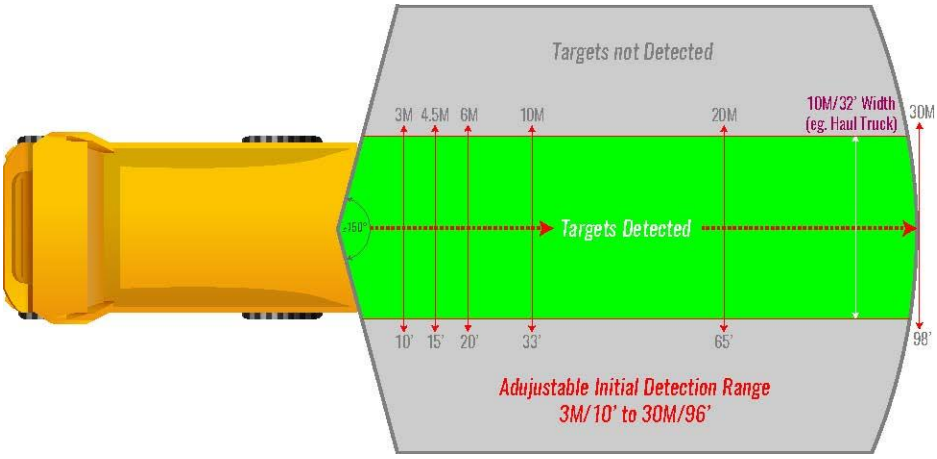


**Figure 4. Detection Zone (FOV) 10M**

The PreView® Sentry™ radar sensor utilizes a single beam monopulse radar architecture. This architecture uses a single radar beam across the field of view to determine the range, velocity, and angle of targets. The transceiver design is based on a SiGe MMIC chipset operating in the 24 GHz ISM band.

The sensor is active and starts reporting detections within 300 milliseconds (ms) after power up. The radar scans approximately every 100 ms. The sensor reaction time (time to report a validated detection) is also 300 ms. A valid target is one which has been tracked for three radar scans.

The PreView® Sentry™ radar sensor performance is not affected by other PreView® Sentry™ or similar sensors operating in close proximity with each other.

## Other Sensor Features

The PreView® Sentry™ radar sensor has a continuous Built-In-Self-Test (BIST) that notifies the operator display of sensor failure within a fraction of a second. This test functions by monitoring the transmit and receive performance as well as other internal operations.

The PreView® Sentry™ radar sensor can also determine if the face of the sensor is blocked with excessive ice, mud, or snow that is impeding proper operation. This blockage is then reported to the operator display.

Both the self-test and blockage detection features are important to fail-safe operation.

# Sensor Interfaces and Configuration

## Communication

The PreView® Sentry™ radar sensor has one CAN interface as specified in ISO 11898-2 with a transmission rate of 250 KBits/second. The CAN Bus is internally terminated with a 120 ohm resistor between CAN H and CAN L. The sensor communicates with the operator display (HMI) using this interface.

Since CAN is a standard communication interface, the sensor can be connected to other CAN controllers, telematics interfaces, displays, etc. For custom installations, the CAN bus protocol is available from Preco™ Electronics. However, it is not described in this document.

## Alarm Output

The PreView® Sentry™ radar sensor provides an auxiliary output that can be used to activate an external backup alarm or other devices as desired. The output is switched from a high impedance state to ground when active and is protected against an over-current or electrical short condition. The maximum operating current is approximately 1 amp, including any inrush current.

## Sensor Input

The PreView® Sentry™ radar sensor provides an auxiliary input that can be used to…

## Cable Connection

The PreView® Sentry™ radar sensor comes equipped with a pigtail harness terminated with either a Deutsch DT connector (ST87xxx series) or a Conxall Connector (ST82xxx Series). The pinout for the Deutsch connector is defined in Figure 5. The mate for this connector is a Deutsch DT04-08PA-CE01.

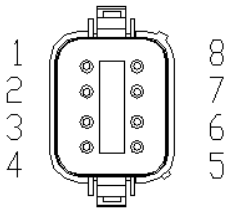


CONNECTOR END VIEW
DEUTSCH DT06-08SA-E008

| CONNECTOR PIN OUT | |
|---|---|
| PIN | DESCRIPTION |
| 1 | BATTERY PWR INPUT(+) |
| 2 | GROUND |
| 3 | CAN HIGH |
| 4 | CAN LOW |
| 5 | DISPLAY PWR OUTPUT(+) |
| 6 | DISPLAY GND |
| 7 | ALARM OUT (ACTIVE LOW) |
| 8 | REVERSE |

**Figure 5. Deutsch Connector Pin Out (ST87xxx Series)**

Figure 6 below shows the pinout for the Conxall connector (ST82xxx Series). The mate for the Conxall connector is P/N 6280-8SG-XXX

Insert Figure 6 for Conxall Connector Pin Out (ST82xxx Series).

**Figure 6. Conxall Connector Pin Out (ST82xxx Series).**

Preco™ Electronics provides a variety of different cable lengths and configurations for the PreView® Sentry™ radar sensor, as well as solution kits of radar, cabling and displays. Please contact Preco™ Electronics for a list of available cables and kits.

## Technical Data

The following figures provide the dimensions and specifications for the PreView® Sentry™ radar sensor.

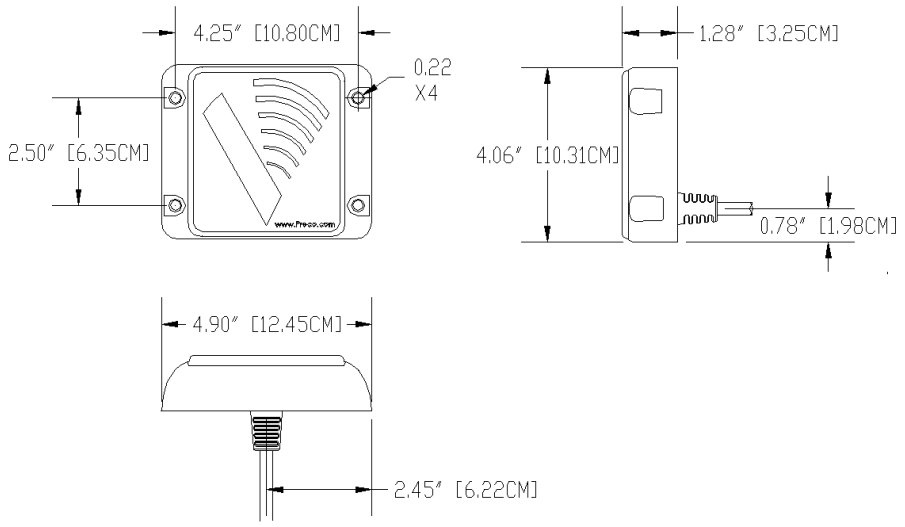


**Figure 7. PreView® Sentry™ Radar Sensor Dimensions Model ST87XXX**

Need to include drawing of ST82XXX series

## Measuring Performance

| | |
|---|---|
| Range: | 0 – 30m (10dBsm target) depending on model number |
| Range Accuracy: | 0.3m |
| Azimuth Field of View: | ±75 degrees (10dBsm target) |
| Elevation Field of View: | ±10 degrees (10dBsm target) |
| Angle Accuracy: | ±2° @ ±10° FOV, ±5 @ ±30° FOV, ±10 @ ±75° FOV |
| Velocity Range: | ± 9 meters/sec (± 20 mph) |
| Velocity Accuracy: | 0.2 meter/sec (0.5 mph) |
| Target Resolution: | 1.4m for static targets, approaching 0.3 meters for dynamic targets |
| Cycle Time: | 120ms (A CAN bus target message is provided in every cycle.) |

## Operating Conditions

| | |
|---|---|
| Frequency: | 24.05 – 24.25GHz |
| Power Supply: | 9 – 33VDC, Reverse polarity and over-voltage protected |
| Current: | <0.5A |
| Operating Temperature: | -40°C to +85°C |
| Storage Temperature: | -55°C to +105°C |
| Shock: | 50G |
| Vibration: | 25G, random, all three axis |
| Protection Rating: | IP69K |

## Operating Modes

| | |
|---|---|
| Detection Pattern: | Fixed based on model number |
| Target Detection Time: | 300ms |
| Power On to Active Time: | 300ms |

## Communications Interface

| | |
|---|---|
| J1939 CAN Bus: | 250Kbits/sec, terminated with 120 ohm resistor |
| LED Interface | Switch to ground, sink up to 1A, over current protected |

## Physical Characteristics

| | |
|---|---|
| Sealing: | IP69K |
| Housing Material: | Polycarbonate radome |
| Dimensions: | 4.90” (w) x 4.06” (h) x 1.28” (d) (12.4cm x 10.3cm x 3.25cm) |
| Weight: | 1.0 lb (0.45kg). |
| Mounting: | Four 0.22" (5.6mm) diameter mounting holes. |

**Figure 8. Sensor Specifications**

## Regulatory Compliance

The PreView® Sentry™ radar sensor is compliant with the following countries/regions and their regulations as of the published date of this manual. The sensor may be compliant in other countries/regions. Please check your local regulations.

- **United States -** Federal Communications Commission - Part 15.249
    - **FCCID:** OXZJCKP2016
- **Canada** - RSS-210 Radio Standards Specification
- **European Union** - ETSI EN300 440-1 Electromagnetic Compatibility and Radio Spectrum Matters (ERM)
- **Australia/New Zealand** - AS/NZ 4268 Radio Equipment and Services – Short Range Devices

# Installation

## Sensor Mounting

The PreView® Sentry™ radar sensor mounting location is important for proper system operation. Ideally the sensor should be mounted on the rear of the vehicle as close to the center as possible at roughly 36” (1m) above the ground. The sensor face should be perpendicular to the ground with the small end of the “V” graphic on the sensor face pointing down. Select a location that will provide some protection from impact and debris while allowing an unobstructed view of the target hazard area. Refer to the Keep Out/Interference Zones listed below.

## Mounting Tolerances

Mounting height tolerance at 36” should be within +/- 12” (0.3m). For optimal performance, the vertical angle (Up/Down) tolerances are +5 degrees (up) and -2 degrees (down), and the horizontal angle tolerance is +/- 5 degrees.

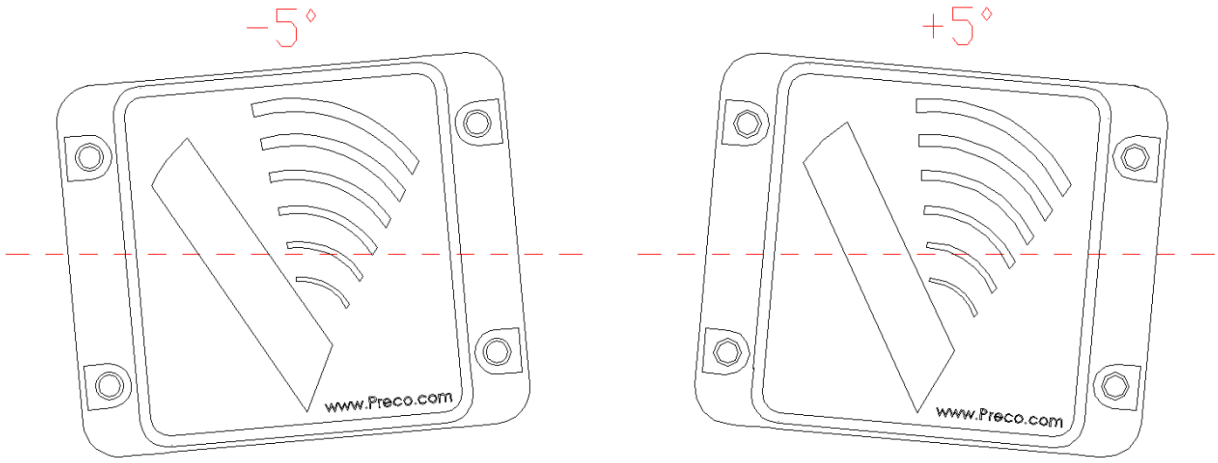

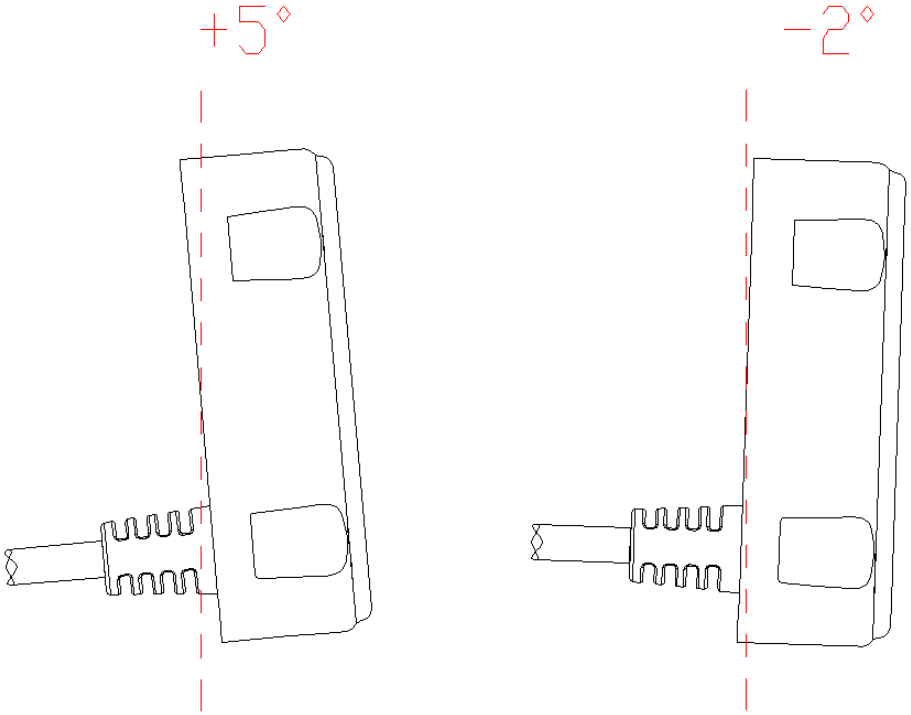


**Figure 9. Vertical and Horizontal Angle Mounting Tolerances**

Exceptions: if mounting higher than 4 feet (1.3m), the sensor can be angled down a few degrees as necessary.

(Insert diagram/chart showing mounting heights vs. angles)

**Figure 10. Mounting Angle Height Exceptions**

The performance of the sensor can be negatively impacted if the sensor is angled down, causing false detection from the ground. Any time the sensor is not perpendicular to the ground, the performance should be tested.

## Keep Out/Interference Zones

Metallic and any other strong radar reflecting objects must remain outside of the keep out zones defined in Figure 10. If radar reflecting objects reside within the keep out zones, testing must be performed to determine their influence on the sensor's performance.

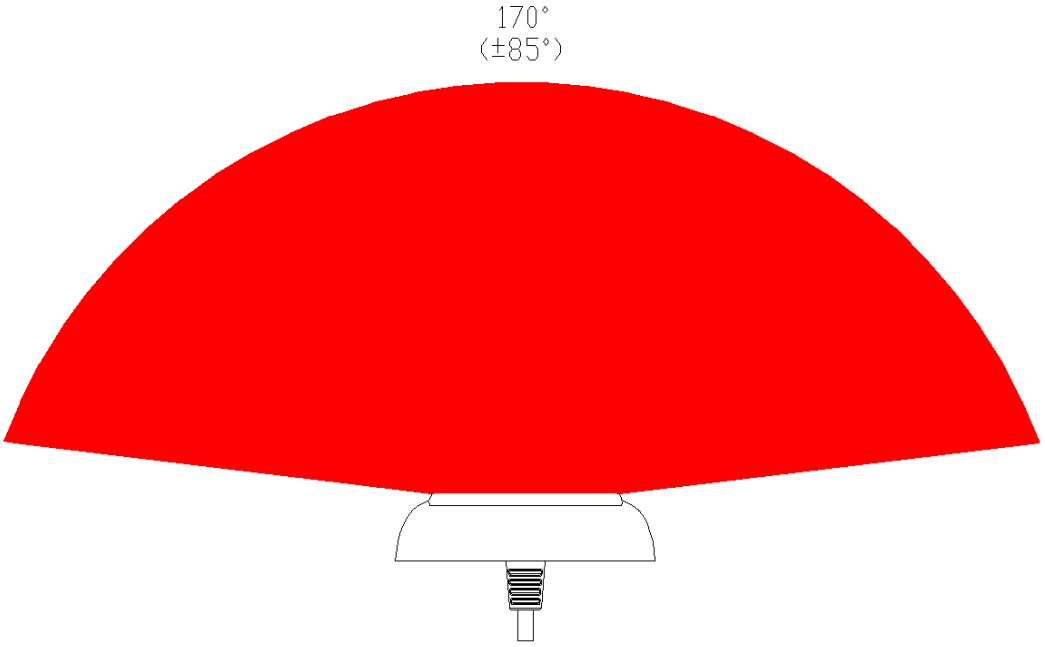


Horizontal “Keep Out” Zone

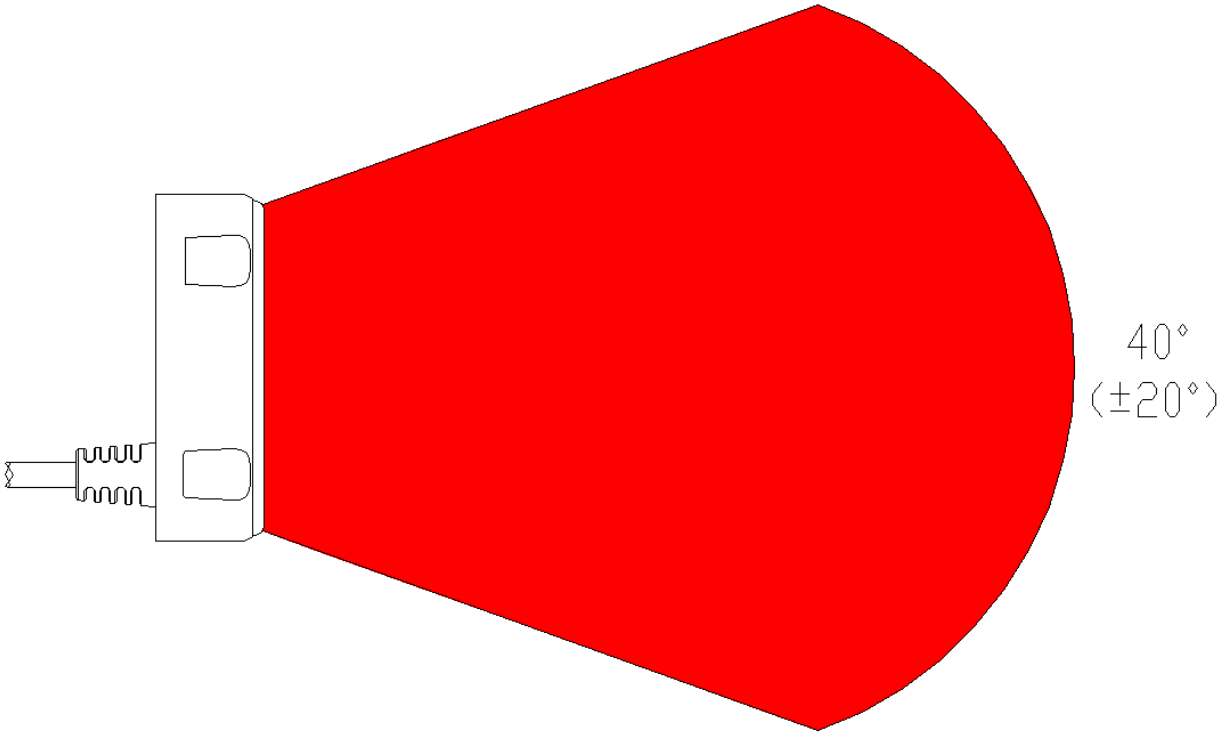


Vertical “Keep Out” Zone

**Figure 11. Keep Out Zones**

The sensor's horizontal field of view is +/- 75 degrees and the vertical field of view is +/- 10 degrees. For optimal performance, the sensor should protrude beyond any other portion of the vehicle.

**Important!**
Before permanently installing the PreView® Sentry™ radar sensor on the vehicle, verify that the selected sensor mounting location provides a clear detection zone. Take the machine to a clear area, temporarily attach the sensor in the proposed mounting location, apply power to the system, and verify that nothing is being detected.

## Sensor Mounting Procedure

Preco™ Electronics supplies a variety of brackets for the PreView® Sentry™ radar sensor. If the provided 90° bracket is not appropriate, an adjustable mounting bracket is available (see Figure 12 below).

If mounting directly to the vehicle, follow the procedure outlined below.

1. Select the appropriate sensor mounting location.
2. The standard mounting configuration is with the small end of the "V" graphic pointing down, as shown below.

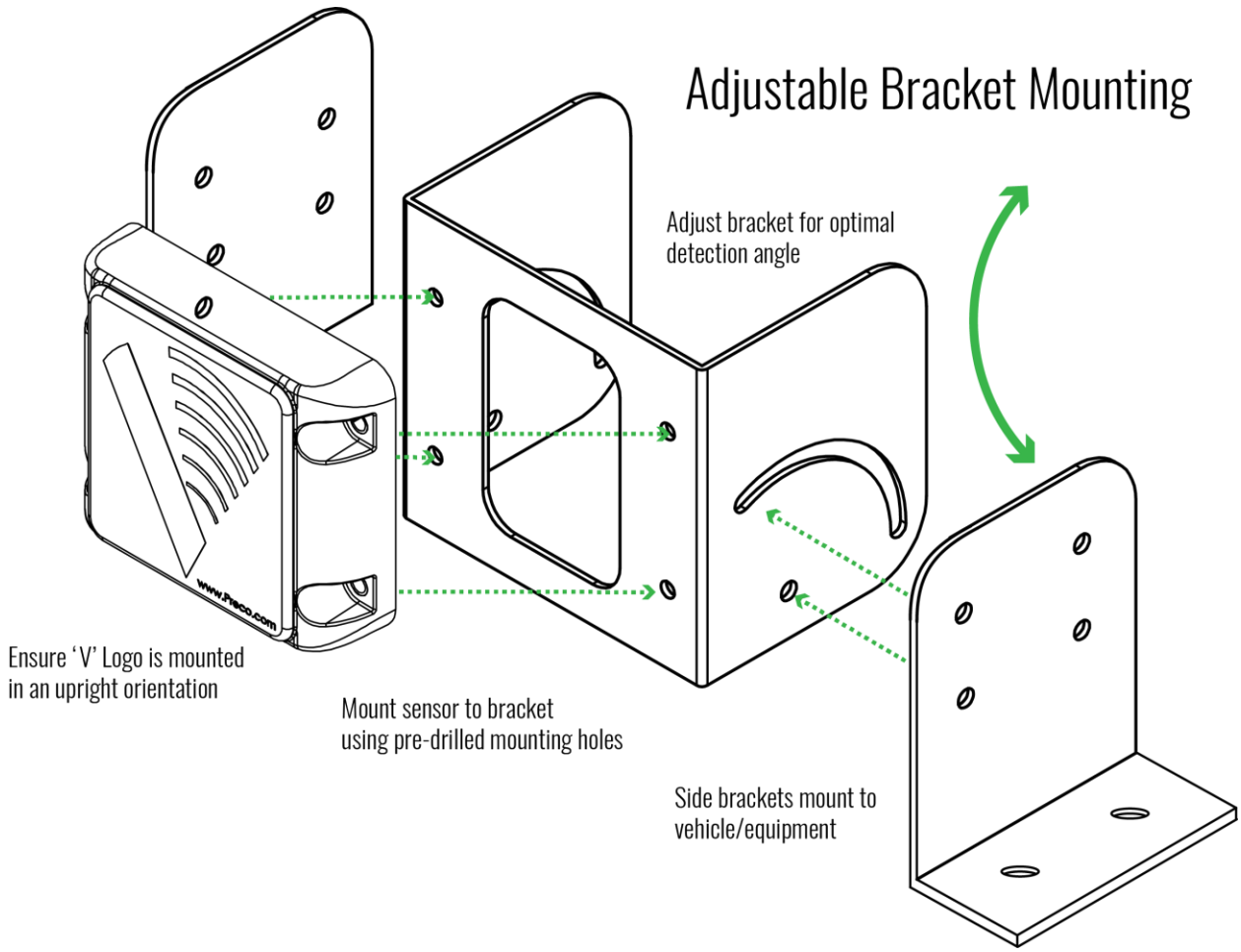


**Figure 12. Adjustable Mounting Bracket**

3. Using the provided drill template, scribe position marks through the holes. Drill 1/4" (6mm) holes centered at the marks.
4. A 1.5" (40mm) diameter clearance hole is required for the sensor connector and mating cable connector.
5. Secure the sensor to the vehicle with the four supplied #10-24 UNC button head screws, washers, and locking nuts or equivalent. Apply a maximum torque of 22 lb-inch (25 kg-cm) when securing the sensor.

## Initial System Power Up and Test

This is more of a system (Quick Start Guide) thing, but do we want to put it here as well?

## Object Detection Capability

**The PreView® Sentry™ system is a blind spot collision warning system designed to supplement other safety practices and/or devices. The machine operator is always the first line of defense when safely operating a vehicle. The person or owner responsible for the equipment must ensure that all operators understand the installation, operation, limitations and safe use of the system.**

The PreView® Sentry™ radar sensor can detect most objects within the detection zone. However, there are some instances where objects can go undetected. Obstacle size, shape, relative location, and composition are all factors determining if, when, and where an object is detected. The PreView® Sentry™ radar sensor operates by transmitting low power electromagnetic energy. Any energy that strikes an object reflects a certain amount of this energy back to the PreView® Sentry™ radar sensor. If the returned energy is of sufficient magnitude, it is used to indicate object presence and determine the object's distance. While the PreView® Sentry™ radar sensor can resolve multiple objects, only the object closest to the vehicle is reported to the operator display since it represents the most significant collision threat.

The amount of energy returned is based on a few factors:

**Size** – a larger object usually reflects more energy than a smaller object.

**Composition** – a metal object typically reflects more energy than a non-metallic object. A metallic object at the edge of the maximum detection zone might be detected, whereas a wood object may not.

**Scattering** – a solid object reflects more energy than a non-solid object such as tree branches, gravel, bushes, etc.

**Shape** – complex shapes cause energy to be returned in a very non-uniform way. Very small variations or movement can change detection status.

**Angle** – an object flat side perpendicular to the sensor will reflect more energy than an object at an angle. See below for an example of how angle can affect return energy.

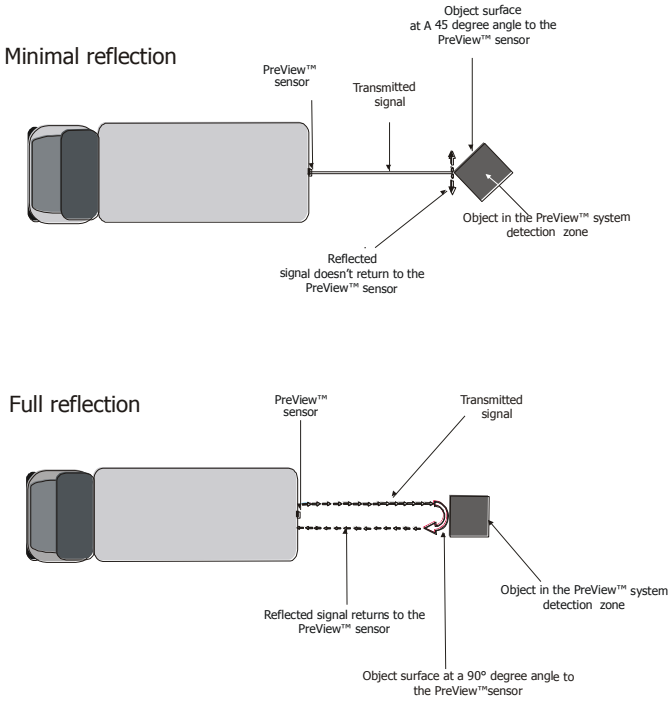


**Figure 13. Object Reflection**

# Notes on Safety and Risks

## Owner Responsibilities

*The owner is responsible for ensuring that the device (and equipment) are used for their intended purpose, for the actions of the employees, for giving instruction to the employees, and for the operational safety of the equipment. The owner must understand the safety information for the device and the instructions given in the operating manual.*

*Lacking or incomplete training can lead to incorrect operation or improper usage. This may result in accidents involving serious injury or damage to property, assets, or the environment.*

*Always make sure that the device or equipment is not operated, serviced, or used by personnel who have not been properly trained to do so.*

# PreView® Sentry™ Daily Maintenance

**Detach this page and place with daily operator maintenance procedures.**

## Safety Message to Operators of Vehicles with PreView® Sentry™ Systems

1. The PreView® Sentry™ system is intended as an Object Detection System and should not be relied upon as your first line of defense for the safe operation of the vehicle. It should be used in conjunction with established safety programs and procedures to augment the safe operation of the vehicle, ground personnel, and adjacent property. Should the system become inoperative, it could jeopardize the safety or lives of those who depend on the system for safety.
2. Testing and inspection of the system in accordance with these instructions and a record of the results should be listed on the daily maintenance report. The units on operating vehicles must be tested each day prior to the vehicle's operation. Results of this test must be recorded in the maintenance log.
3. People operating this equipment **MUST** check for proper operation at the beginning of every shift or safety inspection period.
4. If a PreView system is found to be inoperative upon test, the operator should flag or cover the driver display and mark as “inoperative” prior to the machine/vehicle operation.
5. People's lives depend on the proper installation of this product in conformance with these instructions. It is necessary to read, understand, and follow all instructions shipped with the product.
6. Failure to follow all safety precautions and instructions may result in property damage, serious injury, or death.
7. The PreView Object Detection System is intended for commercial use. Proper installation requires a good understanding of vehicle/machine electrical systems and procedures, along with proficiency in the installation.
8. Store these instructions in a safe place and refer to them when maintaining and/or reinstalling the product.

## Testing and Maintenance

NOTE: A walk-around test shall be performed every day to verify proper function of the system and to familiarize the operator with the zone of detection. More frequent inspections should be performed when:

- The vehicle is operating in a particularly dirty or harsh environment.
- The operator has reason to suspect the system has been damaged.

This test should be performed with two people, one who remains in the cab (the operator), and one who walks through the sensor detection field (the assistant). The below example illustrates the test for a backing sensor application. Use a similar procedure for front, side or multiple radar systems by confirming detection of each radar sensor in the operator display.

1. Clean the sensor face of any accumulation of dirt, mud, snow, ice, or debris.
2. Visually inspect the attached wiring and cable and verify that they are properly secured, not chafing or dangling free where they could become snagged and damaged. Inspect the Radar Sensor and Operator Display Module and verify that they are securely attached to the vehicle.
3. Set the park brakes, start the vehicle, depress and hold the vehicle brake, and place the vehicle in reverse.
4. Verify the green “POWER” light is illuminated on the in-cab display, or if using an in-cab video monitor, verify that the radar indicator is showing a green (operating) status.
5. The area to the rear of the vehicle should be clear of obstacles for a distance of 26.25 feet (8 meters). If the display shows any indicator other than the green light, then there are objects to the rear of the vehicle that will interfere with the test. Move the vehicle to a clear area and proceed.
6. The assistant should move to just behind the rear corner of the vehicle in sight of the operator's mirrors. He should then walk toward the centerline of the vehicle parallel to the rear, while the operator notes when the display buzzer sounds, signifying the sensor has detected the object.
7. The assistant should continue walking through the area at the rear of the vehicle while the operator notes the area where detection occurs.
8. Next, walk from the center of the rear of the vehicle straight back, away from the vehicle. When the display quits sounding, the detection limit has been reached.
9. Move halfway back and remain still for a few seconds. The display should continue to sound, demonstrating the system’s ability to detect a still object.

10. The assistant should walk the complete rear of the vehicle while the operator notes the detection edges of the entire coverage area.
11. After the test, the operator and the assistant need to communicate the details on the detection zone.

**For questions, call 1-866-977-7326 toll free in the USA, send a fax request to 1-866-929-6769, or submit an online request at www.preco.com/contact-us/ . A safety specialist will respond within 24 hours.**

# Warranty Information

MANUFACTURER STANDARD LIMITED WARRANTY AND LIMITATION OF LIABILITY

Manufacturer warrants that on the Date of Purchase this Product will conform to Manufacturer's published specifications for the product, which are available from Manufacturer on request, and Manufacturer warrants that the product is free from defects in materials and workmanship. This Limited Warranty for the sensor extends for sixty (60) months from the date of shipment. Manufacturer will, at its option, repair or replace any product found by Manufacturer to be defective and subject to this Limited Warranty.

This Limited Warranty does not apply to parts or products that are misused; abused; modified; damaged by accident, fire or other hazard; improperly installed or operated; or not maintained in accordance with the maintenance procedures set forth in Manufacturer's Installation and Operating Instructions.

To obtain warranty service, you must ship the product(s) to the specified Manufacturer location within thirty (30) days from expiration of the warranty period. To obtain warranty service, call Preco™ Customer Service at 866-977-7236 or 208-323-1000, or fax your request to 208-323-1034. Customer Service will issue warranty authorization and further instructions. You must prepay shipping charges and use the original shipping container or equivalent.

**EXCLUSION OF OTHER WARRANTIES**: MANUFACTURER MAKES NO OTHER WARRANTIES, EXPRESSED, IMPLIED OR STATUTORY. THE IMPLIED WARRANTIES FOR MERCHANTABILITY AND FITNESS FOR A PARTICULAR PURPOSE ARE HEREBY EXCLUDED AND SHALL NOT APPLY TO THE PRODUCT. BUYER'S SOLE AND EXCLUSIVE REMEDY IN CONTRACT, TORT OR UNDER ANY OTHER THEORY AGAINST MANUFACTURER RESPECTING THE PRODUCT AND ITS USE SHALL BE THE REPLACEMENT OR REPAIR OF THE PRODUCT AS DESCRIBED ABOVE.
**LIMITATION OF LIABILITY:** IN THE EVENT OF LIABILITY FOR DAMAGES ARISING OUT OF THIS LIMITED WARRANTY OR ANY OTHER CLAIM RELATED TO MANUFACTURER'S PRODUCTS, MANUFACTURER'S LIABILITY FOR DAMAGES SHALL BE LIMITED TO THE AMOUNT PAID FOR THE PRODUCT AT THE TIME OF ORIGINAL PURCHASE. IN NO EVENT SHALL MANUFACTURER BE LIABLE FOR LOST PROFITS, THE COST OF SUBSTITUTE EQUIPMENT OR LABOR, PROPERTY DAMAGE, OR OTHER SPECIAL, CONSEQUENTIAL OR INCIDENTAL DAMAGES BASED UPON ANY CLAIM FOR BREACH OF CONTRACT, NEGLIGENCE OR OTHER CLAIM, EVEN IF MANUFACTURER OR A MANUFACTURER'S REPRESENTATIVE HAS BEEN ADVISED OF THE POSSIBILITY OF SUCH DAMAGES.

Manufacturer shall have no further obligation or liability with respect to the product or its sale, operation and use, and Manufacturer neither assumes nor authorizes the assumption of any other obligation or liability in connection with such product.

This Limited Warranty gives you specific legal rights, and you may also have other legal rights, which vary, from state to state. Some states do not allow the exclusion or limitation of incidental or consequential damages, so the above exclusion or limitation may not apply to you.

Any oral statements or representations about the product, which may have been made by salesmen or Manufacturer representatives, do not constitute warranties. This Limited Warranty may not be amended, modified or enlarged, except by a written agreement signed by an authorized official of Manufacturer that expressly refers to this Limited Warranty.