EXHIBIT E

NOTE: DASSAULT ELECTRONIQUE IS TO BE REPLACED WITH THOMSON-CSF DETEXIS.

THOMSON-CSF DETEXIS took over the SATCOM activities from the formerly company DASSAULT ELECTRONIQUE.

FCC ID: OYAJETSAT

System Installation Manual

JETSAT

SATCOM AERO I AES

NOTE

IF ANY UNUSUAL OR SPECIAL SERVICE PROBLEMS ARISE, CONTACT DASSAULT ELECTRONIQUE.

Mailing address : DASSAULT ELECTRONIQUE
JETSAT SATCOM PRODUCT
55, Quai Marcel Dassault
92214 SAINT-CLOUD
FRANCE
"Dassault Electronique is a subsidiary of Thomson-CSF"

PROPRIETARY NOTICE

This document contains proprietary information and such information may not be disclosed to others for any purpose, not used for manufacturing purposes without written permission from DASSAULT ELECTRONIQUE.

RECORD OF REVISIONS

REV. NO.	REVISION DATE	DATE INSERTED	BY	REV. NO.	REVISION DATE	DATE INSERTED	BY

SERVICE BULLETIN LIST

The Service Bulletin listed below have been incorporated in this manual.

ATA NO. (D.E. NO.)	MANUAL REVISION NUMBER	MANUAL REVISION DATE	COVERAGE

LIST OF EFFECTIVE PAGES

SUBJECT	PAGE	DATE
Title Page	T1	Aug 19/99
Proprietary Notice	PN-1	Dec 3/98
Record of Revisions	RR-1	Dec 3/98
	RR-2	Blank
Service Bulletin List	SB-1	Dec 3/98
	SB-2	Blank
List of Effective Pages	LEP-1	Aug 19/99
	LEP-2	Aug 19/99
General Table of Contents	GTC-1	Dec 3/98
	GTC-2	Blank
Introduction	INTRO-1	Dec 3/98
	INTRO-2	Dec 3/98
	INTRO-3	Dec 3/98
	INTRO-4	Dec 3/98
	INTRO-5	Dec 3/98
	INTRO-6	Blank
Table of Contents	TC1-1	Dec 3/98
	TC1-2	Dec 3/98
List of Figures	LF1-1	Dec 3/98
	LF1-2	Dec 3/98
	1	Dec 3/98
	2	Dec 3/98
	3	Dec 3/98
	4	Blank
	5	Dec 3/98
	6	Dec 3/98
	7	Dec 3/98
	8	Dec 3/98
	9	Dec 3/98
	10	Dec 3/98
	11	Dec 3/98
	12	Dec 3/98
	13	Dec 3/98
	14	Dec 3/98
	15	Dec 3/98
	16	Blank
	17	Dec 3/98
	18	Blank
	19	Dec 3/98
	20	Blank
	21	Dec 3/98
	22	Blank
	23	Dec 3/98
	24	Dec 3/98
	25	Dec 3/98
	26	Dec 3/98
	27	Dec 3/98
	28	Dec 3/98
	29	Dec 3/98
	30	Dec 3/98
	31	Dec 3/98
	32	Blank
	33	Dec 3/98
	34	Blank
	35	Dec 3/98
	36	Blank
	37	Dec 3/98
	38	Dec 3/98
	39	Dec 3/98
	40	Dec 3/98
	41	Dec 3/98
	42	Dec 3/98
	43	Dec 3/98
	44	Dec 3/98
	45	Dec 3/98
	46	Dec 3/98
	47	Dec 3/98
	48	Dec 3/98
	49	Dec 3/98
	50	Dec 3/98
Table of Contents	TC100-1	Dec 3/98
	TC100-2	Dec 3/98
List of Figures	LF100-1	Dec 3/98
	LF100-2	Blank

SUBJECT	PAGE	DATE	SUBJECT	PAGE	DATE
	101	Dec 3/98	Table of	TC300-1	Dec 3/98
	102	Dec 3/98	Contents	TC300-2	Blank
	103	Dec 3/98			
	104	Dec 3/98	List of Figures	LF300-1	Dec 3/98
	105	Dec 3/98		LF300-2	Blank
	106	Dec 3/98			
	107	Dec 3/98		301	Dec 3/98
	108	Dec 3/98		302	Dec 3/98
	109	Dec 3/98		303	Dec 3/98
	110	Blank		304	Dec 3/98
	111	Dec 3/98			
	112	Dec 3/98	Table of	TC400-1	Dec 3/98
	113	Dec 3/98	Contents	TC400-2	Blank
	114	Blank			
	115	Dec 3/98		401	Dec 3/98
	116	Dec 3/98		402	Dec 3/98
	117	Dec 3/98			
	118	Dec 3/98	Table of	TC500-1	Dec 3/98
	119	Dec 3/98	Contents	TC500-2	Blank
	120	Dec 3/98			
	121	Dec 3/98		501	Dec 3/98
	122	Dec 3/98		502	Dec 3/98
	123	Aug 16/99			
	124	Dec 3/98	Appendix A	1	Dec 3/98
	125	Aug 16/99		2	Blank
	126	Dec 3/98			
	127	Dec 3/98	Appendix B	1	Dec 3/98
	128	Dec 3/98		2	Blank
	129	Dec 3/98			
	130	Blank	Appendix C	1	Dec 3/98
				2	Blank
Table of	TC200-1	Dec 3/98			
Contents	TC200-2	Dec 3/98	Appendix D	1	Dec 3/98
				2	Blank
	201	Dec 3/98			
	202	Dec 3/98	Appendix E	1	Dec 3/98
	203	Dec 3/98		2	Blank
	204	Dec 3/98			
	205	Dec 3/98	Appendix F	1	Dec 3/98
	206	Dec 3/98		2	Blank
	207	Dec 3/98			
	208	Dec 3/98	Appendix G	1	Dec 3/98
	209	Dec 3/98		2	Blank
	210	Dec 3/98			
	211	Dec 3/98	Appendix H	1	Dec 3/98
	212	Dec 3/98		2	Blank

GENERAL TABLE OF CONTENTS

Section/Title — Page

DESCRIPTION 1

INSTALLATION 101

SYSTEM CONFIGURATION 201

INSPECTION, SYSTEM CHECK OUT AND
COMMISSIONING TEST PROCEDURE 301

MAINTENANCE PROCEDURE 401

PACKAGING - STORAGE 501

INTRODUCTION

1. General

This manual applies to installation and maintenance of the airborne satellite communication system called JETSAT, manufactured by DASSAULT ELECTRONIQUE (D.E.).

JETSAT is a complete SATCOM solution from antenna to handsets and is designed to operate under the INMARSAT 3 satellite spot and global antenna beams. Five L_band full duplex communication channels provide for Cabin and Cockpit air-ground communications (telephone, fax, data link).

The installation manual pertains to the following JETSAT SATCOM system components and accessories :

- IGA,
- HLD,
- SDU,
- CTU,
- NRS,
- HANDSETS/ CRADDLE
- Accessories like HLD/SDU trays and harness.

Installation instructions are supported by mechanical and electrical interconnection drawings. These drawings are part of this document and should be reviewed by the installing agency. Any requirements peculiar to the particular airframe should be established before installation is begun.

2. Presentation of the manual

This manual is divided into separate sections and sub-sections as follows:

PRELIMINARY PAGES

- Title page
- Proprietary notice
- Record of revisions
- Service Bulletin list
- List of effective pages
- General table of contents
- Introduction
- Glossary

DESCRIPTION

This section contains a description of the system composition and the electrical equipment connection.

INSTALLATION

This section is an overview guide to the placement of the different components of JETSAT.

SYSTEM CONFIGURATION

INSPECTION, SYSTEM CHECK OUT AND
COMMISSIONING TEST PROCEDURE

MAINTENANCE PROCEDURE

PACKAGING - STORAGE

This section gives instructions to unpack and store the JETSAT components.

APPENDIX

Appendixes are composed of outline drawings.

3. Glossary

A	:	Ampere
ACARS	:	Aircraft Communication Addressing and Reporting System
ACU	:	Antenna Control Unit
ADL	:	Airborne Data Loader
AERO	:	AEROnautical
AES	:	Aircraft Earth Station
AFIS	:	Airborne Flight Information System
AMS	:	Audio Management System
APM	:	Aircraft Personality Module
ARINC	:	Aeronautical Radio Inc.
ATE	:	Automatic Test Equipment
ATSU	:	Air Traffic Services Unit
BPC	:	Bottom Plug Connector
CCS	:	Cabin Communication System
CEPT E1	:	Conference Européennes des administrations des Postes et Télécommunications
CFDS	:	Centralized Fault Display System
CMU	:	Communication Management Unit
CTU	:	Cabin Telecommunication Unit
CPDF	:	Cabin Packet-mode Data Function
dB	:	Decibel
DC	:	Direct Current
D.E.	:	DASSAULT ELECTRONIQUE
DLNA	:	Diplexer and Low Noise Amplifier

DTMF	:	Dual Tone Modulated Frequency
FANS	:	Future Air Navigation System
FMC	:	Flight Management Computer
GES	:	Ground Earth Station
GPS	:	Global Positioning System
Hz	:	Hertz
HLD	:	High power amplifier/Low noise amplifier/Diplexer
HPA	:	High Power Amplifier
ICAO	:	International Civil Aviation Organization
IGA	:	Intermediate Gain Antenna
IRS	:	Inertial Reference System
LCD	:	Liquid Crystal Display
LED	:	Light-Emitting Diode
LRU	:	Line Replaceable Unit
MCDU	:	Multi-Purpose Control and Display Unit
MCTU	:	Mini Cabin Telecommunication Unit
MCU	:	Modular Concept Unit
MPC	:	Middle Plug Connector
mW/cm^2	:	Milliwatt/square centimeter
N/A	:	Not Applicable
NRS	:	Navigation Reference System
NRU	:	Navigation Reference Unit
PC	:	Personal Computer
P/N	:	Part Number

RF	:	Radio Frequency
RFU	:	Radio Frequency Unit
RMP	:	Radio Management Panel
SATCOM	:	SATellite COMmunication
SCDU	:	Satellite Control Data Unit
SDU	:	Satellite Data Unit
S/N	:	Serial Number
TBD	:	To Be Defined
TPC	:	Top Plug Connector
V	:	Volt
W	:	Watt
WOW	:	Weight On Wheels

DESCRIPTION

TABLE OF CONTENTS

Page

1. General 1

   A. Purpose of equipment 1

   B. Equipment composition 1

      (1) The antenna 1
      (2) The two basic LRU's 2
      (3) Other devices 2

2. Equipment part numbers 5

3. System components characteristics 6

4. Environment conditions 7

   A. SDU, HLD and IGA environmental conditions 7

   B. CTU, NRU-F, handset environmental conditions 8

5. System interface 9

6. Equipment electrical connection 11

   A. System diagram 11

      (1) IGA/HLD coaxial cable 12
      (2) SDU/HLD coaxial cables 13
      (3) SDU/NRU-F cable (W4) 13
      (4) Power cables 13
      (5) Other cables 13

   B. Connectors 14

      (1) SDU rear connector 14
      (2) SDU front panel connector 24
      (3) HLD rear connector 26
      (4) CTU rear connector 30
      (5) CTU front panel connector 38
      (6) Digital handset connector 39
      (7) Analogue handset connector 40

C. Interwiring 41

(1) Cockpit functionalities.....41
(2) Cabin functionalities 43
(3) E-BAY functionalities.....46
(4) Others.....50

LIST OF FIGURES

Figure 1 - JETSAT system components 3
Figure 2 - Equipment part numbers 5
Figure 3 - System components characteristics 6
Figure 4 - SDU, HLD and IGA environmental conditions 7
Figure 5 - CTU, NRU-F, handset environmental conditions 8
Figure 6 - JETSAT general system interfaces 9
Figure 7 - JETSAT typical BIZJET interface 10
Figure 8 - JETSAT interconnection 11
Figure 9 - JETSAT interconnection cables 12
Figure 10 - Types of cables from the antenna to the HLD 12
Figure 11 - Types of cables from the SDU to the HLD 13
Figure 12 - SDU rear ARINC 600 connector 14
Figure 13 - SDU top plug connector layout 17
Figure 14 - SDU middle plug connector layout 21
Figure 15 - SDU bottom plug connector layout 23
Figure 16 - SDU front panel connector 24
Figure 17 - SDU front panel connector pin assignment 25
Figure 18 - HLD rear ARINC 600 connector 26
Figure 19 - HLD rear top plug connector 27
Figure 20 - HLD rear middle plug connector 28
Figure 21 - HLD rear bottom plug connector 29
Figure 22 - CTU rear ARINC 600 connector 30
Figure 23 - CTU rear top plug connector layout 33
Figure 24 - CTU rear middle plug connector layout 35

Figure 25 - CTU rear bottom plug connector layout.....37

Figure 26 - CTU front panel connector layout.....38

Figure 27 - CTU front panel connector pin assignment.....38

Figure 28 - Digital handset connector layout 39

Figure 29 - Digital handset connector pin assignment.....39

Figure 30 - Analogue WH10 type connector layout.....40

Figure 31 - Analogue WH10 type connector pin assignment 40

DESCRIPTION

1. General

This section contains descriptive information covering the Dassault Electronique (D.E.) SATCOM AERO I AES called JETSAT.

A. Purpose of equipment

JETSAT interfaces with onboard avionics and communication equipment to provide the aircraft with aeronautical and public communication services by transmitting and receiving L Band Signals to and from the INMARSAT third generation satellites. For this purpose the Inmarsat satellite constellation is connected to the ground public and private telecommunication networks through Ground-Earth Stations (GES) operated by service providers.

JETSAT has been designed to satisfy all onboard satellite communication needs (cabin and cockpit) including FANS operations.

JETSAT architecture optimises the onboard installation by minimizing the number of LRU's and simplifying the wiring. It enables a maximum installation flexibility with respect to LRU location constraints (see Fig. 1) for each aircraft type.

A complete JETSAT AES is composed of one antenna and two ARINC 600, 4-MCU size LRU's.

B. Equipment composition

(1) The antenna

The antenna is an Intermediate Gain Antenna (IGA) which has been specifically designed with significant additional gain margin thereby enbeding the DLNA to be integrated into the HLD LRU, far from the IGA. Thanks to the IGA gain margin, the HLD can be installed up to 15 m (49.2 – Feet) from the antenna and the antenna is given much more flexibility in its location on the aircraft body.

Note that the small size of the antenna element enables to mount the antenna on the top of the fuselage or on the top of the stabilizer under the A/C tail radome.

(2) The two basic LRU's

- The first LRU is the SDU which integrates the avionics interfaces, the Radio Frequency Unit (RFU), as well as direct connection for up to 4 analogue handsets.

- The second LRU is the HLD which integrates the functionalities of the High Power Amplifier (HPA), the Diplexer Low Noise Amplifier (DLNA) and the Antenna Control Unit (ACU).

(3) Other devices

As part of the JETSAT product, DASSAULT ELECTRONIQUE also offers:

- The integrated MCTU (Mini Cabin Telecommunication Unit option) which may be installed in the SDU to interface directly up to 32 digital handsets without needing an external CTU.

- The separate Cabin Telecom Units (CTU) : For large aircraft, these ARINC 600 4-MCU LRUs can connect up to 128 digital handsets to each CTU (Note that the CTUs can be chained to provide more handset connections).

- The Digital Handsets used with SDU MCTU option or separate CTU.

- The Analogue Handsets for direct SDU connection (max. 4).

- The NRS package : which includes the optimal NRU-F antenna module and the SDU NRU optional module to enable stand alone SATCOM operations with no need for position data from the A/C IRS.

Note : The Navigation and Reference integrated functions (using the NRU / Navigation Reference Unit option), provides JETSAT with the aircraft position and attitude information's, for autonomous or coldstart immediate operations.

All these units are intended for installation in all types of commercial transport and business aircraft.

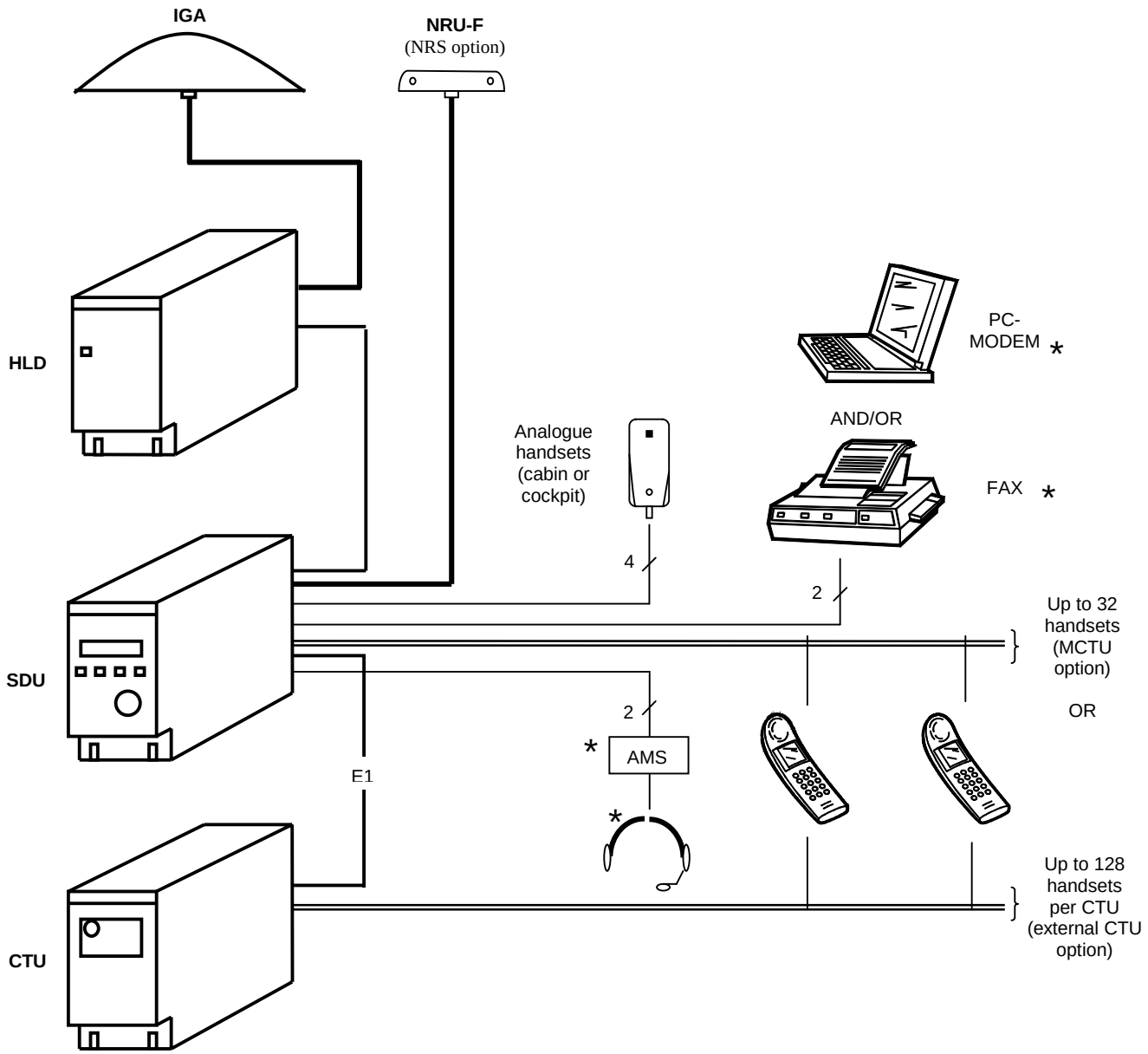

* Additional equipment not part of D.E. equipment package for JETSAT.

JETSAT system components

Figure 1

2. Equipment part numbers

JETSAT components are identified in the table below :

Component	P/N	P/N	P/N	Notes
Primary Power Supply	**NA**	**115V AC 400Hz**	**28V DC**	
SDU		3433-500-000	3433-500-010	
SDU/MCTU (up to 32 digital handset capacity)		3433-500-100	3433-500-110	Also request digital handsets
SDU/NRU		3433-500-200	3433-500-210	Also request NRU-F
SDU/MCTU/NRU (up to 32 digital handset capacity)		3433-500-300	3433-500-310	Also request NRU-F & Digital handsets
HLD		3433-300-000	3433-300-010	
CTU (up to 64 digital handset capacity)		3433-700-000		Only compatible with digital Handsets
CTU (up to 128 digital handset capacity)		3433-700-100		Only compatible with digital Handsets
IGA (top mounted)	3433-105-0xx			Several drillings and radius available
IGA (tail mounted)	3433-105-100			
Digital Handset (with cradle) Seat Mounted	3433-800-0xx			Also request SDU MCTU option or extr CTU
Digital Handset (with cradle) Bulkhead Mounted	3433-800-1xx			Also request SDU MCTU option or extr CTU
Analogue WH10 type handset	3433-800-500			Max possible SDU connection : 4
NRU-F (external antenna)	3433-600-000			SDU with NRU option required
IGA/HLD Low loss coaxial cable	3433-910-0xx			Several lengths available
Attenuators	3433-920-010 015 020			10 dB 15 dB 20 dB
SDU ARINC 600 Tray (4 MCU)	3433-900-000			Equipped with ARINC rear connector without air cooling module
HLD ARINC 600 Tray (4 MCU)	3433-900-010			Equipped with ARINC rear connector without air cooling module
CTU ARINC 600 Tray (4 MCU)	3433-900-020			Equipped with ARINC rear connector without air cooling module
28 V DC Air cooling module			3433-930-010	
115 V AC Air cooling module		3433-930-000		
S-LOOP Coupler box	3433-850-000			

Equipment part numbers

Figure 2

3. System components characteristics

The characteristics of JETSAT components are listed in the table hereafter :

Component	ARINC 600 MCU Size	Weight (kg/lbs)	Max. Power Consumption	Max. Power Dissipation (W)
SDU	4 (See Appendix D)	5/11	70 W 110 VA	55
SDU/MCTU	4 (See Appendix D)	5.2/11.5	100 W 153 VA	80
SDU/NRS	4 (See Appendix D)	5.2/11.5	70 W 110 VA	55
SDU/MCTU/NRS	4 (See Appendix D)	5.2/11.5	100 W 153 VA	80
HLD	4 (See Appendix C)	10/22	170 W 260 VA	150
CTU (64 handsets)	4 (See Appendix J)	5	40 W 64 VA	35
CTU (128 handsets)	4 (See Appendix J)	5.8	70 W 110 VA	60
IGA (top mounted)	See appendix A	4.5/9.9	N.A. (powered from HLD)	15
IGA (tail mounted)	See appendix B	2.2/4.6	N.A. (powered from HLD)	15
Digital Handset (with cradle)	See appendix G/H	0.45/1	N.A. (powered from MCTU or CTU)	0.5
Analogue WH10 type handset	See appendix F	0.63/1.4	2.5 W (28 V DC)	2.5
NRU-F (external antenna)	See appendix E	0.680/1.5	N.A. (powered by NRU/SDU)	2.5
28 V DC cooling module	N.A	TBD	TBD	N.A.
115 V AC cooling module	N.A.	TBD	TBD	N.A.

System components characteristics

Figure 3

4. Environment conditions

A. SDU, HLD and IGA environmental conditions

Environmental condition	RTCA/ED14D DO160D	SDU	HLD	IGA
Temperature altitude	4.0	A1	A1	E1
Temperature variation	5.0	B	B	A
Humidity	6.0	A	A	C
Operational chocks	7.0	B	B	A
Vibrations	8.0	SB	SB	E
Explosion proofness	9.0	X	X	X
Waterproofness	10.0	X	X	S
Fluid susceptibility	11.0	X	X	F
Sand and dust	12.0	X	X	D
Fungus resistance	13.0	X	X	F
Salt spray	14.0	X	X	S
Magnetic effect	15.0	A	A	A
Power input	16.0	E (115 V) Z (+ 28 V)	E (115 V) Z (+ 28 V)	X
Voltage spike	17.0	A	A	X
Audio frequency conducted susceptibility	18.0	E	E	X
Induced signal susceptibility	19.0	A	A	A
Radio frequency susceptibility	20.0	U	U	Y
Emission of radio frequency susceptibility	21.0	L	L	H
Lightning induced transient susceptibility	22.0	A2XX	A2XX	XXE3
Lightning direct effect	23.0	X	X	1B area
Icing	24.0	X	X	A
Electrostatic discharge	25.0	X	X	A

SDU, HLD and IGA environmental conditions

Figure 4

B. CTU, NRU-F, handset environmental conditions

Environmental condition	RTCA/ED14C DO160C	CTU	NRU-F	Digital handset
Temperature altitude	4.0	A1	D2	A1
Temperature variation	5.0	C	A	C
Humidity	6.0	A	C	A
Operational chocks	7.0	B	Yes 6G 3axes	Yes 6G 3axes
Vibrations	8.0	B	(C, L, Y)	C
Explosion proofness	9.0	X	X	X
Waterproofness	10.0	X	S	X
Fluid susceptibility	11.0	X	F	X
Sand and dust	12.0	X	D	X
Fungus resistance	13.0	X	F	X
Salt spray	14.0	X	S	X
Magnetic effect	15.0	A	X	Z
Power input	16.0	E	X	A
Voltage spike	17.0	A	X	B
Audio frequency conducted susceptibility	18.0	E	B	A
Induced signal susceptibility	19.0	A	A	Z
Radio frequency susceptibility	20.0	U	U, Y	T
Emission of radio frequency susceptibility	21.0	Z	A	Z
Lightning induced transient susceptibility	22.0	A2E1	K	X
Lightning direct effect	23.0	X	2AX area	X
Icing	24.0	X	X	X
Electrostatic discharge	25.0	X	X	X

CTU, NRU-F, handset environmental conditions

Figure 5

5. System interface

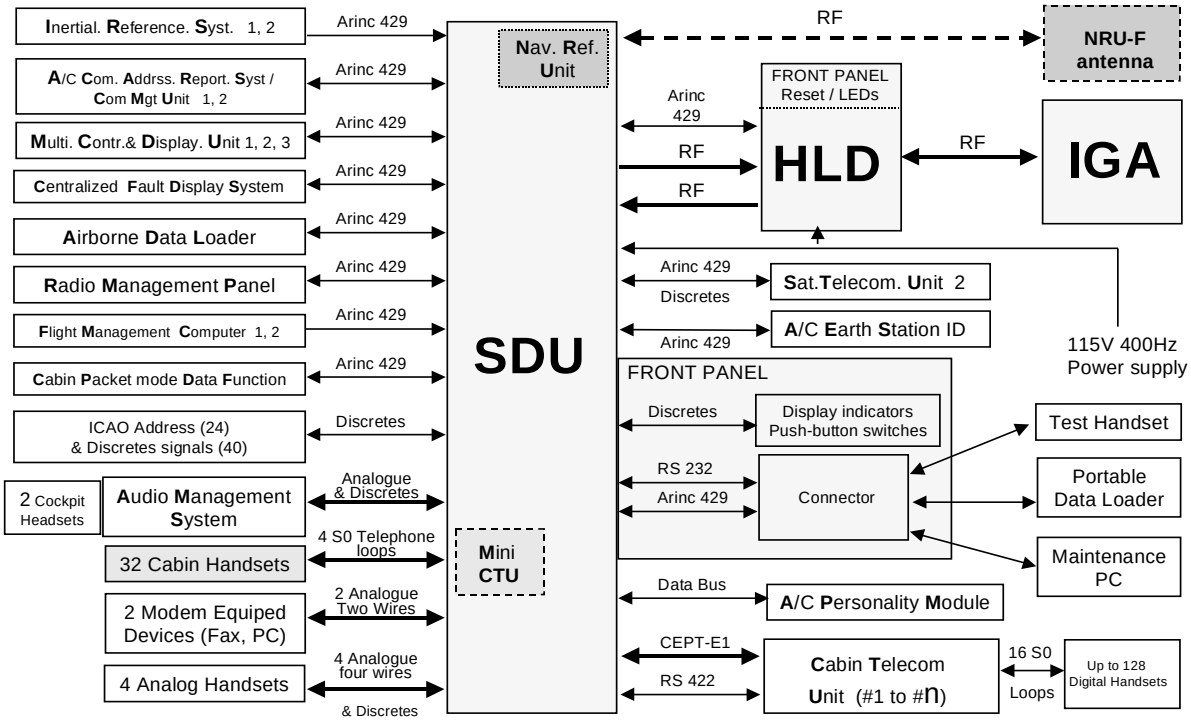

JETSAT general system interfaces

Figure 6

Cockpit functionalities
- 2 CMU/ACARS
- 3 MCDU
- 1 RMP
- 1 cockpit audio system

Cabin functionalities
- 1 CPDF
- Up to 4 analog handsets
- Up to 32 digital handsets (when MCTU option is installed)
- Up to 2 DTMF Fax/PC with modem devices
- 1 external CTU (via CEPT-E1 serial bus)

E BAY functionalities
- 2 IRS
- 1 CFDS (ARINC 604 and ABD048 compliant)
- 1 ADL
- 1 other SATCOM SDU (dual SATCOM operations)
- 2 FMC
- 64 discretes (ICAO address, WOW, Motion Sensor, …)
- APM device
- 2 ARINC 429 links HLD/SDU
- 2 RF coaxial cables HLD/SDU
- 1 RF coaxial cable HLD/IGA

Other functionalities
- 7 JETSAT Status Indicators
- 1 Maintenance Device, PC IBM compatible (RS232 port)
- 115 V/400 Hz Power Supply

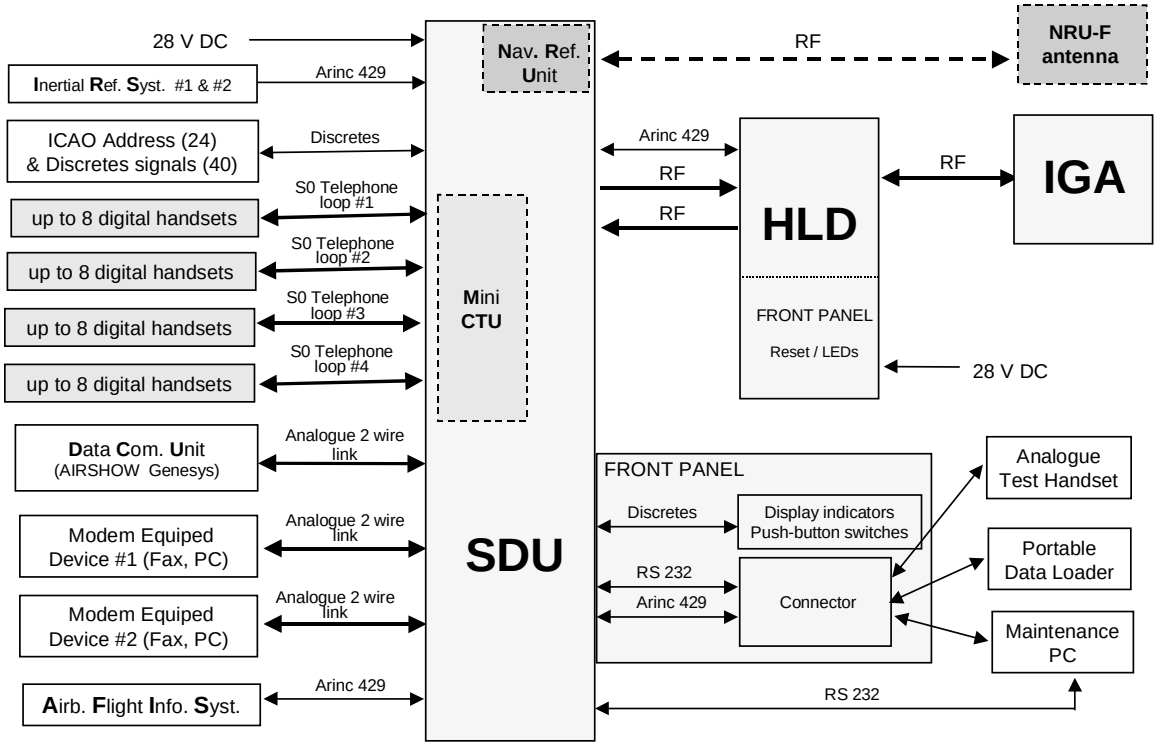

JETSAT typical BIZJET interface

Figure 7

- Up to 2 IRS,
- 64 discretes (ICAO address…),
- Up to 4 S0 telephone loop,
- 3 Analog links (DCU, Fax/PC with modem devices),
- 1 AFIS (Arinc 429),
- 2 ARINC 429 links connected to HLD,
- JETSAT Status Indicators,
- 1 Maintenance Device, PC IBM compatible (RS232 port),

and:

- 2 ARINC 429 links HLD/SDU,
- 2 RF coaxial cables HLD/SDU,
- 1 RF coaxial cable HLD/IGA.

Note : Power supply is 28 V DC.

6. Equipment electrical connection

A. System diagram

The system interconnection diagram is given below. It illustrates the cables needed to connect the different JETSAT components, not including terminal equipment such as fax, data terminal.

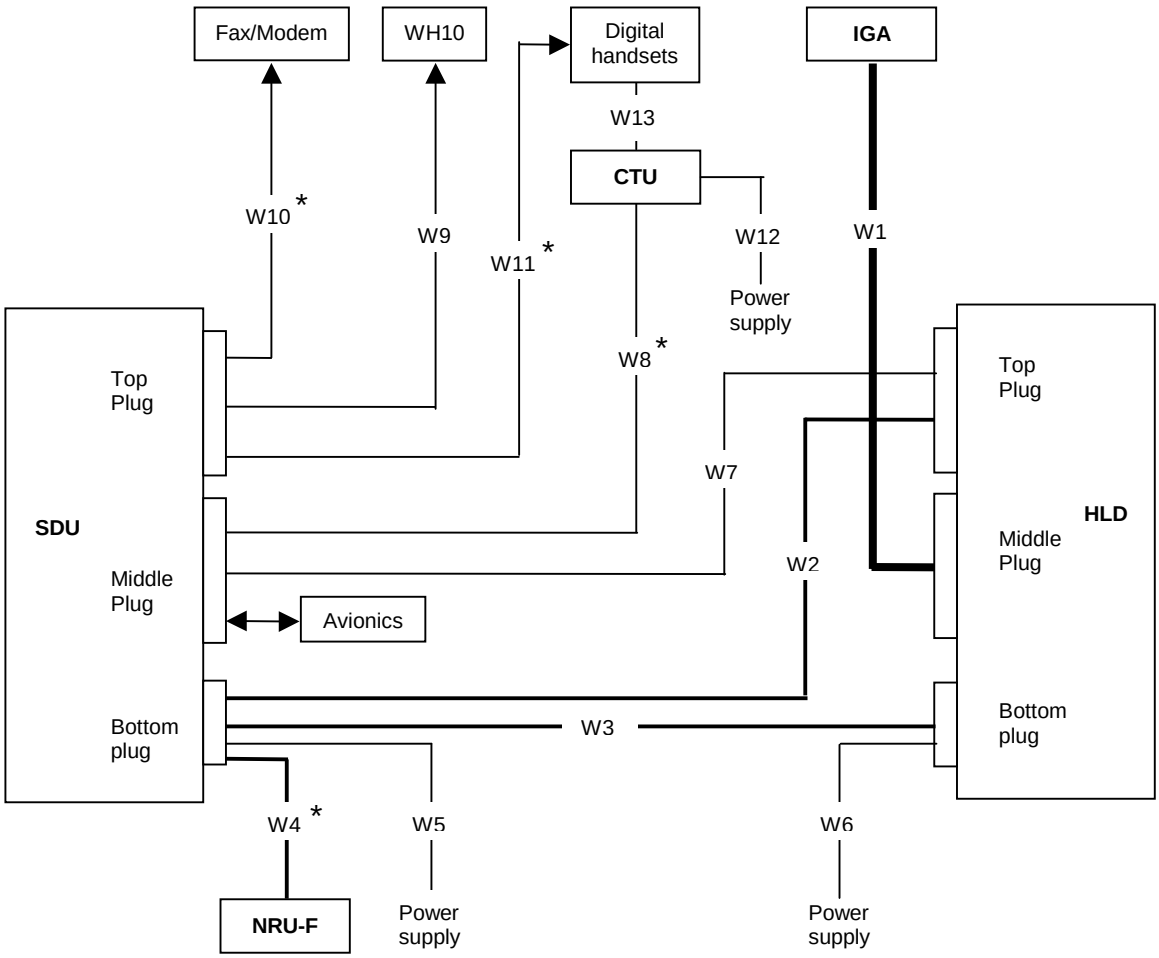

* Option cables.

JETSAT interconnection

Figure 8

Eleven different cables can be identified in the JETSAT interconnection diagram :

Id	Left hand connector	Right hand connector	Cable type
W1	N MALE	HLD, NTPC1, Size 1	50 ohm, L_band low loss coaxial cable.
W2	SDU, BPC12, Size 5	HLD, NTPC1, Size 1	50 ohm, L_band standard coaxial cable (Tx).
W3	SDU, BPC13, Size 1	HLD, BP12, Size 5	50 ohm, L_band standard coaxial cable (Rx).
W4	SDU, BPC10, Size 16	TNC MALE	50 ohm, L_band standard coaxial cable.
W5	SDU, BPC	None	3 core power (cold, hot, case ground)
W6	None	HLD, BPC	3 core power cold, hot, case ground)
W7	SDU, MPC	HLD, TPC	2 x 2 cores twisted and shielded 24 AWG
W8	SDU, MPC	CTU, TPC	2 x 2 cores twisted and shielded 24 AWG
W9	SDU, TPC	SGM20FSCESS Per handset	2 x 2 cores twisted and shielded 24 AWG plus 2 cores 24 AWG per handset
W10	SDU, TPC	Depends on equipment used (one per equipment)	2 cores twisted and shielded 24 AWG per equipment
W11	SDU, TPC	Switchcraft TA4F per handset	2 x 2 cores twisted and shielded 24 AWG per handset
W12	CTU, BPC	None	3 core power cold, hot, case ground).
W13	CTU, TPC, MPC	Switchcraft TA4F per handset	2 x 2 cores twisted and shielded 24 AWG per handset

JETSAT interconnection cables

Figure 9

(1) IGA/HLD coaxial cable (W1)

The coaxial cable from the antenna to the HLD (W1) must be a low loss cable. The maximum loss cable is 1.4 dB (within the SATCOM band 1530 to 1660.5 MHz), DC-resistance (shield and centre conductor total) should be not greater than 0.7 ohm.

Possible W1 cable types are listed below :

Supplier	Loss dB/metre	Radius of curvature	Diameter	Maximum length at 1.4 dB
ALPEN B0149	0.09	9 cm (3.5 inch)	1.63 cm (0.64 inch)	15.5 m (52 ft)
ANDREW L0F4	0.11	5 cm (1.96 inch)	1.6 cm (0.63 inch)	12.7 m (42 ft)
ECS 310801	0.15	5.7 cm (2.24 inch)	1.14 cm (0.45 inch)	9.3 m (31 ft)

Types of cables from the antenna to the HLD

Figure 10

Equivalent cables from other manufacturers can be used, provided the 1.4 dB losses and 0.7 ohm specifications are respected.

(2) SDU/HLD coaxial cables (W2, W3)

The coaxial cables from the SDU to the HLD (W2 and W3) must comply with the following general specifications.

- Maximum Losses
  (within the SATCOM band 1530 to 1660.5 MHz) = 25 dB.

Possible W2/W3 cable types are listed below :

Supplier	Loss dB/m	Diameter	Possible length at 25 dB
RAYCHEM 5020A3311	0.8	4.3 mm (0.17 inch)	31 m (103 ft)
RAYCHEM 5012A3311	0.57	8.6 mm (0.35 inch)	44 m (147 ft)
PIC 33141	0.28	6.9 mm (0.27 inch)	89 m (297 ft)
ECS 311201	0.3	8.2 mm (0.32 inch)	83 m (277 ft)

Types of cables from the SDU to the HLD

Figure 11

Equivalent cables from other manufacturers can be used provided the total loss specifications are respected.

(3) SDU/NRU-F cable (W4)

Coaxial cable from the SDU to the NRU-F, is a 50 Ohm, L-band standard coaxial cable equipped with a TNC male connector.

(4) Power cables (W5, W6, W12)

The power cables must be able to handle :

- W5 : SDU : 115 V AC/1.5 A. The recommended size is 20 AWG or 28 V DC/5 A. The recommended size is 16 AWG.
- W6 : HLD : 115 V AC/2 A. The recommended size is 20 AWG or 28 V DC/8 A. The recommended size is 16 AWG.
- W12 : CTU : 115 V AC/1.5 A. The recommended size is 20 AWG or 28 V DC/5 A. The recommended size is 16 AWG.

(5) Other cables

W9, W10, W11, W13 cables : maximum length = 50 m (167 ft)

B. Connectors

This chapter details the connectors of JETSAT components.

(1) SDU rear connector

RADIALL type connector **NSX G 2**R **201** YB 00 -- or equivalent (mating connector : RADIALL **NSX N 2P 201** S 00 -- or equivalent).

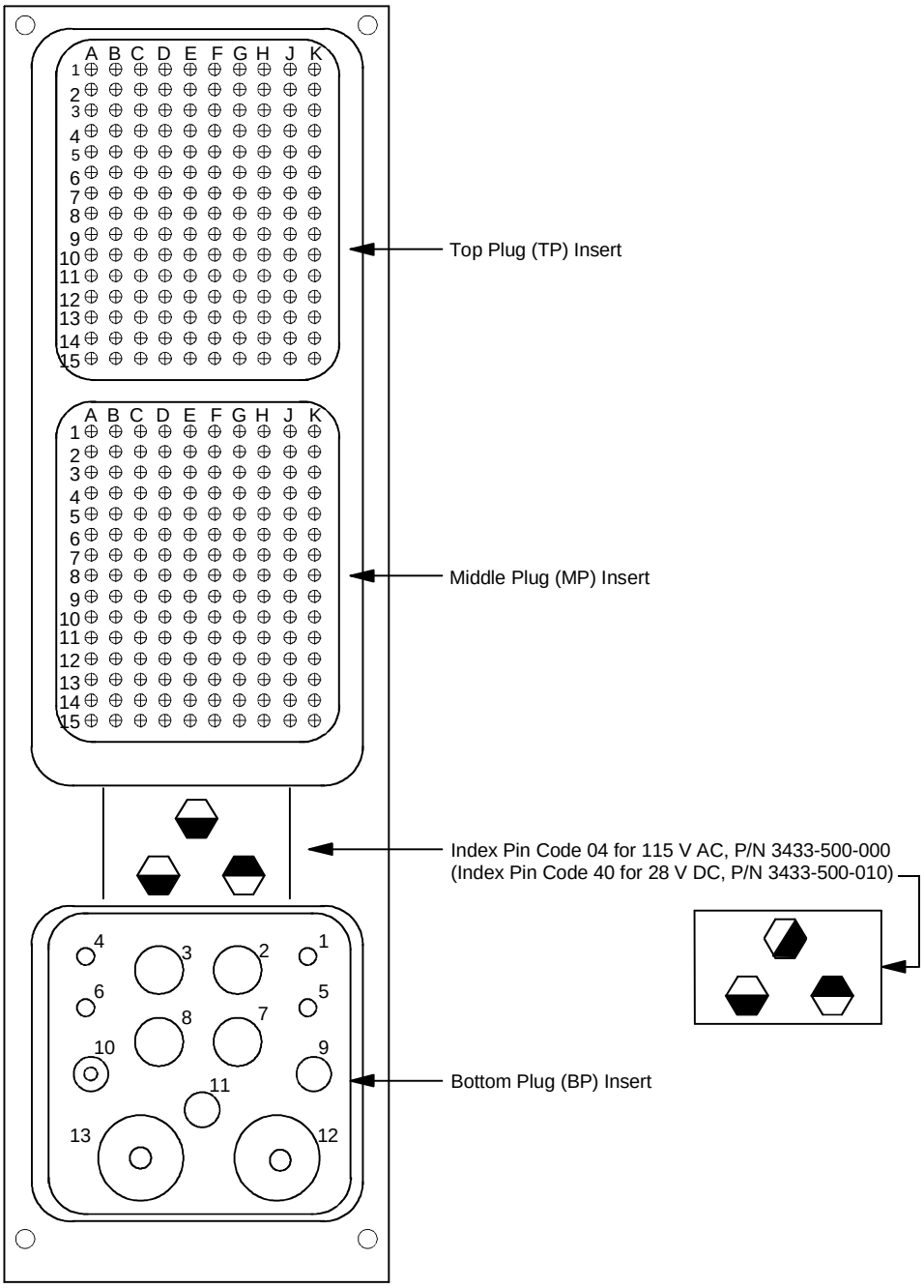

SDU rear ARINC 600 connector

Figure 12

Pin assignment :

(a) SDU rear top plug connector

The top plug connector allows to connect the following :

- Up to 4 WH10 type handsets,
- Up to 32 digital handsets (when MCTU option is installed),
- Up to 2 DTMF Fax/PC with modem devices,
- 7 JETSAT Status Indicators,
- 1 Maintenance Device, PC IBM compatible (RS232 port),
- 39 strap option discretes (JETSAT configuration),
- An APM device.

	A	B	C	D	E	F	G	H	J	K
1	WH10_1 HOOK_1	WH10_2 HOOK_2	WH10_1 BUZER_1_A	WH10_1 BUZER_1_B	WH10_2 BUZER_2_A	WH10_2 BUZER_2_B	DISCRETE OUTPUT O_SYSFAIL_F	AUDIO NON CCS	DISCRETE OUTPUT O_NOLINK_F	AUDIO NON CCS
2										
3	DISCRETE OUTPUT O_NOCOKPIT_F	DISCRETE OUTPUT O_NOCABIN_F	DISCRETE OUTPUT O_NODATA_F	DISCRETE OUTPUT O_PMLOWSPE_F	DISCRETE OUTPUT O_NOSATCOM_F	BI_FILAIRE FAX/MODEM IO_FAXMODRI1	BI_FILAIRE FAX/MODEM IO_FAXMODTI1	BI_FILAIRE FAX/MODEM IO_FAXMODRI2	BI_FILAIRE FAX/MODEM IO_FAXMODTI2	
4	APM O_APMPOW_H	APM O_APMPOW_L	APM O_APMCLOCK	APM I_APMDATA	APM O_APMDATA	APM O_APMWRIT1	APM O_APMWRIT2	APM O_APMENAB1	APM O_APMENAB2	DISCRETE INPUT I_E1RELAY
5	S0 LOOP N°1 O_1S0TXP_F	S0 LOOP N°1 O_1S0TXN_F	S0 LOOP N°1 I_1S0RXP	S0 LOOP N°1 I_1S0RXN	S0 LOOP N°1 1SOSLD	S0 LOOP N°2 O_2S0TXP_F	S0 LOOP N°2 O_2S0TXN_F	S0 LOOP N°2 I_2S0RXP	S0 LOOP N°2 I_2S0RXN	S0 LOOP N°2 2SOSLD
6	SPARE 429 INPUT I_SPA1_A	SPARE 429 INPUT I_SPA1_B	SPARE 429 OUTPUT O_SPA1_A_F	SPARE 429 OUTPUT O_SPA1_B_F	S0 LOOP N°3 O_3S0TXP_F	S0 LOOP N°3 O_3S0TXN_F	S0 LOOP N°3 I_3S0RXP	S0 LOOP N°3 I_3S0RXN	S0 LOOP N°3 3SOSLD	S0 LOOP N°4 O_4S0TXP_F
7	S0 LOOP N°4 O_4S0TXN_F	S0 LOOP N°4 I_4S0RXP	S0 LOOP N°4 I_4S0RXN	S0 LOOP N°4 4SOSLD	WH10_3 HOOK_3	WH10_3 BUZER_3_A	WH10_3 BUZER_3_B	WH10_3 I_WH10_3_H	WH10_3 I_WH10_3_L	WH10_3 O_WH10_3_H
8	WH10_3 O_WH10_3_L	WH10_4 HOOK_4	WH10_4 BUZER_4_A	WH10_4 BUZER_4_B	WH10_4 I_WH10_4_H	WH10_4 I_WH10_4_L	WH10_4 O_WH10_4_H	WH10_4 O_WH10_4_L		
9	SPARE STRAP INPUT I_SPARE1	SPARE STRAP INPUT I_SPARE2					RS422 INPUT I_CTURXP	RS422 INPUT I_CTURXM	RS422 OUTPUT O_CTUTXP_F	RS422 OUTPUT O_CTUTXM_F
10	STRAP OPTION I_STROPTIO1	STRAP OPTION I_STROPTIO2	STRAP OPTION I_STROPTIO3	STRAP OPTION I_STROPTIO4	STRAP OPTION I_STROPTIO5	STRAP OPTION I_STROPTIO6	STRAP OPTION I_STROPTIO7	STRAP OPTION I_STROPTIO8	STRAP OPTION I_STROPTIO9	STRAP OPTION I_STROPTIO10
11	STRAP OPTION I_STROPTIO11	STRAP OPTION I_STROPTIO12	STRAP OPTION I_STROPTIO13	STRAP OPTION I_STROPTIO14	STRAP OPTION I_STROPTIO15	STRAP OPTION I_STROPTIO16	STRAP OPTION I_STROPTIO17	STRAP OPTION I_STROPTIO18	STRAP OPTION I_STROPTIO19	STRAP OPTION I_STROPTIO20
12	STRAP OPTION I_STROPTIO21	STRAP OPTION I_STROPTIO22	STRAP OPTION I_STROPTIO23		STRAP OPTION I_STROPTIO24	STRAP OPTION I_STROPTIO25	STRAP OPTION I_STROPTIO26	STRAP OPTION I_STROPTIO27	STRAP OPTION I_STROPTIO28	STRAP OPTION I_STROPTIO29
13	STRAP OPTION I_STROPTIO30	STRAP OPTION I_STROPTIO31	STRAP OPTION I_STROPTIO32	STRAP OPTION I_STROPTIO33	STRAP OPTION I_STROPTIO34	STRAP OPTION I_STROPTIO35	STRAP OPTION I_STROPTIO36	STRAP OPTION I_STROPTIO37	STRAP OPTION I_STROPTIO38	STRAP OPTION I_STROPTIO39
14	RS232 I_RXD	RS232 O_TXD_F	RS232 LOGIC_GND							
15										

SDU top plug connector layout

Figure 13

(b) SDU rear middle plug connector

The middle plug connector allows to connect all avionics equipment, as follows :

- 2 IRS,
- 1 CPDF,
- 2 CMU/ACARS (or AFIS),
- 3 MCDU,
- 1 CFDS (ARINC 604 and ABD048 compliant),
- 1 ADL,
- 1 other SATCOM SDU (dual SATCOM operations),
- 1 equipment providing serial AES ID information,
- 64 discretes (ICAO address, WOW, Motion Sensor, …).

and :

- 2 ARINC 429 links connected to the HLD,
- 1 cockpit audio system (ARINC 761 compliant),
- 1 external CTU (via CEPT-E1 serial bus).

	A	B	C	D	E	F	G	H	J	K
1	WH10_1 I_WH10_1_H	WH10_1 I_WH10_1_L	WH10_1 O_WH10_1_H	WH10_1 O_WH10_1_L	ARINC 429 INPUT I_CPDF_A	ARINC 429 INPUT I_CPDF_B	ARINC 429 INPUT I_CMU1_A	ARINC 429 INPUT I_CMU1_B	ARINC 429 OUTPUT O_CMU12_A_F	ARINC 429 OUTPUT O_CMU12_B_F
2	AUDIO BI-FILAIRE INPUT I_AUDIO1_H	AUDIO BI-FILAIRE INPUT I_AUDIO1_L	AUDIO BI-FILAIRE OUTPUT O_AUDIO1_H_F	AUDIO BI-FILAIRE OUTPUT O_AUDIO1_L_F	AUDIO BI-FILAIRE INPUT I_AUDIO2_H	AUDIO BI-FILAIRE INPUT I_AUDIO2_L	AUDIO BI-FILAIRE OUTPUT O_AUDIO2_H_F	AUDIO BI-FILAIRE OUTPUT O_AUDIO2_L_F	CEPT-E1 INPUT I_CEPTE1_A	CEPT-E1 INPUT I_CEPTE1_B
3	CEPT-E1 OUTPUT O_CEPTE1_A_F	CEPT-E1 OUTPUT O_CEPTE1_B_F	ARINC 429 INPUT I_MCDU1_A	ARINC 429 INPUT I_MCDU1_B	ARINC 429 INPUT I_MCDU2_A	ARINC 429 INPUT I_MCDU2_B	ARINC 429 INPUT I_CMU2_A	ARINC 429 INPUT I_CMU2_B	ARINC 429 OUTPUT O_MCDU123_A_F	ARINC 429 OUTPUT O_MCDU123_B_F
4	ARINC 429 INPUT I_AESID_A	ARINC 429 INPUT I_AESID_B	ARINC 429 INPUT I_CFDS_A	ARINC 429 INPUT I_CFDS_B	ARINC 429 OUTPUT O_CFDS_A_F	ARINC 429 OUTPUT O_CFDS_B_F	ARINC 429 OUTPUT O_MC_A_F	ARINC 429 OUTPUT O_MC_B_F	WH10_2 I_WH10_2_H	WH10_2 I_WH10_2_L
5		DISCRETE INPUT I_WOW1	SPARE DISCRETE INPUT I_WOW2	DISCRETE INPUT I_WOWPS_F	WH10_2 O_WH10_2_H	WH10_2 O_WH10_2_L		DISCRETE I_CHIM_LAM	DISCRETE IO_DSSD_F	DISCRETE I_DSSD
6	ARINC 429 INPUT I_IRS1_A	ARINC 429 INPUT I_IRS1_B	ARINC 429 INPUT I_IRS2_A	ARINC 429 INPUT I_IRS2_B	ARINC 429 INPUT I_BITEHPA_A	ARINC 429 INPUT I_BITEHPA_B				
7	ARINC 429 INPUT I_ADL_A	ARINC 429 INPUT I_ADL_B	ARINC 429 OUTPUT O_ADL_A_F	ARINC 429 OUTPUT O_ADL_B_F					ARINC 429 SPARE INPUT I_SPA2_A	ARINC 429 SPARE INPUT I_SPA2_B
8	DISCRETE INPUT I_ADLL_A	DISCRETE INPUT I_ADLL_B	ARINC 429 INPUT I_RMP_A	ARINC 429 INPUT I_RMP_B	DISCRETE OUTPUT O_LIGHT1_F	DISCRETE I_MICON1	DISCRETE OUTPUT O_LIGHT2_F	DISCRETE INPUT I_MICON2	ARINC 429 INPUT I_MCDU3_A	ARINC 429 INPUT I_MCDU3_B
9	ARINC 429 OUTPUT O_CPDF_A_F	ARINC 429 OUTPUT O_CPDF_B_F	ARINC 429 OUTPUT O_RMP_A_F	ARINC 429 OUTPUT O_RMP_B_F						
10										
11	DISCRETE INPUT I_MS	DISCRETE INPUT I_SPS	DISCRETE INPUT I_ENDCALL1	DISCRETE INPUT I_ENDCALL2						
12	ARINC 429 INPUT I_CROSS_A	ARINC 429 INPUT I_CROSS_B	ARINC 429 OUTPUT O_CROSS_A_F	ARINC 429 OUTPUT O_CROSS_B_F			ARINC 429 INPUT I_FMC1_A	ARINC 429 INPUT I_FMC1_B	ARINC 429 INPUT I_FMC2_A	ARINC 429 INPUT I_FMC2_B
13	DISCRETE OUTPUT O_SPARE1_F		DISCRETE ICAO I_ICA01	DISCRETE ICAO I_ICA02	DISCRETE ICAO I_ICA03	DISCRETE ICAO I_ICA04	DISCRETE ICAO I_ICA05	DISCRETE ICAO I_ICA06	DISCRETE ICAO I_ICA07	DISCRETE ICAO I_ICA08
14	CHIME RESET I_CHIMRST	CHIME SIGNAL 1 O_CHIME_F	CHIME SUGNAL 2 I_CHIME	DISCRETE ICAO I_ICA09	DISCRETE ICAO I_ICA010	DISCRETE ICAO I_ICA011	DISCRETE ICAO I_ICA012	DISCRETE ICAO I_ICA013	DISCRETE ICAO I_ICA014	DISCRETE ICAO I_ICA015
15	DISCRETE ICAO I_ICA016	DISCRETE ICAO I_ICA017	DISCRETE ICAO I_ICA018	DISCRETE ICAO I_ICA019	DISCRETE ICAO I_ICA020	DISCRETE ICAO I_ICA021	DISCRETE ICAO I_ICA022	DISCRETE ICAO I_ICA023	DISCRETE ICAO I_ICA024	ICAO COMMON ADDRESSE ICAOCOM

SDU middle plug connector layout

Figure 14

(c) SDU rear bottom plug connector

The bottom plug connector permits to connect the required power supply (115V AC 400 Hz or 28 V DC) and the 2 RF coaxial cables to be connected to the HLD.

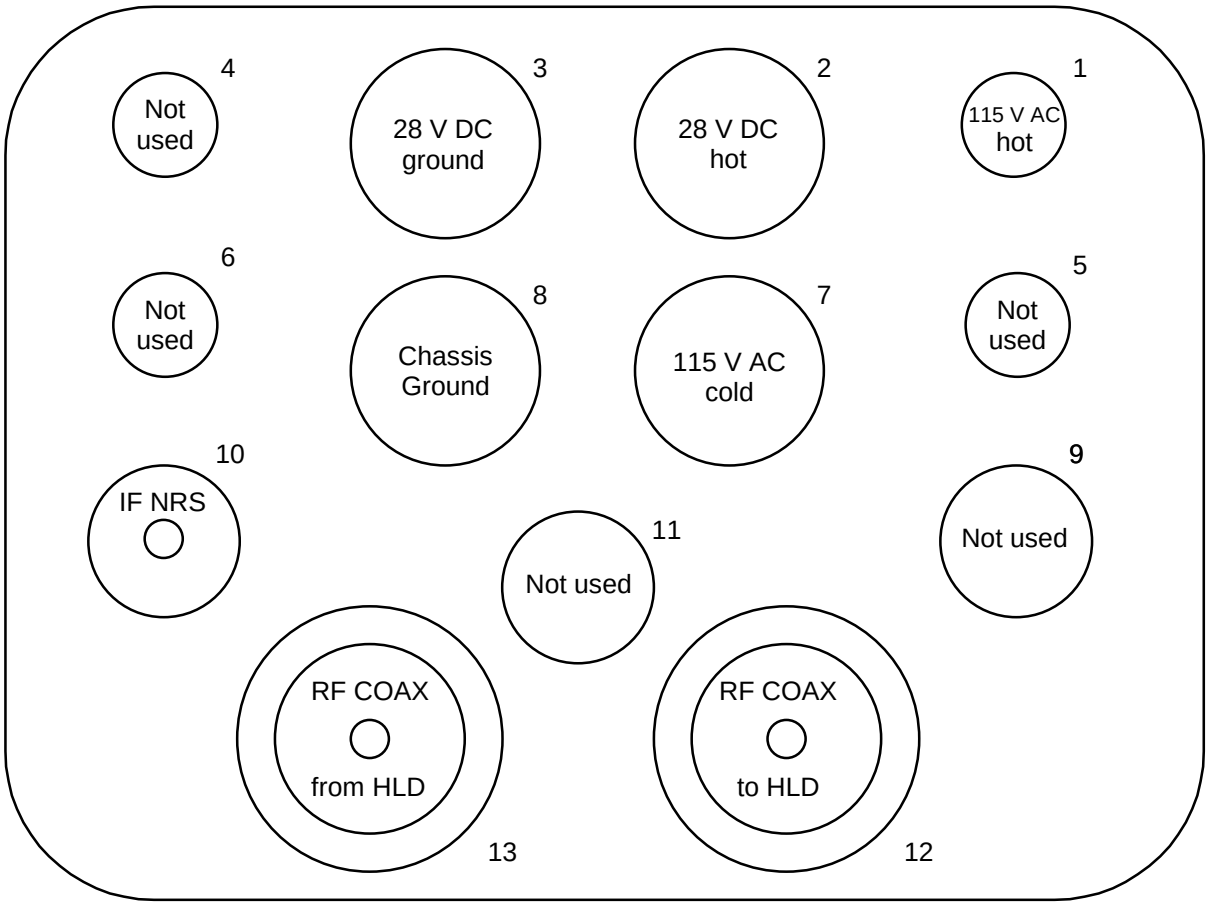

SDU bottom plug connector layout

Figure 15

(2) SDU front panel connector

The front panel connector permits to connect :

- One analogue test headset (for commissioning and maintenance operations),
- A Portable Data Loader.
- An IBM compatible P.C. equipped with the JETSAT maintenance and commissioning software package.

AMPHENOL type connector MS 27508E-18A-53S and protective cap MS 27511-A18C (mating connector : AMPHENOL type connector MS 27473T-18A-53P or equivalent).

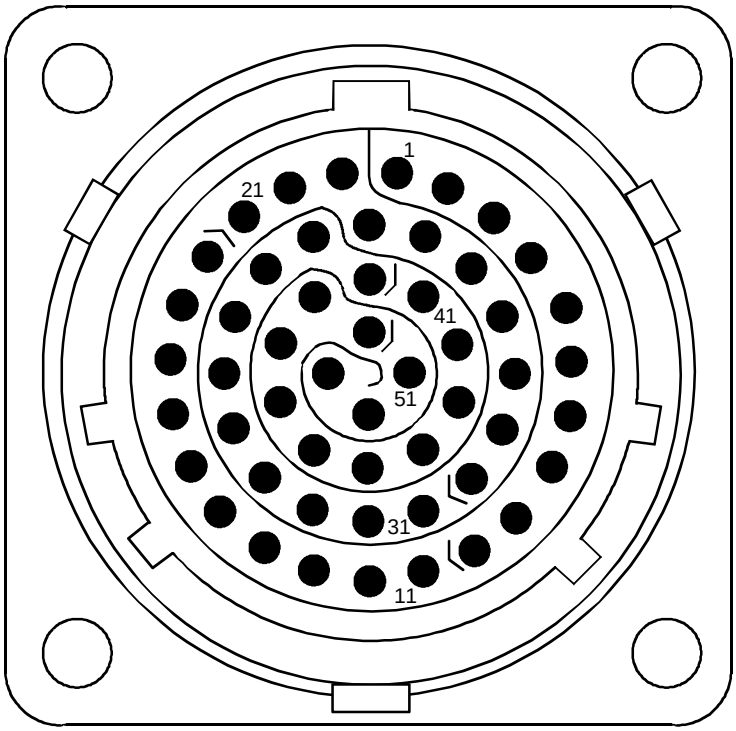

SDU front panel connector

Figure 16

PIN NUMBER	NAME	FUNCTION
1	I_PDL_A	A Receive Data Bus Input #1 (ARINC 429)
2	I_PDL_B	B Receive Data Bus Input #1 (ARINC 429)
5	I_SHIELD	Input Bus Shields
6	I_THAUDIOLO	Test Handset Audio Input LO
7	I_THAUDIOHI	Test Handset Audio Input HI
8	O_PDL_A	A Transmit Data Bus Output #1 (ARINC 429)
9	O_PDL_B	B Transmit Data Bus Output #1 (ARINC 429)
10-15		
16	O_SHIELD	Output Bus Shields
17	I_THMICON2	Cockpit Voice Micro_on input #2
18	I_PDLLA	LINK A
19	I_PDLLB	LINK B
20	115VHOT	Hot 115VAC Output
21	CASE GND	Chassis Ground
22	115VCOLD	Cold 115VAC Output
23	O_THLIGHT2	Cockpit Voice Call Light output #2
24-27		
28	I_OPTEST	Op/Test
29-34		
35	O_THAUDIOLO	Test Handset Audio Output LO
36	O_THAUDIOHI	Test Handset Audio Output HI
37	28VHOT	28 VDC Hot
38	28VCOLD	28 VDC Return
39	I_ENDCALL2	Place end/call input #2
40	RXD RS232	RS_232 Receive RXD
41	TXD RS232	RS_232 Transmit TXD
42-47		
48	LOGIC GND	Logic Common (GND)
49-53		

SDU front panel connector pin assignment

Figure 17

(3) HLD rear connector

RADIALL type connector **NSX F 2**R **221** YB 00 -- or equivalent (mating connector : RADIALL **NSX N 2P 221** S 00 -- or equivalent).

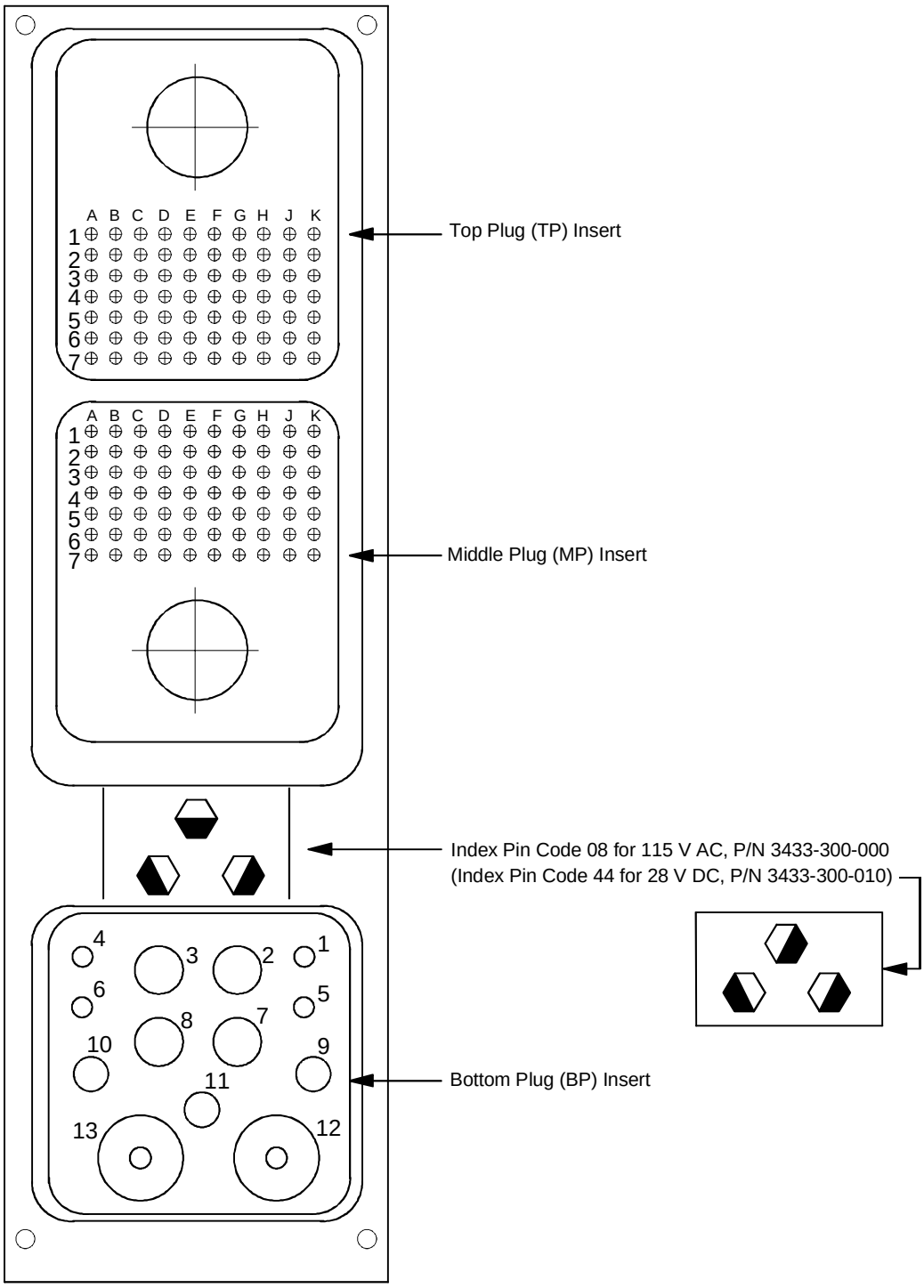

HLD rear ARINC 600 connector

Figure 18

(a) HLD rear top plug connector

The top plug connector permits to connect the 2 ARINC 429 links to the SDU and the RF Tx coaxial cable from the SDU.

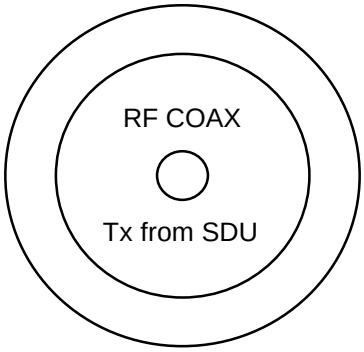

TPC 1

	A	B	C	D	E	F	G	H	J	K
1	INPUT MULTI-CTL A MCBA	INPUT MULTI-CTL B MCBB	OUTPUT HLD BITE A BSBA	OUTPUT HLD BITE B BSBB	Not used	Not used	Not used	Not used	Not used	Not used
2	Not used	Not used	Not used	Not used	Not used	Not used	Not used	Not used	Not used	Not used
3	Reserved	Reserved	Not used	Not used	Not used	Not used	Not used	Not used	Not used	Not used
4	Not used	Not used	Not used	Not used	Not used	Not used	Not used	Not used	Not used	Not used
5	Reserved	Reserved	Not used	Reserved	Not used	Not used	Not used	Not used	Not used	Not used
6	Not used	Not used	Not used	Not used	Not used	Not used	Not used	Not used	Not used	Not used
7	Not used	Not used	Not used	Not used	Not used	Not used	Not used	Not used	Not used	Not used

HLD rear top plug connector

Figure 19

(b) HLD rear middle plug connector

The middle plug connector permits to connect the RF coaxial cable to the IGA.

	A	B	C	D	E	F	G	H	J	K
1	Not used	Not used	Not used	Not used	Not used	Not used	Not used	Not used	Not used	Not used
2	Not used	Not used	Not used	Not used	Not used	Not used	Not used	Not used	Not used	Not used
3	Not used	Not used	Not used	Not used	Not used	Not used	Not used	Not used	Not used	Not used
4	Not used	Not used	Not used	Not used	Not used	Not used	Not used	Not used	Not used	Not used
5	Not used	Not used	Not used	Not used	Not used	Not used	Not used	Not used	Not used	Not used
6	Not used	Not used	Not used	Not used	Not used	Not used	Not used	Not used	Not used	Not used
7	Not used	Not used	Not used	Not used	Not used	Not used	Not used	Not used	Not used	Not used

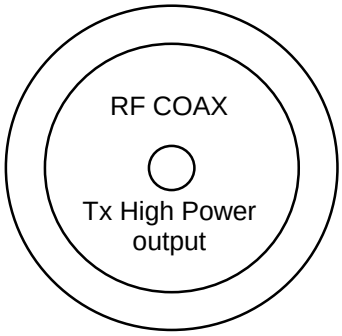

MPC1

HLD rear middle plug connector

Figure 20

(c) HLD rear bottom plug connector

The bottom plug connector permits to connect the HLD power supply, as well as the Rx RF coaxial cable to the SDU.

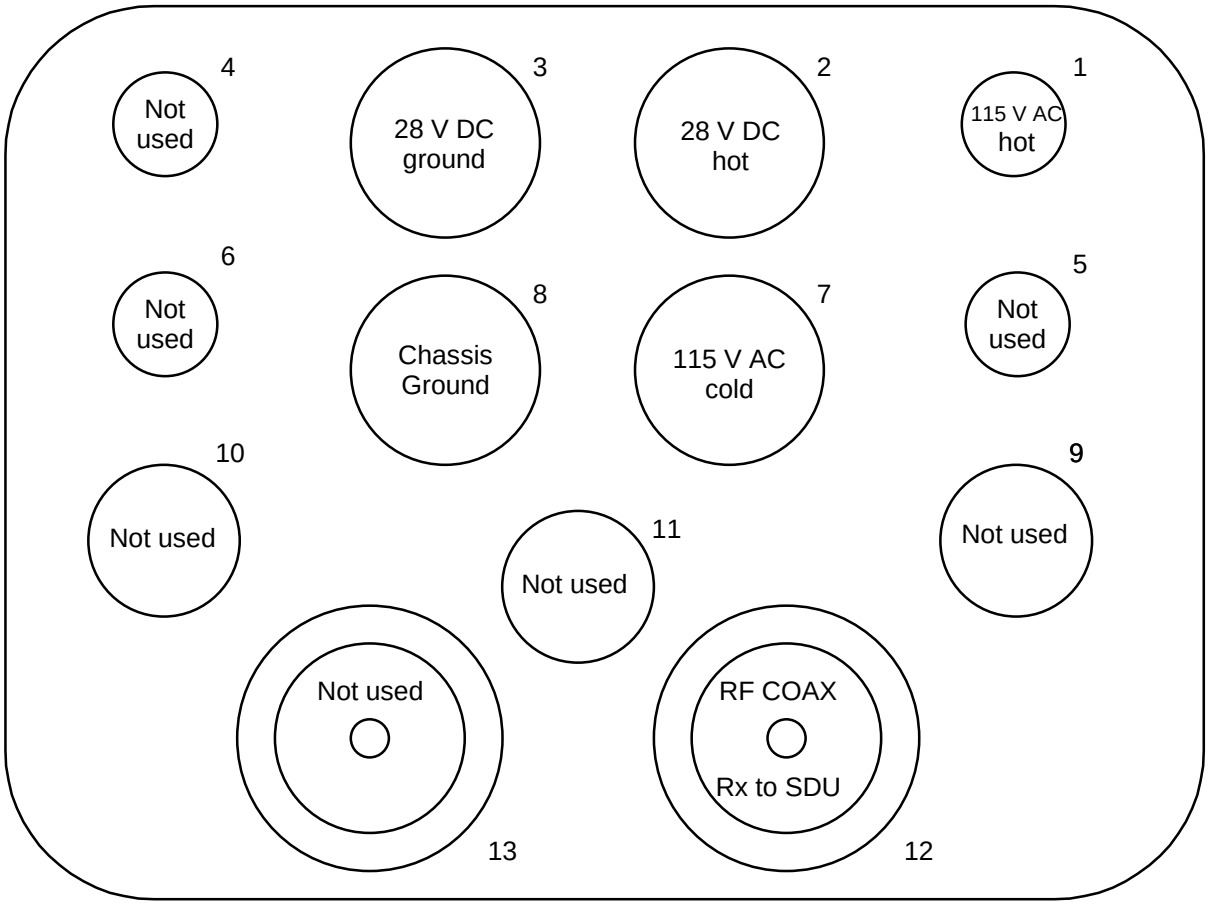

HLD rear bottom plug connector

Figure 21

(4) CTU rear connector

Radiall type connector NSXG2R201YB0004 (mating connector : RADIALL TBD or equivalent).

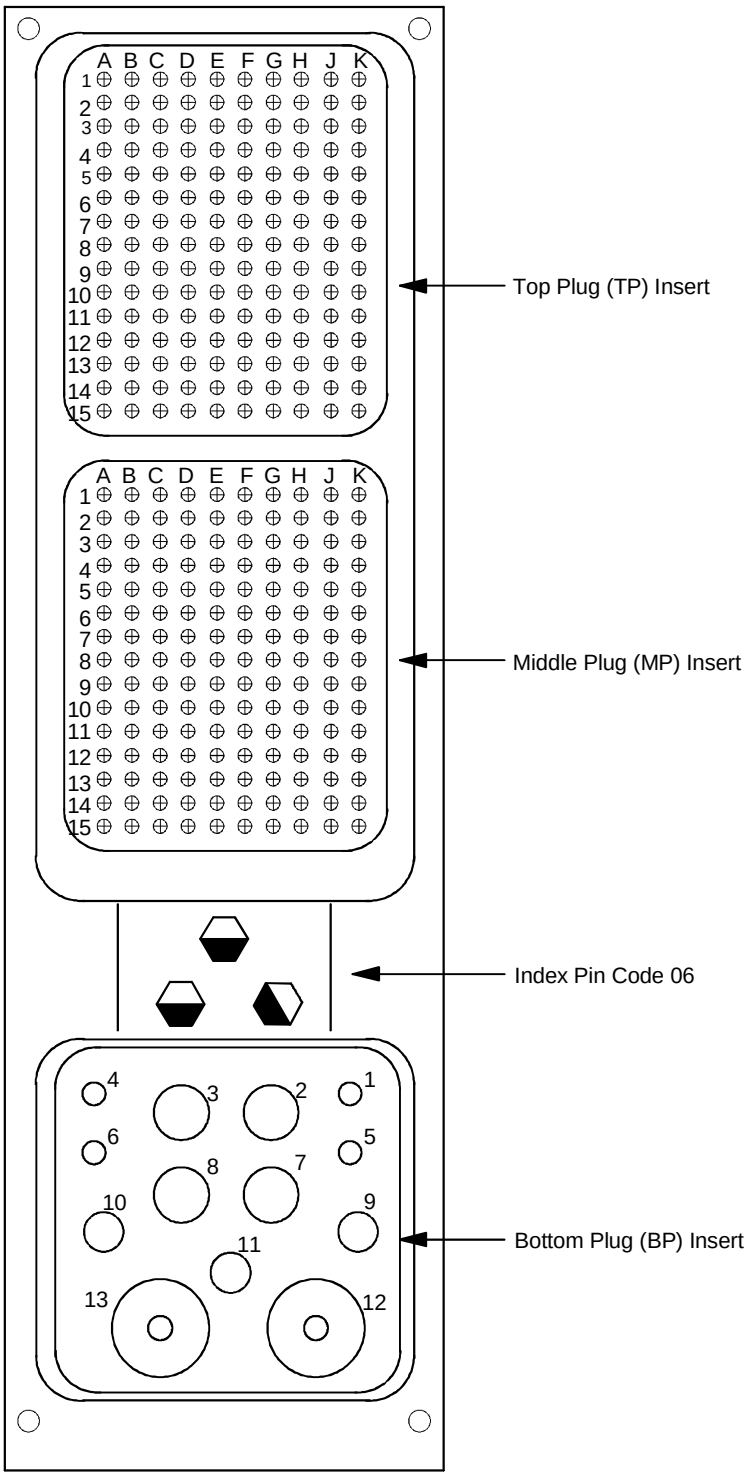

CTU rear ARINC 600 connector

Figure 22

Pin assignment :

(a) CTU rear top plug connector

The top plug connector permits connection to avionics equipment and up to 64 digital handsets :

- Data loader
- CFDS
- Another CTU (CEPT-E1 link)
- Discretes (ICAO, WOW)
- 8 S0 loops (for up to 64 handsets) when using CTU part number 3433-700-000.

	A	B	C	D	E	F	G	H	J	K
1	Not used	Not used	Not used	Not used	Not used	Not used	Not used	Not used	Not used	Not used
2	Not used	Not used	Not used	Not used	Not used	Not used	Not used	Not used	Not used	Not used
3	CEPT-E1-1i/pa 1CEPT-E1	CEPT-E1-1i/pb 1CEPT-E1	CEPT-E1-1o/pa 1CEPT-E1	CEPT-E1-1o/pb 1CEPT-E1	CEPT-E1-1SLD 1CEPT-E1	CEPT-E1-2i/pa 2CEPT-E1	CEPT-E1-2i/pb 2CEPT-E1	CEPT-E1-2o/pa 2CEPT-E1	CEPT-E1-2o/pb 2CEPT-E1	CEPT-E1-2SLD 2CEPT-E1
4	Not used	Not used	Not used	Not used	Not used	24429-TX-1 Data Loader TXA	24429-TX-2 Data Loader TXB	24429-RX-1 Data Loader RXA	24429-RX-1 Data Loader RXB	24429-SLD Data Loader SLD
5	3A429-TX-1 Bite/CFDS 429-TXA	3A429-TX-2 Bite/CFDS 429-TXB	3A429-RX-1 Bite/CFDS 429-RXA	3A429-RX-1 Bite/CFDS 429-RXB	3A429-SLD Bite/CFDS 429-SLD	Spare	Spare	Spare	Spare	Spare
6	PP1 ICAO address bit #1 MSB	PP2 ICAO address bit #2	PP3 ICAO address bit #3	PP4 ICAO address bit #4	PP5 ICAO address bit #5	PP6 ICAO address bit #6	PP7 ICAO address bit #7	PP8 ICAO address bit #8	PP9 ICAO address bit #9	PP10 ICAO address bit #10
7	PP11 ICAO address bit #11	PP12 ICAO address bit #12	PP13 ICAO address bit #13	PP14 ICAO address bit #14	PP15 ICAO address bit #15	PP16 ICAO address bit #16	PP17 ICAO address bit #17	PP18 ICAO address bit #18	PP19 ICAO address bit #19	PP20 ICAO address bit #20
8	PP21 ICAO address bit #21	PP22 ICAO address bit #22	PP23 ICAO address bit #23	PP24 ICAO address bit #24 LSB	ICAO-common ICAO common address	1429-RX-1 ICAO 429-RXA	1429-RX-2 ICAO 429-RXB	1429-RX-SLD ICAO 429-SLD	Dataload A DATALOAD discrete A	Dataload B DATALOAD discrete B
9	WOW-DIS WOW	WOW-RET WOW RTN	CTU-DIS-H CTU EN/DIS	CTU-DIS-C CTU EN/DIS RTN	CTU-READY-H CTU status	CTU-READY-C CTU status RTN	CTU-DIS-EMH	CTU-DIS-EMC	EXT1-H	EXT1-C
10	1S0-MSB-TX-P	1S0-MSB-TX-N	1S0-MSB-RX-P	1S0-MSB-RX-N	1S0-MSB-SLD	2S0-MSB-TX-P	2S0-MSB-TX-N	2S0-MSB-RX-P	2S0-MSB-RX-N	2S0-MSB-SLD
11	1S0-MCTU-TX-P 1S0	1S0-MCTU-TX-N 1S0	1S0-MCTU-RX-P 1S0	1S0-MCTU-RX-N 1S0	1S0-MCTU-SLD 1S0	Not used	Not used	Not used	Not used	Not used
12	2S0-MCTU-TX-P 2S0	2S0-MCTU-TX-N 2S0	2S0-MCTU-RX-P 2S0	2S0-MCTU-RX-N 2S0	2S0-MCTU-SLD 2S0	3S0-MCTU-TX-P 3S0	3S0-MCTU-TX-N 3S0	3S0-MCTU-RX-P 3S0	3S0-MCTU-RX-N 3S0	3S0-MCTU-SLD 3S0
13	4S0-MCTU-TX-P 4S0	4S0-MCTU-TX-N 4S0	4S0-MCTU-RX-P 4S0	4S0-MCTU-RX-N 4S0	4S0-MCTU-SLD 4S0	5S0-MCTU-TX-P 5S0	5S0-MCTU-TX-N 5S0	5S0-MCTU-RX-P 5S0	5S0-MCTU-RX-N 5S0	5S0-MCTU-SLD 5S0
14	Not used	Not used	Not used	Not used	Not used	6S0-MCTU-TX-P 6S0	6S0-MCTU-TX-N 6S0	6S0-MCTU-RX-P 6S0	6S0-MCTU-RX-N 6S0	6S0-MCTU-SLD 6S0
15	7S0-MCTU-TX-P 7S0	7S0-MCTU-TX-N 7S0	7S0-MCTU-RX-P 7S0	7S0-MCTU-RX-N 7S0	7S0-MCTU-SLD 7S0	8S0-MCTU-TX-P 8S0	8S0-MCTU-TX-N 8S0	8S0-MCTU-RX-P 8S0	8S0-MCTU-RX-N 8S0	8S0-MCTU-SLD 8S0

CTU rear top plug connector layout

Figure 23

(b) CTU rear middle plug connector

The middle plug connector permits connection to eight additional SO loops (additional 64 handsets) when using CTU part number : 3433-700-100.

	A	B	C	D	E	F	G	H	J	K
1	Not used	Not used	Not used	Not used	Not used	Not used	Not used	Not used	Not used	Not used
2	Not used	Not used	Not used	Not used	Not used	Not used	Not used	Not used	Not used	Not used
3	Not used	Not used	Not used	Not used	Not used	Not used	Not used	Not used	Not used	Not used
4	Not used	Not used	Not used	Not used	Not used	Not used	Not used	Not used	Not used	Not used
5	Not used	Not used	Not used	Not used	Not used	Not used	Not used	Not used	Not used	Not used
6	Not used	Not used	Not used	Not used	Not used	Not used	Not used	Not used	Not used	Not used
7	Not used	Not used	Not used	Not used	Not used	Not used	Not used	Not used	Not used	Not used
8	Not used	Not used	Not used	Not used	Not used	Not used	Not used	Not used	Not used	Not used
9	Not used	Not used	Not used	Not used	Not used	Not used	Not used	Not used	Not used	Not used
10	Not used	Not used	Not used	Not used	Not used	Not used	Not used	Not used	Not used	Not used
11	Not used	Not used	Not used	Not used	Not used	Not used	Not used	Not used	Not used	Not used
12	9S0-MCTU-TX-P 9S0	9S0-MCTU-TX-N 9S0	9S0-MCTU-RX-P 9S0	9S0-MCTU-RX-N 9S0	9S0-MCTU-SLD 9S0	10S0-MCTU-TX-P 10S0	10S0-MCTU-TX-N 10S0	10S0-MCTU-RX-P 10S0	10S0-MCTU-RX-N 10S0	10S0-MCTU-SLD 10S0
13	11S0-MCTU-TX-P 11S0	11S0-MCTU-TX-N 11S0	11S0-MCTU-RX-P 11S0	11S0-MCTU-RX-N 11S0	11S0-MCTU-SLD 11S0	12-MCTU-TX-P 12S0	12S0-MCTU-TX-N 12S0	12S0-MCTU-RX-P 12S0	12S0-MCTU-RX-N 12S0	12S0-MCTU-SLD 12S0
14	13S0-MCTU-TX-P 13S0	13S0-MCTU-TX-N 13S0	13S0-MCTU-RX-P 13S0	13S0-MCTU-RX-N 13S0	13S0-MCTU-SLD 13S0	14-MCTU-TX-P 14S0	14S0-MCTU-TX-N 14S0	14S0-MCTU-RX-P 14S0	14S0-MCTU-RX-N 14S0	14S0-MCTU-SLD 14S0
15	15S0-MCTU-TX-P 15S0	15S0-MCTU-TX-N 15S0	15S0-MCTU-RX-P 15S0	15S0-MCTU-RX-N 15S0	15S0-MCTU-SLD 15S0	16-MCTU-TX-P 16S0	16S0-MCTU-TX-N 16S0	16S0-MCTU-RX-P 16S0	16S0-MCTU-RX-N 16S0	16S0-MCTU-SLD 16S0

CTU rear middle plug connector layout

Figure 24

(c) CTU rear bottom plug connector provides CTU power input

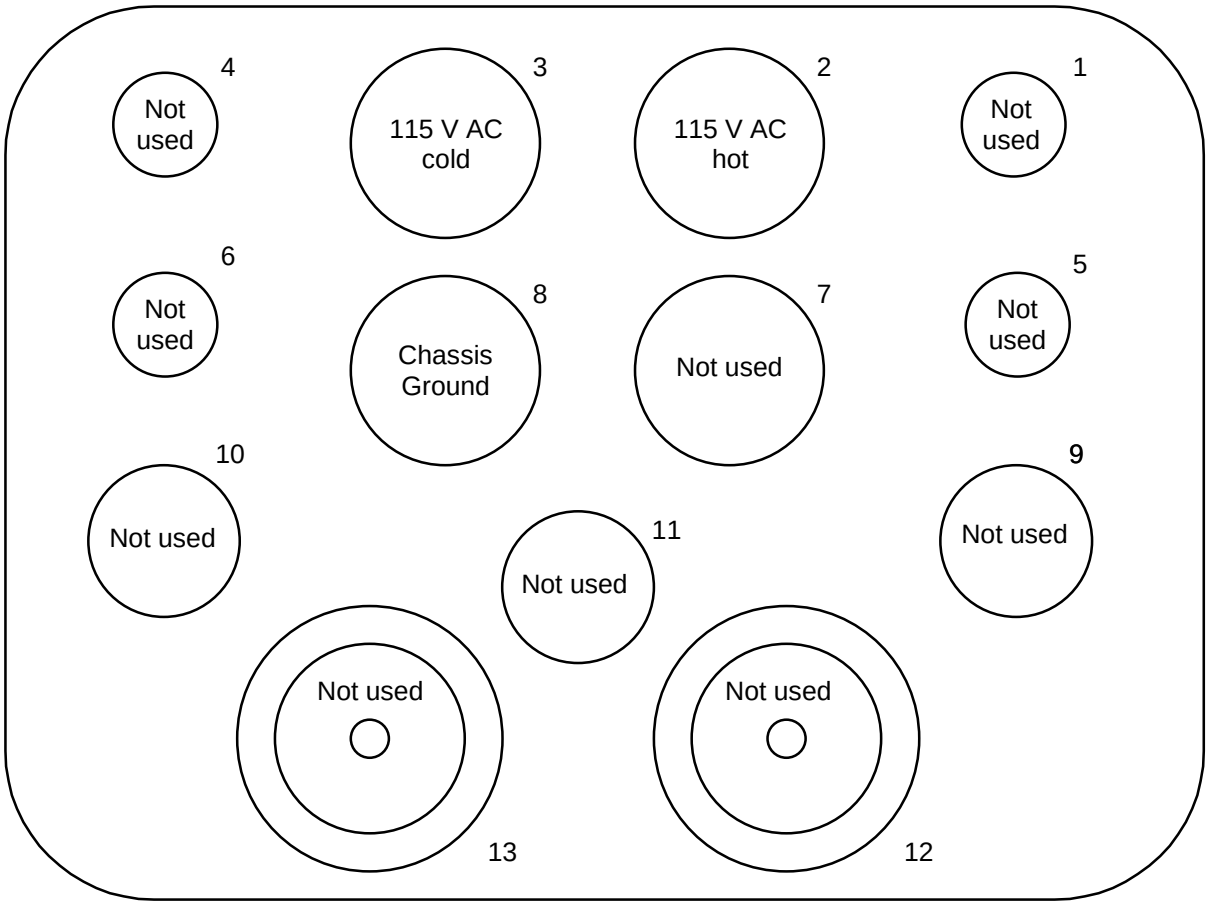

CTU rear bottom plug connector layout

Figure 25

(5) CTU front panel connector

An IBM compatible P.C. equipped with the JETSAT maintenance and commissioning software package may be connected for test.

9 pin male sub D type connector (mating connector : 9 pin female sub D type connector).

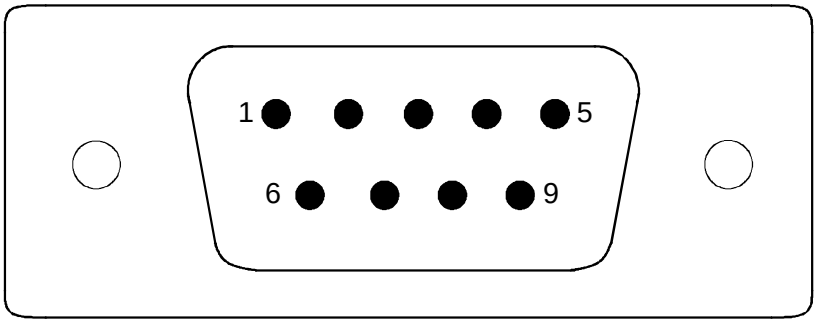

CTU front panel connector layout

Figure 26

PIN NUMBER	NAME	FUNCTION
1-4		Not used
5	GND	Ground
6		Not used
7	RX	Data from maintenance device to CTU
8	TX	Data from CTU to maintenance device
9		Not used

CTU front panel connector pin assignment

Figure 27

(6) Digital handset connector

This connector equips the digital handset.

SWITCHCRAFT TA4M type connector (mating connector : SWITCHCRAFT TA4F or equivalent).

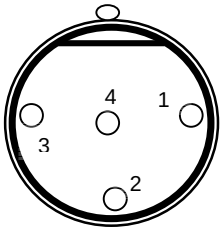

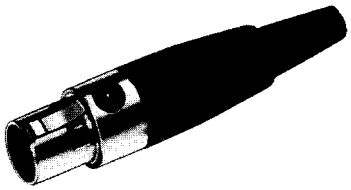

Digital handset connector layout

Figure 28

PIN NUMBER	NAME	FUNCTION
1	TX-	Transmit -
2	RX-	Receive -
3	RX+	Receive +
4	TX+	Transmit +
5	GND	SHIELD (connector body)

Digital handset connector pin assignment

Figure 29

(7) Analogue handset connector

This connector equips the WH10 handset.

MM20M20G3IS RADIALL type connector (mating connector : MM20F20G3IS or equivalent).

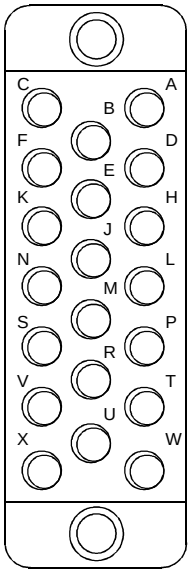

Analogue WH10 type connector layout

Figure 30

PIN NUMBER	NAME
A	
B	
C	
D	
E	Hook
F	
H	
J	Tx
K	Buzzer
L	Buzzer
M	Tx
N	
P	
R	Rx
S	
T	
U	Rx
V	
W	
X	

Analogue WH10 type connector pin assignment

Figure 31

C. Interwiring

(1) Cockpit functionalities

(a) With CMU

SIGNAL NAME	TYPE	FUNCTION	SDU			OTHER
I_CMU1_A	ARINC 429	Data Bus from CMU #1	A	MP1G		From
I_CMU1_B	ARINC 429	Data Bus from CMU #1	B	MP1H		CMU #1
I_CMU2_A	ARINC 429	Data Bus from CMU #2	A	MP3G		From
I_CMU2_B	ARINC 429	Data Bus from CMU #2	B	MP3H		CMU #2
O_CMU12_A_F	ARINC 429	Data Bus to CMU #1 & #2	A	MP1J		To
O_CMU12_B_F	ARINC 429	Data Bus to CMU #1 & #2	B	MP1K		CMU #1 & #2

(b) With audio network system

SIGNAL NAME	TYPE	FUNCTION	SDU			OTHER
I_AUDIO1_H	ANALOG	Cockpit Audio Chan. 1 Input	HI	MP2A		To/From Audio System
I_AUDIO1_L	ANALOG	Cockpit Audio Chan. 1 Input	LO	MP2B		
O_AUDIO1_H_F	ANALOG	Cockpit Audio Chan. 1 Output	HI	MP2C		
O_AUDIO1_L_F	ANALOG	Cockpit Audio Chan. 1 Output	LO	MP2D		
O_LIGHT1_F	DISCRETE	Cockpit Voice Call Light Outp #1		MP8E		
I_MICON1	DISCRETE	Cockpit Voice Mic.On Input #1		MP8F		
I_ENDCALL1	DISCRETE	Place/End Call Input #1		MP11C		
I_AUDIO2_H	ANALOG	Cockpit Audio Chan. 2 Input	HI	MP2E		
I_AUDIO2_L	ANALOG	Cockpit Audio Chan. 2 Input	LO	MP2F		
O_AUDIO2_H_F	ANALOG	Cockpit Audio Chan. 2 Output	HI	MP2G		
O_AUDIO2_L_F	ANALOG	Cockpit Audio Chan. 2 Output	LO	MP2H		
O_LIGHT2_F	DISCRETE	Cockpit Voice Call Light Outp #2		MP8G		
I_MICON2	DISCRETE	Cockpit Voice Mic.On Input #2		MP8H		
I_ENDCALL2	DISCRETE	Place/End Call Input #2		MP11D		
I_CHIM_LAM	DISCRETE	Chime/Lamps Inhibit		MP5H		
I_CHIMRST	DISCRETE	Go-Ahead Chime, Signal Reset		MP14A		
O_CHIME_F	DISCRETE	Contacts Current from Chime		MP14B		
I_CHIME	DISCRETE	Contacts Current to Chime		MP14C		

(c) With radio management panel

SIGNAL NAME	TYPE	FUNCTION	SDU		OTHER
I_RMP_A	ARINC 429	Reserved Data Bus	A	MP8C	From
I_RMP_B	ARINC 429	From RMP	B	MP8D	RMP

(d) With MCDU

SIGNAL NAME	TYPE	FUNCTION	SDU		OTHER
I_MCDU1_A	ARINC 429	Data Bus from MCDU #1	A	MP3C	From
I_MCDU1_B	ARINC 429	Data Bus from MCDU #1	B	MP3D	MCDU #1
I_MCDU2_A	ARINC 429	Data Bus from MCDU #2	A	MP3E	From
I_MCDU2_B	ARINC 429	Data Bus from MCDU #2	B	MP3F	MCDU #2
I_MCDU3_A	ARINC 429	Data Bus from MCDU #3	A	MP8J	From
I_MCDU3_B	ARINC 429	Data Bus from MCDU #3	B	MP8K	MCDU #3
O_MCDU123_A_F	ARINC 429	Data Bus to MCDU #1, #2 & #3	A	MP3J	To MCDU
O_MCDU123_B_F	ARINC 429	Data Bus to MCDU #1, #2 & #3	B	MP3K	#1, #2 & #3

(2) Cabin functionalities

(a) With analogue handsets

SIGNAL NAME	TYPE	FUNCTION	SDU			OTHER	
							Analogue Handset 1
HOOK_1	DISCRETE	WH10 #1 Hook Switch			TP1A	E	Hook
BUZER_1_A	DISCRETE	WH10 #1 Ringer	A		TP1C	L	Buzzer
BUZER_1_B	DISCRETE	WH10 #1 Ringer	B		TP1D	K	Buzzer
I_WH10_1_H	ANALOG	WH10 #1 Audio Input #1	HI		MP1A	J	Tx
I_WH10_1_HL	ANALOG	WH10 #1 Audio Input #1	LO		MP1B	M	Tx
O_WH10_1_H	ANALOG	WH10 #1 Audio Output#1	HI		MP1C	U	Rx
O_WH10_1_L	ANALOG	WH10 #1 Audio Output#1	LO		MP1D	R	Rx
							Analogue Handset 2
HOOK_2	DISCRETE	WH10 #2 Hook Switch			TP1B	E	Hook
BUZER_2_A	DISCRETE	WH10 #2 Ringer	A		TP1E	L	Buzzer
BUZER_2_B	DISCRETE	WH10 #2 Ringer	B		TP1F	K	Buzzer
I_WH10_2_H	ANALOG	WH10 #2 Audio Input #2	HI		MP4J	J	Tx
I_WH10_2_HL	ANALOG	WH10 #2 Audio Input #2	LO		MP4K	M	Tx
O_WH10_2_H	ANALOG	WH10 #2 Audio Output#2	HI		MP5E	U	Rx
O_WH10_2_L	ANALOG	WH10 #2 Audio Output#2	LO		MP5F	R	Rx
							Analog Handset 3
HOOK_3	DISCRETE	WH10 #3 Hook Switch			TP7E	E	Hook
BUZER_3_A	DISCRETE	WH10 #3 Ringer	A		TP7F	L	Buzzer
BUZER_3_B	DISCRETE	WH10 #3 Ringer	B		TP7G	K	Buzzer
I_WH10_3_H	ANALOG	WH10 #3 Audio Input #3	HI		TP7H	J	Tx
I_WH10_3_L	ANALOG	WH10 #3 Audio Input #3	LO		TP7J	M	Tx
O_WH10_3_H	ANALOG	WH10 #3 Audio Output#3	HI		TP7K	U	Rx
O_WH10_3_L	ANALOG	WH10 #3 Audio Output#3	LO		TP8A	R	Rx
							Analog Handset 4
HOOK_4	DISCRETE	WH10 #4 Hook Switch			TP8B	E	Hook
BUZER_4_A	DISCRETE	WH10 #4 Ringer	A		TP8C	L	Buzzer
BUZER_4_B	DISCRETE	WH10 #4 Ringer	B		TP8D	K	Buzzer
I_WH10_4_H	ANALOG	WH10 #4 Audio Input #4	HI		TP8E	J	Tx
I_WH10_4_L	ANALOG	WH10 #4 Audio Input #4	LO		TP8F	M	Tx
O_WH10_4_H	ANALOG	WH10 #4 Audio Output#4	HI		TP8G	U	Rx
O_WH10_4_L	ANALOG	WH10 #4 Audio Output#4	LO		TP8H	R	Rx

(b) With Digital Handsets

SIGNAL NAME	TYPE	FUNCTION	SDU			OTHER	
							Digital handset loop #1
O_1S0TxP_F	DIGITAL	S0 Loop1 – Transmit Output	P	TP5A		3	Rx+
O_1S0TxN_F	DIGITAL	S0 Loop1 – Transmit Output	N	TP5B		2	Rx-
I_1S0RxP	DIGITAL	S0 Loop1 – Receive Input	P	TP5C		4	Tx+
I_1S0RxN	DIGITAL	S0 Loop1 – Receive Input	N	TP5D		1	Tx-
1S0SLD	DIGITAL	S0 Loop1 - Shield		TP5E		5	Ground
							Digital handset loop #2
O_2S0TxP_F	DIGITAL	S0 Loop2 – Transmit Output	P	TP5F		3	Rx+
O_2S0TxN_F	DIGITAL	S0 Loop2 – Transmit Output	N	TP5G		2	Rx-
I_2S0RxP	DIGITAL	S0 Loop2 – Receive Input	P	TP5H		4	Tx+
I_2S0RxN	DIGITAL	S0 Loop2 – Receive Input	N	TP5J		1	Tx-
2S0SLD	DIGITAL	S0 Loop2 - Shield		TP5K		5	Ground
							Digital handset loop #3
O_3S0TxP_F	DIGITAL	S0 Loop 3 – Transmit Output	P	TP6E		3	Rx+
O_3S0TxN_F	DIGITAL	S0 Loop 3 – Transmit Output	N	TP6F		2	Rx-
I_3S0RxP	DIGITAL	S0 Loop 3 – Receive Input	P	TP6G		4	Tx+
I_3S0RxN	DIGITAL	S0 Loop 3 – Receive Input	N	TP6H		1	Tx-
3S0SLD	DIGITAL	S0 Loop 3 - Shield		TP6J		5	Ground
							Digital hanset loop #4
O_4S0TxP_F	DIGITAL	S0 Loop 4 – Transmit Output	P	TP6K		3	Rx+
O_4S0TxN_F	DIGITAL	S0 Loop 4 – Transmit Output	N	TP7A		2	Rx-
I_4S0RxP	DIGITAL	S0 Loop 4 – Receive Input	P	TP7B		4	Tx+
I_4S0RxN	DIGITAL	S0 Loop 4 – Receive Input	N	TP7C		1	Tx-
4S0SLD	DIGITAL	S0 Loop 4 - Shield		TP7D		5	Ground

(c) With CTU

SIGNAL NAME	TYPE	FUNCTION		SDU	OTHER
I_CTURxP	DIGITAL	CTURS422RxP		TP9G	
I_CTURxM	DIGITAL	CTURS422RxM		TP9H	
O_CTUTxP_F	DIGITAL	CTURS422TxP		TP9J	
O_CTUTxM_F	DIGITAL	CTURS422TxM		TP9K	
I_CEPTE1_A	CEPT-E1	Cabin Digital Voice/Data Input	A	MP2J	TP3A
I_CEPTE1_B	CEPT-E1	Cabin Digital Voice/Data Input	B	MP2K	TP3B
O_CPTE18A_F	CEPT-E1	Cabin Digital Voice/Data Output	A	MP3A	TP3C
O_CPTE18B_F	CEPT-E1	Cabin Digital Voice/Data Output	B	MP3B	TP3D
					TP3E

CTU

(d) With Modem

SIGNAL NAME	TYPE	FUNCTION		SDU	OTHER
I_FAXMODRI1	ANALOG	Fax/modem #1 (ring)	R	TP3F	Fax/Modem 1
I_FAXMODTI1	ANALOG	Fax/modem #1 (tip)	T	TP3G	
I_FAXMODRI2	ANALOG	Fax/modem #2 (ring)	R	TP3H	Fax/Modem 2
I_FAXMODTI2	ANALOG	Fax/modem #2 (tip)	T	TP3J	

(e) With CPDF

SIGNAL NAME	TYPE	FUNCTION		SDU	OTHER
I_CPDF_A	ARINC 429	Data Bus from Cabin Packet Data	A	MP1E	CPDF
I_CPDF_AB	ARINC 429	Data Bus from Cabin Packet Data	B	MP1F	
O_CPDF_A_F	ARINC 429	Data Bus To CPDF	A	MP9A	
O_CPDF_B_F	ARINC 429	Data Bus To CPDF	B	MP9B	

(3) E-BAY functionalities

(a) With APM

SIGNAL NAME	TYPE	FUNCTION	SDU	HLD	OTHER
O_APMPOW_H	DIGITAL	APM Power Source	TP4A o——o		APM
O_APMPOW_L	DIGITAL	APM Power Return	TP4B o——o		
O_APMCLOCK	DIGITAL	Clock Output From APM	TP4C o——o		
I_APMDATA	DIGITAL	Data Input From APM	TP4D o——o		
O_APMDATA	DIGITAL	Data Output To APM	TP4E o——o		
O_APMWRIT1	DIGITAL	Write Enable Output #1	TP4F o——o		
O_APMWRIT2	DIGITAL	Write Enable Output #2	TP4G o——o		
O_APMENAB1	DIGITAL	APM Enable #1 Output	TP4H o——o		
O_APMENAB2	DIGITAL	APM Enable #2 Output	TP4J o——o		

(b) With Strap Option

SIGNAL NAME	TYPE	FUNCTION	SDU	HLD	OTHER
I_STROPTIO1	DISCRETE	Strap Option #1	TP10A o——o		Strap option (See System Config. Chapter 2 Page 201).
I_STROPTIO2	DISCRETE	Strap Option	TP10B o——o		
I_STROPTIO3	DISCRETE	Strap Option	TP10C o——o		
I_STROPTIO4	DISCRETE	Strap Option	TP10D o——o		
I_STROPTIO5	DISCRETE	Strap Option	TP10E o——o		
I_STROPTIO6	DISCRETE	Strap Option	TP10F o——o		
I_STROPTIO7	DISCRETE	Strap Option	TP10G o——o		
I_STROPTIO8	DISCRETE	Strap Option	TP10H o——o		
I_STROPTIO9	DISCRETE	Strap Option	TP10J o——o		
I_STROPTIO10	DISCRETE	Strap Option	TP10K o——o		
I_STROPTIO11	DISCRETE	Strap Option	TP11A o——o		
I_STROPTIO12	DISCRETE	Strap Option	TP11B o——o		
I_STROPTIO13	DISCRETE	Strap Option	TP11C o——o		
I_STROPTIO14	DISCRETE	Strap Option	TP11D o——o		
I_STROPTIO15	DISCRETE	Strap Option	TP11E o——o		
I_STROPTIO16	DISCRETE	Strap Option	TP11F o——o		
I_STROPTIO17	DISCRETE	Strap Option	TP11G o——o		
I_STROPTIO18	DISCRETE	Strap Option	TP11H o——o		
I_STROPTIO19	DISCRETE	Strap Option	TP11J o——o		
I_STROPTIO20	DISCRETE	Strap Option	TP11K o——o		
I_STROPTIO21	DISCRETE	Strap Option	TP12A o——o		
I_STROPTIO22	DISCRETE	Strap Option	TP12B o——o		
I_STROPTIO23	DISCRETE	Strap Option	TP12C o——o		
I_STROPTIO24	DISCRETE	Strap Option	TP12E o——o		
I_STROPTIO25	DISCRETE	Strap Option	TP12F o——o		
I_STROPTIO26	DISCRETE	Strap Option	TP12G o——o		
I_STROPTIO27	DISCRETE	Strap Option	TP12H o——o		
I_STROPTIO28	DISCRETE	Strap Option	TP12J o——o		
I_STROPTIO29	DISCRETE	Strap Option	TP12K o——o		
I_STROPTIO30	DISCRETE	Strap Option	TP13A o——o		
I_STROPTIO31	DISCRETE	Strap Option	TP13B o——o		
I_STROPTIO32	DISCRETE	Strap Option	TP13C o——o		
I_STROPTIO33	DISCRETE	Strap Option	TP13D o——o		
I_STROPTIO34	DISCRETE	Strap Option	TP13E o——o		
I_STROPTIO35	DISCRETE	Strap Option	TP13F o——o		
I_STROPTIO36	DISCRETE	Strap Option	TP13G o——o		
I_STROPTIO37	DISCRETE	Strap Option	TP13H o——o		
I_STROPTIO38	DISCRETE	Strap Option	TP13J o——o		
I_STROPTIO39	DISCRETE	Strap Option #39	TP13K o——o		

(c) With serial AES ID

SIGNAL NAME	TYPE	FUNCTION	SDU		HLD	OTHER	
I_AESID_A	DISCRETE	AES ID Input	A	MP4A			AESID
I_AESID_B	DISCRETE	AES ID Input	B	MP4B			

(d) With CFDS

SIGNAL NAME	TYPE	FUNCTION	SDU		HLD	OTHER	
I_CFDS_A	ARINC 429	CFDS Interface (604) Input	A	MP4C			To/From Central Fault Display System
I_CFDS_B	ARINC 429	CFDS Interface (604) Input	B	MP4D			
O_CFDS_A_F	ARINC 429	CFDS Interface (604) Output	A	MP4E			
O_CFDS_B_F	ARINC 429	CFDS Interface (604) Output	B	MP4F			

(e) With HLD

SIGNAL NAME	TYPE	FUNCTION	SDU		HLD	OTHER	
O_MC_A_F	ARINC 429	Multi-Control Output	A	MP4G	TP1A		To/from HLD
O_MC_B_F	ARINC 429	Multi-Control Output	B	MP4H	TP1B		
I_BITEHPA_A	ARINC 429	BITE Input from HLD	A	MP6E	TP1C		
I_BITEHPA_B	ARINC 429	BITE Input from HLD	B	MP6F	TP1D		

(f) With other discretes

SIGNAL NAME	TYPE	FUNCTION	SDU	HLD	OTHER	
I_WOW1	DISCRETE	Weight-on-Wheels Input #1	MP5B			WOW contacts
I_WOW2	DISCRETE	Weight-on-Wheels Input #2	MP5C			
I_WOWPS	DISCRETE	Weight-on-Wheels Program Select	MP5D			
I_MS	DISCRETE	Motion Sensor Input	MP11A			Motion Sensor
I_SPS	DISCRETE	Sensor Program Select	MP11B			
I_E1RELAY	DISCRETE	Bearer Select	TPK4			Manual Switch

(g) With other SDU

SIGNAL NAME	TYPE	FUNCTION	SDU	HLD	OTHER	
I/O_DSSD_F	DISCRETE	Dual System Select	MP5J		MP5K	To/From Other SDU
I_DSDD	DISCRETE	Dual System Disable	MP5K		MP5J	From Other SDU

I_CROSS_A	ARINC 429	SDU Crosstalk from Other SDU	A	MP12A		MP12C	Crosstalk From Other SDU
I_CROSS_B	ARINC 429	SDU Crosstalk from Other SDU	B	MP12B		MP12D	
O_CROSS_A_F	ARINC 429	SDU Crosstalk to other SDU	A	MP12C		MP12A	Crosstalk To Other SDU
O_CROSS_B_F	ARINC 429	SDU Crosstalk to other SDU	B	MP12D		MP12B	

(h) With IRS

SIGNAL NAME	TYPE	FUNCTION	SDU			OTHER
I_IRS1_A	ARINC 429	Data from Primary IRS	A	MP6A	o—o	From IRS
I_IRS1_B	ARINC 429	Data from Primary IRS	B	MP6B	o—o	#1
I_IRS2_A	ARINC 429	Data from Secondary IRS	A	MP6C	o—o	From IRS
I_IRS2_B	ARINC 429	Data from Secondary IRS	B	MP6D	o—o	#2

(i) With Data Loader

SIGNAL NAME	TYPE	FUNCTION	SDU			OTHER
I_ADL_A	ARINC 429	Data Bus from Airborne Data Loader	A	MP7A	o—o	To/From ARINC 615 Data Loader
I_ADL_B	ARINC 429	Data Bus from Airborne Data Loader	B	MP7B	o—o	
O_ADL_A_F	ARINC 429	Data Bus to Airborne Data Loader	A	MP7C	o—o	
O_ADL_B_F	ARINC 429	Data Bus to Airborne Data Loader	B	MP7D	o—o	
I_ADLLA	DISCRETE	Data Loader Link A		MP8A	o—o	
I_ADLLB	DISCRETE	Data Loader Link B		MP8B	o—o	

(j) With FMC

SIGNAL NAME	TYPE	FUNCTION	SDU			OTHER
I_FMC1_A	ARINC 429	Data Bus From FMC #1	A	MP12G	o—o	From FMC #1
I_FMC1_B	ARINC 429	Data Bus From FMC #1	B	MP12H	o—o	
I_FMC2_A	ARINC 429	Data Bus From FMC #2	A	MP12J	o—o	From FMC #2
I_FMC2_B	ARINC 429	Data Bus From FMC #2	B	MP12K	o—o	

(k) With ICAO straps

SIGNAL NAME	TYPE	FUNCTION	SDU			OTHER
I_ICAO_1		ICAO address MSB	#1	MP13C	o—o	MSB
I_ICAO_2			#2	MP13D	o—o	
I_ICAO_3			#3	MP13E	o—o	
I_ICAO_4			#4	MP13F	o—o	
I_ICAO_5			#5	MP13G	o—o	
I_ICAO_6			#6	MP13H	o—o	
I_ICAO_7			#7	MP13J	o—o	
I_ICAO_8			#8	MP13K	o—o	
I_ICAO_9			#9	MP14D	o—o	
I_ICAO_10			#10	MP14E	o—o	
I_ICAO_11			#11	MP14F	o—o	
I_ICAO_12			#12	MP14G	o—o	
I_ICAO_13			#13	MP14H	o—o	ICAO – 24 bits Aircraft Address
I_ICAO_14			#14	MP14J	o—o	
I_ICAO_15			#15	MP14K	o—o	
I_ICAO_16			#16	MP15A	o—o	
I_ICAO_17			#17	MP15B	o—o	
I_ICAO_18			#18	MP15C	o—o	
I_ICAO_19			#19	MP15D	o—o	
I_ICAO_20			#20	MP15E	o—o	
I_ICAO_21			#21	MP15F	o—o	
I_ICAO_22			#22	MP15G	o—o	
I_ICAO_23			#23	MP15H	o—o	
I_ICAO_24		ICAO Address LSB	#24	MP15J	o—o	
ICAOCOM		Aircraft Address Common		MP15K	o—o	LSB

(l) Coaxial cables

SIGNAL NAME	FUNCTION	SDU	HLD	IGA	OTHER
IFNRS	RF coax (NRS)	BP10			NRU-F antenna
IFTX	RF coax (SDU to HLD)	BP12	Att 20 dB	TPC1	Possible attenuators are not presented here
IFRX	RF coax (HLD to SDU)	BP13	Att 10 dB	BP12	
RFIGA	RF coax from IGA to HLD		MPC1	N Female	

(4) Others

(a) With maintenance device

SIGNAL NAME	TYPE	FUNCTION	SDU	HLD	OTHER
I_RXD	RS232	Maintenance Serial Link	TP14A		Maintenance device
O_TXD	RS232	Maintenance Serial Link	TP14B		
LOGIC_GND	RS232	Logic Ground	TP14C		

(b) With power supply network

SIGNAL NAME	TYPE	FUNCTION	SDU	HLD	OTHER
115VHOT		115 VAC Hot	BP1	BP1	BP2
115VCOLD		115 VAC Cold	BP7	BP7	BP3
CASEGND		Chassis ground	BP8	BP8	BP8
28VHOT		28 VDC Hot	BP2	BP2	Note 1
28VCOLD		28 VDC Return	BP3	BP3	

(c) With maintenance panel

SIGNAL NAME	TYPE	FUNCTION	SDU	HLD	OTHER
O_SYSFAIL_F	DISCRETE	SATCOM System Fail Warning	TP1G		Maintenance Panel
O_NOLINK_F	DISCRETE	Satellite Link Not Ready	TP1J		
O_NOCOCKPIT_F	DISCRETE	Cockpit Voice Unavailable	TP3A		
O_NOCARIN_F	DISCRETE	Cabin Voice Unavailabe	TP3B		
O_NODATA_F	DISCRETE	Packet Data Unavailable	TP3C		
O_PMLOWSPE_F	DISCRETE	Packet Data Low Speed Only Available	TP3D		
O_NOSATCOM_F	DISCRETE	SATCOM Inoperable	TP3E		

Note 1 : If the 28 V power supply option is selected, the 115 V AC power supply connections are not installed in the unit.

INSTALLATION

TABLE OF CONTENTS

Page

1. General 101

A. Interchangeability 101

B. Location of equipment 102

C. IGA installation guidelines 104

(1) Type of antenna 104
(2) Choice of antenna location 104
(3) Antenna mounting 106
(4) IGA / HLD R.F. connection 112
(5) Environmental considerations 112

D. HLD location guidelines 115

(1) Location and accessibility 115
(2) Mounting 115
(3) Dimension 115
(4) Weight 116
(5) Cooling 116
(6) LED's on front panel 116
(7) Hardware reset/Test button (front panel) 116
(8) Power supply 116
(9) Power dissipation 117
(10) Connections 117
(11) Environmental conditions 117

E. SDU location guidelines 118

(1) Location and accessibility 118
(2) Mounting 118
(3) Dimension 118
(4) Weight 118
(5) Cooling 118
(6) Front panel display 119
(7) LED's on front panel 119
(8) SDU Hardware Reset/Test button (front panel) 119
(9) Maintenance interfaces 119
(10) Power supply 120
(11) Power dissipation 120

(12) SDU connections 120
(13) Environmental conditions 120

F. NRU-F antenna location guidelines 121

(1) Location 121
(2) Orientation 122
(3) Antenna Mounting 123
(4) Cable 125
(5) Power supply 125
(6) Environmental considerations 125

G. CTU location guidelines 126

(1) Location and accessibility 126
(2) Mounting 126
(3) Weight 126
(4) Cooling 126
(5) LED’s on front panel 126
(6) Hardware Reset/Test button (front panel) 127
(7) Maintenance interfaces 127
(8) Power supply 127
(9) Power dissipation 127
(10) Cables 127
(11) Environmental conditions 127

H. Digital handset location guidelines 128

(1) Location 128
(2) Mounting 128
(3) Dimension 128
(4) Weight 128
(5) LCD displays and LED 129
(6) Magnetic card reader 129
(7) Fax/Modem facility (option) 129
(8) Power supply 129
(9) Cables 129
(10) Environmental conditions 129

LIST OF FIGURES

Figure 101 - Possible location of JETSAT equipment 102

Figure 102 - Typical location on a medium haul aircraft 103

Figure 103 - Detail of the top mounted antenna 109

Figure 104 - Detail of the tail mounted antenna.....113

Figure 105 - HLD 4 MCU tray 115

Figure 106 - Required RF cables attenuation 117

Figure 107 - Attenuator devices installation.....117

INSTALLATION

1. General

The JETSAT SATCOM system should be installed in the aircraft in a manner consistent with acceptable workmanship and engineering practices, and in accordance with the instructions set forth in this manual. To ensure that the system has been properly and safely installed in the aircraft, the installer should make a thorough visual inspection and conduct an overall operational check of the system on the ground prior to flight.

WARNING :

THE R.F. POWER RADIATED BY THE SATCOM ANTENNA CAN CAUSE BODILY HARM. A PERSON IS IN DANGER IN A ZONE WHERE THE POWER FLUX IS 1 mW/cm^2, OR GREATER. DURING JETSAT OPERATION THE SAFETY DISTANCE FROM THE IGA IS $\geq$ 1 meter (3 FEET).

CAUTION :

AFTER INSTALLATION OF THE CABLING AND BEFORE CONNECTING THE EQUIPMENT, A CHECK SHOULD BE MADE WITH AIRCRAFT PRIMARY POWER SUPPLIED TO THE UNIT MATING CONNECTORS TO ENSURE THAT POWER IS APPLIED ONLY TO THE PINS SPECIFIED IN THE INTERWIRING DIAGRAM (See pages 23, 29 and 37).

CAUTION :

ONLY PREFORMED RF CABLES SHALL BE CONNECTED TO THE SATCOM RF SYSTEM EQUIPMENT. ATTEMPTING TO FORM CABLES OR APPLYING STRESS TO THE CABLES WHILE THEY ARE CONNECTED TO EQUIPMENT CONNECTORS MAY CAUSE DAMAGE TO THE EQUIPMENT.

A. Interchangeability

The IGA, HLD and SDU components of this SATCOM system will operate in any installation complying with ARINC Characteristic 761, type C architecture. Therefore, the IGA , HLD and SDU are interchangeable only with identical system components as covered in this manual.

B. Location of equipment

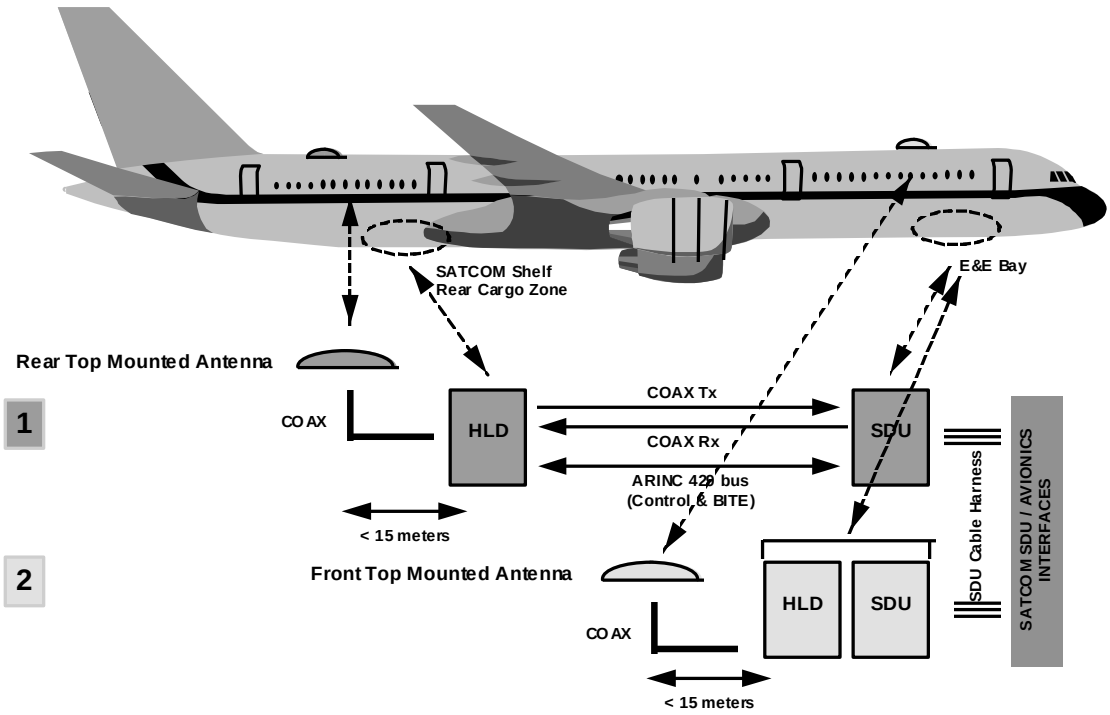

Possible location of JETSAT equipment

Figure 101

JETSAT, SATCOM system component locations cannot be selected independently of each other. To determine the best locations, the installer must select SATCOM system component locations to allow easy access to these components and their connectors.

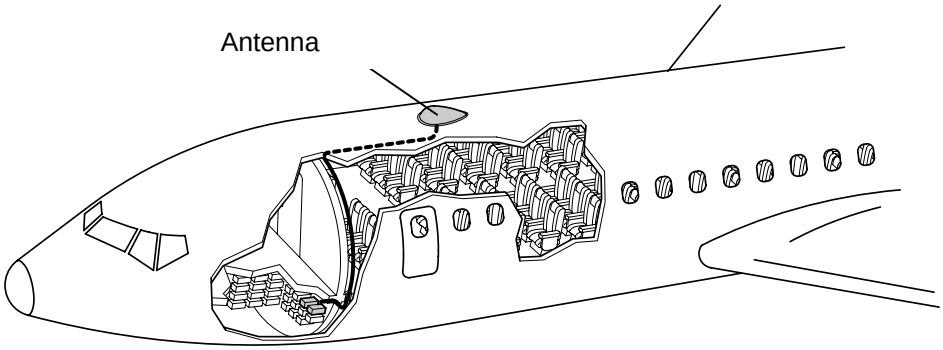

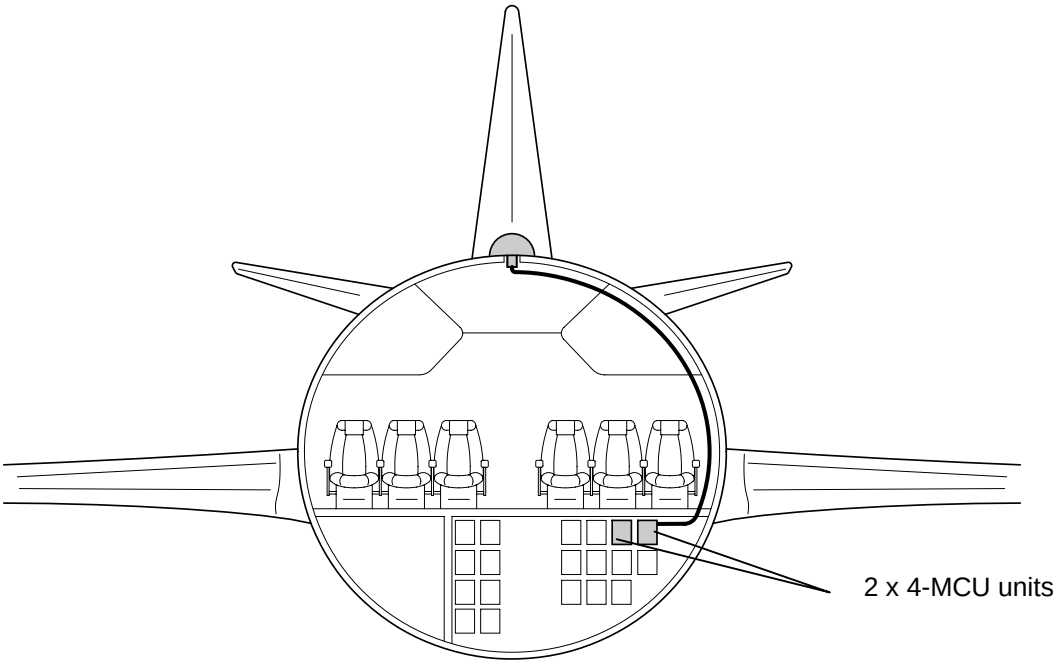

Typical location on a medium haul aircraft

Figure 102

C. IGA installation guidelines

(1) Type of antenna

Depending on the aircraft, the antenna can be either top or tail mounted type. Both models are available from DASSAULT ELECTRONIQUE, both models provide the same initial performance. The type of antenna is the installer choice. The following chapters provide information to guide the installer for this choice.

Note that for tail mounted installations the antenna is supposed to be housed under the A/C tail radome which is not provided by DASSAULT ELECTRONIQUE. For tail mount purpose the antenna is delivered without radome to minimise the antenna size. For top fuselage mounted installations the antenna is delivered equipped with its radome.

(2) Choice of antenna location

(a) Safety considerations

The antenna location must be chosen in order to have no impact on the aircraft safety.

Since the antenna installation implies to drill several holes in the fuselage skin, this may weaken the aircraft structure so that it must be compensated for by local reinforcement of the fuselage skin (e.g. installation of a doubler overlapping the antenna footprint).

The feasibility of this type of modification must be determined and approved by the aircraft manufacturer.

(b) Satellite visibility

To ensure continuity and quality of service the installer must choose a location which minimises the shadowing of the signal path between the satellite and antenna by placing the antenna on the top of the aircraft fuselage as far as possible from the possible obstacles (e.g. aircraft tail), which could block the signal from and to the satellite. The installer should be aware that during normal operations the antenna beam can reach any directions of the upper hemisphere above the horizontal aircraft.

(c) Coaxial cable losses, distance from HLD

The antenna is connected to the HLD by a RF low loss coaxial cable, the distance between the two devices must be such that the cable losses remain within the 1.4 dB limits (at F = 1.66 GHz). Using a very low loss cable, the cable length can be as long as 15 meters.

DASSAULT ELECTRONIQUE remains at the customer disposal to provide technical support for cable selection.

(d) Antenna dimensions

The dimensions of the two antenna types are given by the corresponding outline drawings 3433-105E005 and 3433-105D006, see appendix A and B.

Note that the tail mounted type requires a minimum diameter of 222 mm (8.74 inches) for radiating panel envelope revolution.

(e) Aerodynamic considerations

To minimise the antenna aerodynamic drag of top fuselage installations, it is recommended to install IGA in a zone where the boundary layer thickness is greater than the 5 inches antenna height dimension.

This recommendation is also valid to minimize antenna icing and noise generation.

(f) Operation on the ground

If it is not required to operate the system when the aircraft is on the ground, it is recommended that an HLD power supply interrupt (and therefore a SATCOM system power supply interrupt) be incorporated based on, for example, weight-on-wheels contact, open-door contact, parking brake, etc...

If it is required to operate the system when the aircraft is parked, the antenna location must be chosen such as “no” airport obstacles is obstructing the antenna beam.

(g) L-Band System Physical Isolation

The installation designer should be aware of the need for physical isolation between L-Band antennas. It is suggested that separation resulting in 40 dB of isolation be provided between the SATCOM antenna and other L-Band antennas at the following frequencies:

1572 to 1616 MHz	GPS/GLONASS band
1626.5 to 1660.5 MHz	SATCOM Tx band

This isolation is provided by the distance between the antennas. It is aircraft dependant but the order of magnitude is : 1.6 to 3.5 m (400 to 900 inches).

In addition, it is suggested that separation resulting in 70 dB of isolation be provided between the SATCOM antenna and the TFTS bottom mounted antenna at the following frequencies :

1626.5 to 1660.5 MHz	SATCOM Tx band
1670 to 1675 MHz	TFTS band

If the NRS option is selected the IGA must not be installed closer than 1 m (3ft) to the NRU-F antenna external unit.

For other systems operating in L band, tests or study have to be conducted to determine the minimal distance between equipment.

(3) Antenna mounting

(a) Orientation

As the antenna beam is steered toward the satellite based on the aircraft position and attitude data issued by the aircraft inertial navigation system, the antenna 3 axe references must be the same as the IRS 3 axe references.

To get the maximum performance from the antenna, this unit must be positioned at ∓ 1° from its nominal references (on the 3 axes) whatever is the antenna location.

(b) Top of the fuselage installation

The antenna is delivered equiped with an adaptor base made of non metallic material to adapt the antenna flat base plate to the aircraft fuselage radius of curvature (See figure 103).

The antenna and adapter plate assembly are secured to the aircraft fuselage by mounting screws (NAS type) inserted into sealed, floating, captive stop-nuts attached to the inside surface of the fuselage. The number of peripheral screws and the length of the screws are dependent of the installation.

CAUTION: FOR THE DETERMINATION OF SCREW LENGTH :

The determination of screw length is very important, and depends on doubler and fuselage thickness but also on captive nut size. The screw must not be too long, otherwise it could result in damage to the sealing of the captive nut, or the antenna gasket not being compressed sufficiently on the fuselage.

The consequences of using too long screws is a cabin air leakage and the antenna not being safely attached to the fuselage.

On the opposite, the screw has to be long enough to have a sufficient length into the captive nut. The consequences of using too short screws is the antenna not being safely attached to the fuselage.

Within the same installation, due to aircraft radius of curvature, screw length can differ from one antenna hole to the others , it depends on their respective position on the antenna periphery. Care must be taken to install the correct screw into the corresponding hole otherwise this can damage captive nuts with too long screws or not secure correctly the antenna with too short screws.

There is a potential risk of antenna separation using screws not having the proper length.

The antenna radome lightning diverters are grounded to the A/C metallic fuselage by the mounting screws. The screw/captive nut /fuselage assembly must provide a good electric contact. The electric resistance between the fuselage and the radome lightning diverters must not exceed 25 milliohms.

In addition to the mounting screw holes a 32 mm (1.25 inches) diameter central hole must be drilled to accommodate the antenna connector. This may weaken the aircraft structure sufficiently that it must then be compensated for by local reinforcement of the fuselage skin (e.g. installation of a doubler over the entire mounting surface of the antenna). The feasibility of such a modification must be determined and approved by the aircraft manufacturer.

Antenna drilling dimensions are shown on the antenna outline drawing, in appendix A. To guarantee antenna interchangeability, a drilling template is recommended.

Once drilling is complete, the antenna is installed as follows :

- Check that the antenna O ring gasket seating surface is clean and in good condition (not scratched or crushed).
- Check that the fuselage surface corresponding to the antenna O ring gasket seating surface is clean and in good shape (as “smooth” as possible).
- Remove plastic cover from the antenna connector before installing the antenna on the aircraft.
- Pull the end of the RF cable from inside the aircraft through the access hole.
- Connect the RF cable to the antenna connector.
- Secure the cable connector to the antenna base plate.
- Position the antenna onto the aircraft, inserting the connector and the RF cable trough the middle of the central hole.
- Install and tighten mounting screws. Refer to the antenna outline drawing for initial torque, final torque and required sequence for tightening the screws.

The antenna installation is sealed by the O ring gasket on the antenna base plate compressed by the mounting screws.

This assume that the antenna fasteners are correctly sealed.

The head of the mounting screws can be covered with sealant, while a sealant gasket can be built all around the antenna base plate to smooth the antenna bottom edge with the fuselage.

<u>CAUTION</u> : IN THIS CASE CARE MUST BE TAKEN NOT TO OBSTRUCT WATER DRAINS AND BLOW HOLES AT THE REAR PART OF THE ADAPTER PLATE.

The fuselage metallic surface covered by the antenna can be protected against corrosion by application of a thin coat of MASTINOX for example.

<u>CAUTION</u> :THE RADOME IS WHITE COLOUR PAINTED WHEN DELIVERED, DO NOT RE-PAINT THE RADOME.

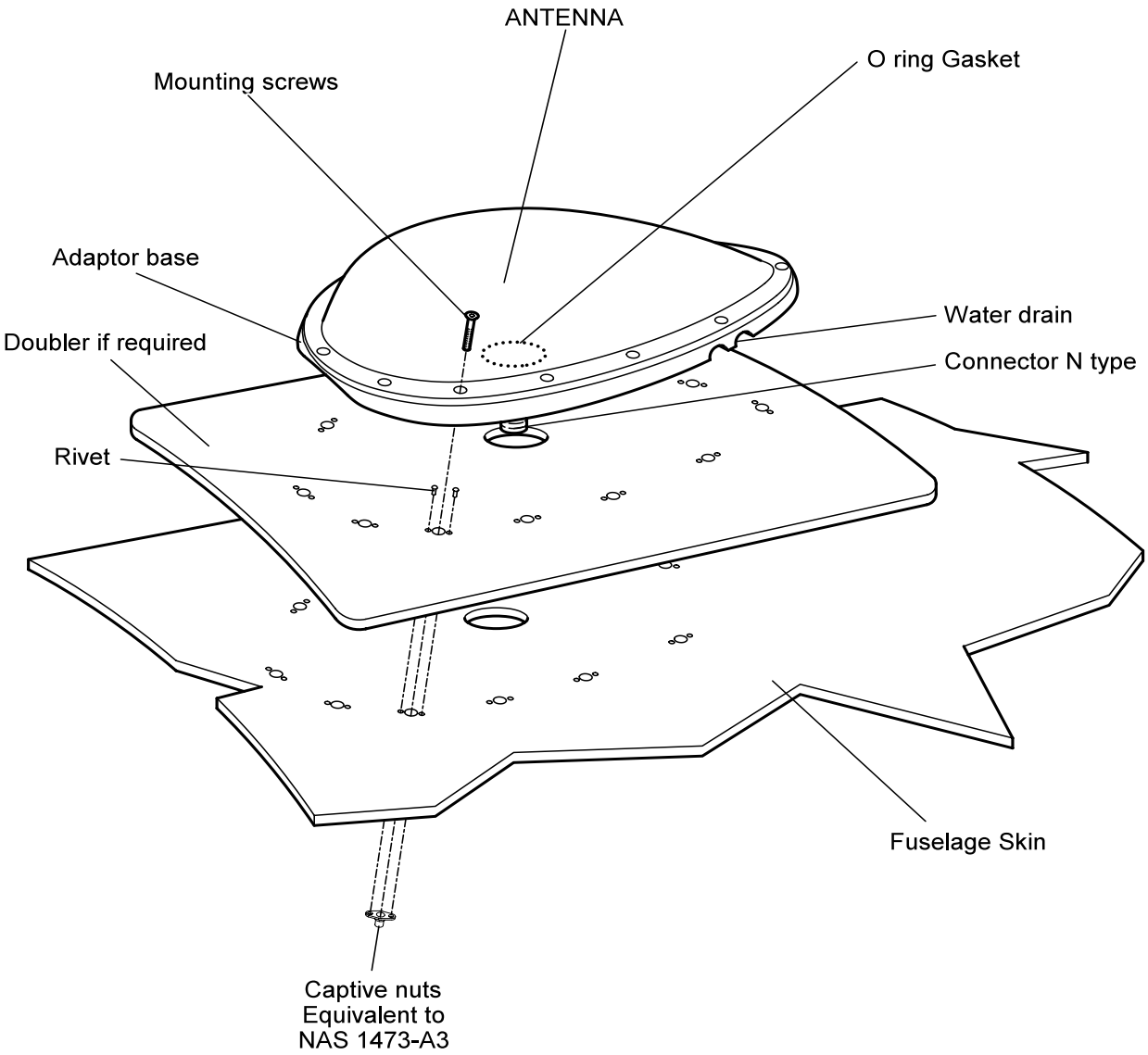

Detail of the top mounted antenna

Figure 103

Note : when delivered the adaptor base is attached to the IGA base plate.

(c) Top of the tail mounting

In this case the antenna (delivered without radome from D.E.) is housed into the top tail aircraft radome.

This radome must provide good electric performance within the all SATCOM band (from 1530 to 1660.5 MHz). The radome losses must remain not greater than 0.5 dB.

The lower are the radome losses the greater are the SATCOM performances.

The tail mounted antenna is provided equipped with a circular base plate which must be used to attach the antenna to the aircraft. This circular base plate is drilled to attach the antenna to the aircraft adapter by mounting screws. The aircraft adapter mechanical interface is aircraft type dependant and not provided by DASSAULT ELECTRONIQUE.

One example of such an installation is given by figure 104.

Antenna dimensions are shown on the antenna outline drawing, in appendix B.

The antenna is installed as follows :

CAUTION : DO NOT MANUALLY MOVE (ROTATE) THE ANTENNA RADIATING PANEL. FORCING THE RADIATING PANEL TO MOVE IN AZIMUTH OR ELEVATION CAN DAMAGE THE ANTENNA MECHANISM.

- Remove the plastic cover from the antenna connector before installing on the aircraft.
- Extract the end of the RF cable from inside the aircraft.
- Connect the RF cable to the antenna connector.
- Secure the cable connector to the antenna base plate.
- Position the antenna onto the aircraft, inserting the connector and the RF cable through the middle of the central hole.
- Install and tighten mounting screws. Refer to the antenna outline drawing for initial torque, final torque and required sequence for tightening the screws.

CAUTION: FOR THE DETERMINATION OF SCREW LENGTH :

The determination of screw length is very important, and depends on aircraft adapter mechanical interface thickness. The screw must not be too long, otherwise it could create obstacles resulting in the antenna not able to rotate, this can cause antenna damage.

On the opposite, the screws have to be long enough to have a sufficient length into the antenna circular base plate. The consequences of using too short screws is the antenna not being safely attached to the aircraft.

(4) IGA / HLD R.F. connection

The antenna is connected to the HLD through a RF coaxial cable.

Maximum cable length : see § C(2)c page 105. The installation designer must be aware that the shorter the cable is the better the system performance are.

CAUTION: DO NOT EXCEED MINIMUM RADIUS OF CURVATURE FOR THE COAXIAL CABLE. USE DUMMY CABLES FOR A FIRST INSTALLATION TO DETERMINE CABLE RUNS. INSTALL THE FINAL CABLES ONLY AFTER THIS MODELING OPERATION.

If necessary , secure the cable by means of evenly spaced collars to prevent the cable from chafing on aircraft parts and surfaces. These collars must be of a design which avoids damaging the cable.

The antenna is powered by the HLD through the RF coaxial cable.

(5) Environmental considerations

The antenna is fully compliant with the RTCA DO160D Environmental Conditions specifications (See Section – DESCRIPTION -
& 4 Environmental Conditions).

Icing : Thanks to its low height (127 mm, 5 inches), it should be easy for the installation designer to select the antenna location such that the antenna unit will remain within the boundary layer thickness with no risk of ice accumulation. If for any reason , this is not the case, the icing consequences must be studied by the installation designer on a case by case basis.

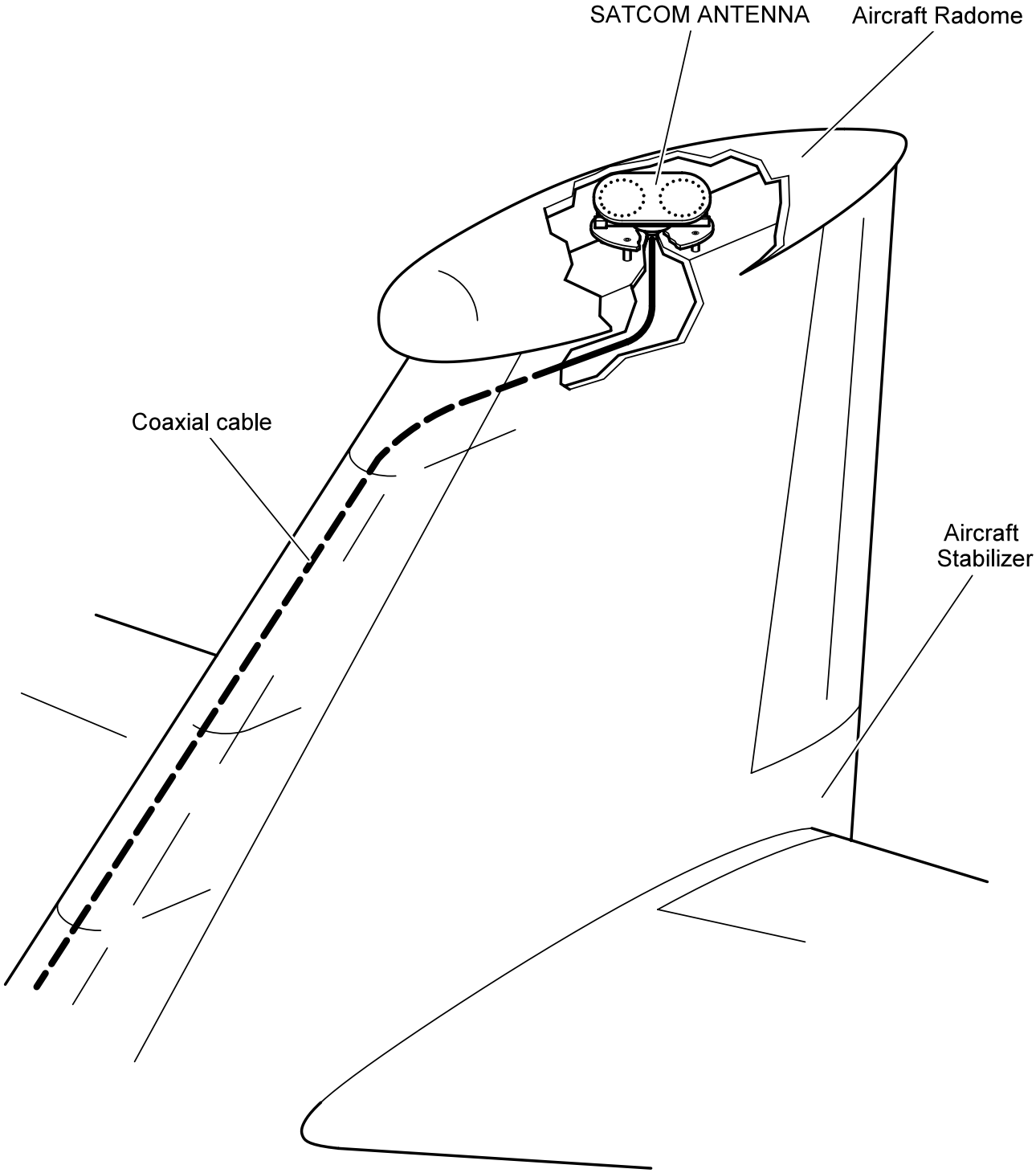

Detail of the tail mounted antenna

Figure 104

D. HLD location guidelines

(1) Location and accessibility

The HLD must be placed in a pressurised zone that is also partially temperature controlled. The HLD requires external forced air cooling. As example the E-bay or the cargo bay are adequate to install this unit.

Maximum IGA/HLD cable length : see § C(2)c page 105.

Whatever is the location , make sure that the HLD front panel is easily accessible in order to view the indicator LED's and to access the Test push button.

(2) Mounting

The HLD is fully compliant with the ARINC 761 recommendations and fits a standard ARINC 600 4-MCU tray.

The tray is rigidly mounted, without shocks absorbers, on a E-shelf.

The HLD is secured in place on the tray by two hold down hooks.

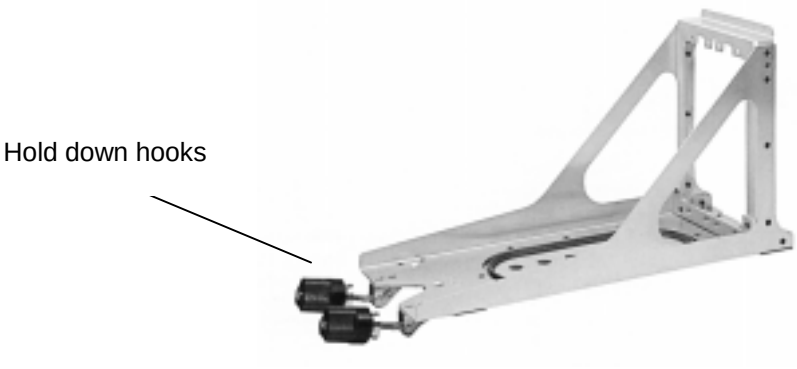

HLD 4 MCU tray

Figure 105

(3) Dimension

HLD dimensions are given by outline drawings ref. : 3433-300E001, see appendix C.

(4) Weight

The HLD should be installed on a tray that will support its weight. For the HLD weight, see system components characteristics : Figure 3 page 6.

(5) Cooling

Required air flow rate = 33 kg / hr at 40° C, as defined in the ARINC 761 recommendations, for a maximum 150W dissipation.

(6) LED's on front panel

Two LED's are located at the front face of the HLD for :

- Power (green LED).
- Status (red LED).

The power LED is steady lighted when power supply correct voltage is applied to the unit.

The power LED is unlighted when there is no power supply.

The status LED is flashing during self-tests.

The status LED is steady lighted when a failure occurs or has occurred since the last reset.

The status LED is unlighted in normal operation.

Note : The status LED is lighted while the Reset Button is pressed.

(7) Hardware reset/Test button (front panel)

A Test push button is placed at the front face of the HLD. Pressing this push button will initiate the functional test of the HLD, the test duration is approximately 10 sec.

(8) Power supply

The HLD is supplied from the aircraft 115V AC 400 Hz, or +28V DC are depending on the version selected.

For the HLD power consumption, see system components characteristics : Figure 3.

(9) Power dissipation

Max. power dissipation, see system components characteristics : Figure 3.

(10) Connections

(a) RF Cables

IGA-HLD RF connection : refer to IGA/HLD chapter.

HLD-SDU RF connection : the ARINC 761 recommendations define levels of attenuation for the two RF cables, as shown below :

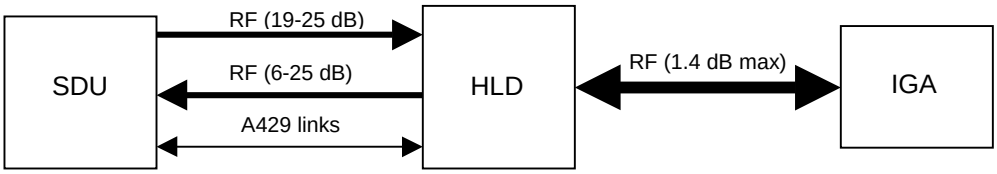

Required RF cables attenuation

Figure 106

As a consequence, it could be necessary to insert attenuation devices on these links to reach the specification limits; The additional attenuation is computed taking into account the initial coaxial cable attenuation value.

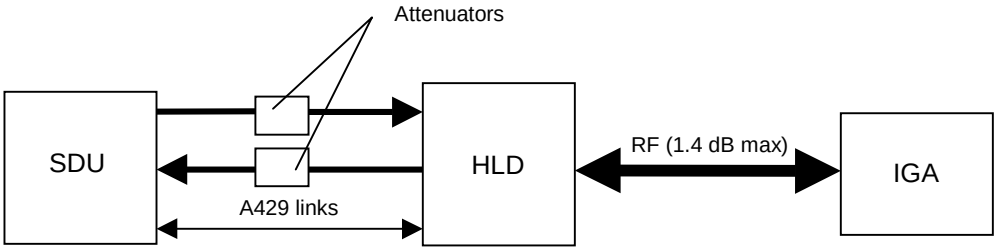

Attenuator devices installation

Figure 107

See Section DESCRIPTION - § 5 Equipment Electrical Connection.

(11) Environmental conditions

The HLD is fully compliant with the RTCA DO160D Environmental Conditions specifications (See Section – DESCRIPTION - § 4 Environmental Conditions).

E. SDU location guidelines

(1) Location and accessibility

The SDU must be placed in a pressurised, and temperature controlled zone. The SDU requires external forced air cooling. As example the E-bay or the cargo bay are adequate to install this unit. For the SDU the E-bay is preferable because of other avionics equipment proximity reducing the SDU wiring task.

There is no distance constraint regarding the RF cabling between the SDU and the HLD.

Whatever the location defined make sure that the SDU front panel is easily accessible in order to view the front panel display , the LED's indicator, and to access the Test push button.

(2) Mounting

The SDU is fully compliant with the ARINC 761 recommendations and fits a standard ARINC 600 4-MCU tray, whatever option(s) are installed into the SDU.

The tray is mechanically the same as defined for the HLD. It is rigidly mounted, without shocks absorbers, on a E-shelf. The SDU and HLD trays differ with cooling and wiring.

The SDU is secured in place by two hold down hooks.

(3) Dimension

SDU dimension are given by outline drawings ref. : 3433-500E001, see appendix D.

(4) Weight

The SDU should be installed on a tray that will support its weight. For the SDU weight, see system components characteristics : Figure 3.

(5) Cooling

Required air flow rate = 22 kg / hr at 40° C, as defined in the ARINC 761 recommendations, for a maximum 100W dissipation.

(6) Front panel display

The SDU front panel display is a 2 line 12 character alpha numeric LCD display which permits display of BITE and system information.

(7) LED's on front panel

Two LED's are located at the front face of the SDU for :

- Power (green LED).
- Status (red LED).

The power LED is steady lighted when power supply correct voltage is applied to the unit.

The power LED is unlighted when there is no power supply.

The status LED is flashing during self-tests.

The status LED is steady lighted when a failure occurs or has occurred since the last reset.

The status LED is unlighted in normal operation.

Note : The status LED is lighted while the Reset Button is pressed.

(8) SDU Hardware Reset/Test button (front panel)

A Test push button is located on the front face of the SDU. Pressing this push button will initiate a RESET of the SDU followed by a system self test. The test duration is approximately 10 sec.

(9) Maintenance interfaces

Rear connector : one EIA/TIA-232 PC interface is available to connect any maintenance device.

Front connector : one EIA/TIA-232 PC interface, one Portable Data Loader (PDL) and one test handset (analogue 4-wires) are available for maintenance purposes.

(10) Power supply

The SDU is supplied from the aircraft 115Vac 400Hz, or +28V DC depending on the version selected.

Max. power consumption : see system components characteristics : Figure 3.

(11) Power dissipation

Max. power dissipation : see system components characteristics : Figure 3.

(12) SDU connections

(a) RF Cables

HLD-SDU connection : see corresponding HLD paragraph

SDU-NRU-F connection (if NRS option installed into the SDU): the coaxial cable to be used is a standard coaxial cable (max losses are : TBD).

For more details on cables, see Section – DESCRIPTION -
§ 5 Equipment Electrical Connection.

(b) Other connections

Refer to the SDU/Aircraft wiring diagram

(13) Environmental conditions

The SDU is full compliant with the RTCA DO160D Environmental Conditions specifications (See Section – DESCRIPTION -
§ 4 Environmental Conditions).

F. NRU-F antenna location guidelines

(1) Location

(a) Safety considerations

The NRU-F antenna location must be chosen in order to have no impact on the aircraft safety.

As the NRU-F antenna installation implies to drill several holes in the fuselage skin, this may weaken the aircraft structure so that it must be compensated for by local reinforcement of the fuselage skin (e.g. installation of a doubler overlapping the antenna footprint).

The feasibility of this type of modification must be determined and approved by the aircraft manufacturer.

(b) GPS satellite visibility

To ensure continuity and quality of service the installer must choose a location which minimises the shadowing of the signal path between the sky (GPS satellite orbits) and NRU-F antenna by placing the antenna on the top of the aircraft fuselage as far as possible from the possible obstacles (e.g. aircraft tail), which could block the signal from the satellites. The installer should be aware that during normal operations the NRU-F antenna can receive GPS signals from any directions of the upper hemisphere above the aircraft.

(c) Vibration

Make sure that the NRU-F antenna will be placed as far as possible from vibration.

(d) Magnetic sources

Make sure that the NRU-F antenna will be placed as far as possible of magnetic sources.

(2) Orientation

To further ensure continuity and quality of service, orient the antenna with a tilt of 1° or less from horizontal.

CAUTION :

THE ORIENTATION OFFSET OF THE ANTENNA RELATIVE TO THE AIRCRAFT MUST BE INCLUDED IN THE ORIENTATION CALIBRATION DATA WHEN CONFIGURING THE SDU.

The orientation offset has the form of yaw, pitch and roll angle, and are automatically measured by the NRS module during the orientation calibration procedure.

(a) Antenna dimensions

The dimensions of the NRU-F antenna is given by the outline drawing 3433-600B001, see appendix E.

(b) Aerodynamic considerations

To minimise the antenna aerodynamic drag of top fuselage installations, it is recommended to install IGA in a zone where the boundary layer thickness is greater than the 1.5 inches antenna height dimension.

This recommendation is also valid to minimize antenna icing and to minimise the possible noise generated by any additional items installed on the fuselage.

(c) Operation on the Ground

If it is required to operate the system when the aircraft is parked, the antenna location must be chosen such that “no” airport obstacles can obstruct the antenna coverage volume.

(d) L-Band System Physical Isolation

The NRU-F antenna outdoor unit must not be installed closer than 1 meter (3ft) to the SATCOM IGA.

For other systems operating in GPS band, tests or study have to be conducted to determine the minimal distance between equipment.

(3) Antenna Mounting

(a) Orientation

To get the maximum performance from the SATCOM system, the NRU-F antenna unit must be positioned at ∓ 1° from the A/C nominal references (on the 3 axes) whatever is the antenna location.

The NRU_F exterior antenna unit acts as the SATCOM references for aircraft position and attitude. This unit must be installed using the same references as the IRS if the SATCOM system is expected to reverse automatically to the IRS when it becomes available and valid.

(b) Installation

The antenna is secured to the aircraft top fuselage by mounting screws (NAS type) inserted into sealed, floating, captive stop-nuts attached to the inside surface of the fuselage. The length of the screws are dependent of the installation.

<u>CAUTION</u>: FOR THE DETERMINATION OF SCREW LENGTH :

The determination of screw length is very important, and depends on doubler and fuselage thickness but also on captive nut size. The screw must not be too long, otherwise it could damage the sealing of the captive nut or the antenna gasket may not be sufficiently compressed on the fuselage. As a consequence cabin air leakage may result or the antenna not be safely attached to the fuselage.

On the other hand, the screw must be long enough to have a sufficient length into the captive nut. Short screws will result in the antenna not being safely attached to the fuselage.

There is a potential risk of antenna separation using screws not having the proper length.

In addition to the mounting screw holes a 29 mm (1,125 inches) diameter central hole must be drilled to accommodate the antenna connector. This may weaken the aircraft structure so that it must be compensated for by local reinforcement of the fuselage skin (e.g. installation of a doubler over the entire mounting surface of the antenna). The feasibility of such a modification must be determined and approved by the aircraft manufacturer.

Antenna drilling dimensions are shown on the antenna outline drawing, in appendix E. To guarantee antenna interchangeability, a drilling template is recommended.

Once drilling is complete, the antenna is installed as follows :

- Check that the fuselage surface corresponding to the antenna O ring gasket seating surface is clean and in good condition (as “ flat” as possible).
- Remove plastic cover from the antenna connector before installing on the aircraft.
- Pull the end of the RF cable from inside the aircraft through the access hole in the fuselage.
- Connect the RF cable to the antenna connector.
- Position the antenna onto the aircraft, feeding the connector and the RF cable through the access hole.
- Install and tighten the 4 mounting screws. Refer to the antenna outline drawing for initial torque and final torque.

The antenna installation is sealed by the O ring gasket on the antenna base plate compressed by the mounting screws.

This assumes that the antenna fasteners are correctly sealed.

The head of the mounting screws can be covered with sealant, while a sealant gasket can be built all around the antenna base plate to smooth the antenna bottom edge with the fuselage.

The fuselage metallic surface covered by the antenna can be protected against corrosion by application of a thin coat of MASTINOX or similar material.

<u>CAUTION</u> :THE RADOME IS WHITE COLOUR PAINTED WHEN DELIVERED, DO NOT RE-PAINT THE RADOME.

(4) Cable

The antenna is connected to the SDU through a standard RF coaxial cable having 10 dB Max losses.

For more detail on cable selection requirements, see Section – DESCRIPTION - § 5 Equipment Electrical Connection.

(5) Power supply

The antenna is powered by the SDU through the RF coaxial cable.

(6) Environmental considerations

The antenna is fully compliant with the RTCA DO160C Environmental Conditions specifications (See Section – DESCRIPTION - § 4 Environmental Conditions).

G. CTU location guidelines

(1) Location and accessibility

The CTU must be placed in a pressurised, and temperature controlled zone. The CTU requires forced air cooling. The E-bay or the cargo bay are typically adequate locations for this unit.

Whatever the location defined, make sure that the SDU front panel is easily accessible in order to view the front panel display and the LED indicator, as well as to access the Test push button.

(2) Mounting

The CTU is fully compliant with the ARINC 746 recommendations and fits a standard ARINC 600 4-MCU tray.

The tray is rigidly mounted, without shocks absorbers, on a E-shelf.

The CTU is secured in place by two hold down hooks.

(3) Weight

The CTU should be installed on a tray that will support its weight. For the CTU weight, see system components characteristics : Figure 3.

(4) Cooling

Required air flow rate, 22 kg / hr at 40° C, complies with ARINC 600 recommendations for a maximum power dissipation. See system components characteristics : Figure 3.

(5) LED’s on front panel

Two LED’s are located on the front panel of the CTU :

- Power (green LED).
- Status (red LED).

The Power LED is on (steady lighted) when power supply correct voltage is applied to the unit.

The Power LED is off (unlighted) when there is no power supplied.

The Status LED is flashing during self-test.

The Status LED is on (steady lighted) when a failure occurs or has occurred since the last reset.

The Status LED is off (unlighted) in normal operation.

Note : The Status LED is on (lighted) while the Reset Button is pressed.

(6) Hardware Reset/Test button (front panel)

A Test push button is located on the front panel of the CTU. Pressing this push button will initiate a RESET/Test of the CTU, the test duration is approximately 10 sec.

(7) Maintenance interfaces

Front 9 pin SUB-D connector : one EIA/TIA-232 PC interface is available for maintenance purposes.

Front 25 pin SUB-D connector : not used

(8) Power supply

The CTU is supplied from the aircraft 115 Vac 400 Hz.

Max. power consumption, see system components characteristics : Figure 3.

(9) Power dissipation

Max. power dissipation, see system components characteristics : Figure 3.

(10) Cables

For more details on cables, see Section – DESCRIPTION -
§ 5 Equipment Electrical Connection.

(11) Environmental conditions

The CTU is fully compliant with the RTCA DO160C Environmental Conditions specifications (See Section – DESCRIPTION -
§ 4 Environmental Conditions).

H. Digital handset location guidelines

(1) Location

This type of handset can be placed either in the cockpit or passenger cabin, depending on the application required.

It is designed to operate with the CTU option (SDU internal MCTU option or external CTU).

The handset must be installed in its cradle. The complete assembly (handset + cradle) has been designed to be flush mounted, integrated into a support (see mounting chapter for details).

(2) Mounting

The digital handset comprises a handset and a cradle assembly, electrically connected together by a cord reel device (length = 1.067 meter, 42 inches).

The cradle assembly may be installed in a passenger seat or wall mounted (e.g. cabin or cockpit wall).

Mounting into a Seat : the cradle may be mounted in the arm or back of the seat. The cradle should be mounted in conformance with the digital SM handset outline drawing in appendix G and in conformity with seat manufacturer specifications.

Mounting on a bulkhead : the cradle should be secured by TBD mounting screws, as defined on the digital bulkhead handset outline drawing in appendix H.

(3) Dimension

Digital handset dimensions are given by outline drawings ref. : 3433-800B001 and ref. : 3433-800B802, see appendix G and H.

(4) Weight

For the total weight for the handset plus the cradle assembly, see system components characteristics : Figure 3.

(5) LCD displays and LED

The handset offers two LCD indicators, designated the "*telephone*" display and the "advertising" display :

- The "telephone " display is located at the front face of the handset.
- The "advertising" display is located at the back face of the handset.

A green LED indicator (power supply indicator) is located at the back face of the handset.

(6) Magnetic card reader

Looking at the "telephone display" the card reader slot is located on the right side of the handset .

(7) Fax/Modem facility (option)

As an option, a RJ 11 socket is available on the handset or cradle for the user to connect a fax machine or a PC modem.

(8) Power supply

The handset operates from a phantom supply voltage of +48Vdc provided by the CTU using the telephone cable (SDU internal HMCTU option or external CTU) .

For typical power consumption per handset, see system components characteristics : Figure 3.

(9) Cables

For more details on cables, see Section – DESCRIPTION -
§ 5 Equipment Electrical Connection.

(10) Environmental conditions

The handset is full compliant with RTCA DO160C Environmental Conditions specifications (See Section – DESCRIPTION -
§ 4 Environmental Conditions).

SYSTEM CONFIGURATION

TABLE OF CONTENTS

Page

1. General 201

2. "Strap option" configuration 201

   A. Signal assignment (see note 6) 201

   B. Pins definition and interpretation (see note 1) 202

      (1) Availability of ICAO 24-bit Aircraft Address (AES ID) from ARINC 429 Ports Coding 202
      (2) FMC Connection to SDU Coding 202
      (3) ARINC 429 Bus Speed to/from CMU #1/#2 Coding 202
      (4) Cabin Packet Data Function (CPDF) 203
      (5) ARINC 429 Bus Speed of AES ID Input Coding 203
      (6) Call Light Activation Coding 203
      (7) Strap Parity (Odd) 203
      (8) Cabin Communication System (CCS) Coding 203
      (9) Configuration Coding 203
      (10) HPA/Antenna Subsystem Configuration 204
      (11) CFDS Type Coding 204
      (12) SDU Configuration Coding 204
      (13) SDU Number Coding (see note 3) 204
      (14) CMU # 1 (ATSU, AFIS, ACARS MU) Installed Coding 204
      (15) CMU #2 (ATSU, AFIS, ACARS MU) Installed Coding 205
      (16) MCDU/SCDU #1 Installed Coding 205
      (17) MCDU/SCDU #2 Installed Coding 205
      (18) Priority 4 calls to/from Cockpit (see note 5) 205
      (19) ARINC 429 Bus Speed to MCDU /SCDU #1, #2, #3 205
      (20) Cockpit Voice Call Light/Chime Option Coding 205
      (21) MCDU/SCDU #3 Installed Coding 206
      (22) SDU CODEC 1 Wiring Coding 206
      (23) SDU CODEC 2 Wiring Coding 206
      (24) Cockpit Hookswitch Signaling Method Coding 206

3. SCM configuration.....208

A. Table of the SDU configuration module.....208

B. System Table (ST).....210

C. Owner/operator Configuration Table (ORT).....211

D. Owner/operator Configuration Table (ORT) PHONEBOOK.....212

SYSTEM CONFIGURATION

1. General

The system configuration is identified either by a “Strap option” configuration or by a SDU software configuration “SDU Configuration Module” (SCM).

The “Strap option” configuration is the default method.

2. “Strap option” configuration

A. Signal assignment (see note 6)

02 Insert	Description
TP10A	Availability of ICAO 24-bit Aircraft Address (AES ID) from ARINC 429 Ports.
TP10B	FMC Connection to SDU
TP10C	FMC Connection to SDU
TP10D	ARINC 429 Bus Speed to/from CMU #1/#2
TP10E	CPDF Configuration
TP10F	ARINC 429 Bus Speed of AES ID Input
TP10G	Reserved for Strap Option
TP10H	Reserved for Strap Option
TP10J	Reserved for Strap Option
TP10K	Call Light Activation
TP11A	Strap Parity (Odd) ; Covering the other 39 Strap Pins
TP11B	CCS Presence
TP11C	IRS Configuration
TP11D	IRS Configuration
TP11E	HPA/Antenna Subsystem Configuration
TP11F	HPA/Antenna Subsystem Configuration
TP11G	HPA/Antenna Subsystem Configuration
TP11H	HPA/Antenna Subsystem Configuration
TP11J	HPA/Antenna Subsystem Configuration
TP11K	HPA/Antenna Subsystem Configuration
TP12A	CFDS Type
TP12B	CFDS Type
TP12C	CFDS Type
TP12D	Reserved for Aircraft ID ARINC 429 Input, or PAD for CFDS/SDU Configuration
TP12E	SDU Configuration
TP12F	SDU Number
TP12G	CMU #1 Configuration
TP12H	CMU #2 Configuration
TP12J	MCDU/SCDU #1 Configuration
TP12K	MCDU/SCDU #2 Configuration

02 Insert	Description
TP13A	Option Priority 4 Calls to/from Cockpit
TP13B	ARINC 429 Bus Speed to MCDU/SCDU #1, #2, #3
TP13C	Cockpit Voice Call Light/Chime Options
TP13D	Cockpit Voice Call Light/Chime Options
TP13E	MCDU/SCDU #3 Configuration
TP13F	SDU CODEC 1 Wiring
TP13G	SDU CODEC 1 Wiring
TP13H	SDU CODEC 2 Wiring
TP13J	SDU CODEC 2 Wiring
TP13K	Cockpit Hookswitch Signaling Method

B. Pins definition and interpretation (see note 1)

(1) Availability of ICAO 24-bit Aircraft Address (AES ID) from ARINC 429 Ports Coding

Pin TP10A	Interpretation
1	ICAO 24-bit Aircraft Address (AES ID) Not available from CMU #1 nor CMU #2 nor (reserved) AES ID Input
0	ICAO 24-bit Aircraft Address (AES ID) is available from CMU #1 and/or CMU #2 and/or (reserved) AES ID Input

(2) FMC Connection to SDU Coding

Pin		Interpretation
TP10B	TP10C	
0	0	FMC #1 Connected, FMC #2 Connected
0	1	FMC #1 Connected, FMC #2 Not Connected
1	0	FMC #1 Not Connected, FMC #2 Connected
1	1	Neither FMC Connected

(3) ARINC 429 Bus Speed to/from CMU #1/#2 Coding

Pin TP10D	Interpretation
0	High Speed ARINC 429 bus
1	Low Speed ARINC 429 bus

(4) Cabin Packet Data Function (CPDF)

Pin TP10E	Interpretation
0	CPDF Installed
1	CPDF Not Installed

(5) ARINC 429 Bus Speed of AES ID Input Coding

Pin TP10F	Interpretation
0	High Speed ARINC 429 bus
1	Low Speed ARINC 429 bus

(6) Call Light Activation Coding

Pin TP10K	Interpretation
0	Call Light On at Call Initiation (for Air/Ground Calls)
1	Call Light On at Call Connection (for Air/Ground Calls)

(7) Strap Parity (Odd)

Pin (see note 2) TP11A	Interpretation
0	Sum of all other Straps set to 1 is Odd
1	Sum of all other Straps set to 1 is Even

(8) Cabin Communication System (CCS) Coding

Pin TP11B	Interpretation
0	CCS Installed
1	CCS Not Installed

(9) Configuration Coding

Pin		Interpretation
TP11C	TP11D	
0	0	Primary IRS Installed, Secondary IRS Installed
0	1	Primary IRS Installed, Secondary IRS Not Installed
1	0	Primary IRS Not Installed, Secondary IRS Installed
1	1	Primary IRS Not Installed, Secondary IRS Not Installed

(10) HPA/Antenna Subsystem Configuration

Reserved.

(11) CFDS Type Coding

Pin TP12			Interpretation
A	B	C	
0	0	0	Undefined
0	0	1	McDonnell-Douglas Type CFDS
0	1	0	Airbus Type CFDS
0	1	1	Honeywell CAIMS
1	0	0	Boeing Type CFDS
1	0	1	Undefined
1	1	0	Undefined
1	1	1	CFDS Not Installed

(12) SDU Configuration Coding

Pin TP12E	Interpretation
0	Second SDU Installed
1	Second SDU Not Installed

(13) SDU Number Coding (see note 3)

Pin TP12F	Interpretation
0	SDU #2
1	SDU #1

(14) CMU # 1 (ATSU, AFIS, ACARS MU) Installed Coding

Pin TP12G	Interpretation
0	CMU #1 Installed
1	CMU #1 Not Installed

(15) CMU #2 (ATSU, AFIS, ACARS MU) Installed Coding

Pin TP12H	Interpretation
0	CMU #2 Installed
1	CMU #2 Not Installed

(16) MCDU/SCDU #1 Installed Coding

Pin TP12J	Interpretation
0	MCDU/SCDU #1 Installed
1	MCDU/SCDU #1 Not Installed

(17) MCDU/SCDU #2 Installed Coding

Pin TP12K	Interpretation
0	MCDU/SCDU #2 Installed
1	MCDU/SCDU #2 Not Installed

(18) Priority 4 calls to/from Cockpit (see note 5)

Pin TP13A	Interpretation
1	Allow Priority 4 calls to/from the Cockpit
0	Inhibit Priority 4 calls to/from the Cockpit

(19) ARINC 429 Bus Speed to MCDU /SCDU #1, #2, #3

Pin TP13B	Interpretation
0	Low Speed ARINC 429 bus
1	High Speed ARINC 429 bus

(20) Cockpit Voice Call Light/Chime Option Coding

Pins (see note 4)		Interpretation
TP13C	TP13D	
0	0	Spare
0	1	Steady Lights & Multistroke Chime
1	0	Flashing Lights & Single Stroke Chime
1	1	Steady Lights & Single Stroke Chime

(21) MCDU/SCDU #3 Installed Coding

Pin TP13E	Interpretation
0	MCDU/SCDU #3 Installed
1	MCDU/SCDU #3 Not Installed

(22) SDU CODEC 1 Wiring Coding

Pins		Interpretation
TP13F	TP13G	
0	0	AMS Wired, Cabin Audio Wired
0	1	AMS Wired, Cabin Audio Not Wired
1	0	AMS Not Wired, Cabin Audio Wired
1	1	AMS Not Wired, Cabin Audio Not Wired

(23) SDU CODEC 2 Wiring Coding

Pins		Interpretation
TP13H	TP13J	
0	0	AMS Wired, Cabin Audio Wired
0	1	AMS Wired, Cabin Audio Not Wired
1	0	AMS Not Wired, Cabin Audio Wired
1	1	AMS Not Wired, Cabin Audio Not Wired

(24) Cockpit Hookswitch Signaling Method Coding

Pin TP13K	Interpretation
1	Switched PTT and/or SCDU Line Select Switch(es)
0	Latched Audio Control Panel SATCOM Mic Switch

Note 1 : Pins assigned to bits that take on the binary “one” state in a given code should be left as open circuits. Pins assigned to take on the binary “zero” state in the code should be jumpered to pin MP15K (Address Common) on the airframe side of the connection.

Note 2 : The coverage of the Parity Pin for the 02 insert connector is TP10A through TP10K and TP11B through TP13K (39 pins other than itself). The coverage of the Parity Pin for the 08 insert connector is TP2A through TP2K and TP3B through TP5K. The Parity Pin is programmed to a zero or one to yield an odd number of strap bits set to the one state, including the Parity Pin itself.

Note 3 : The state of this strap is “Don’t Care” for a single SDU configuration.

Note 4 : The steady vs. Flashing light option applies to the call annunciation phase only. The light remains on (steady) for the duration of the call after the acknowledgement of the annunciation with either the STEADY or FLASHING option.

Note 5 : The following apply for the case of this pin wired to the 0 state : Priority 4 calls are not allowed to or from the cockpit AMS. ORT item “i” (Allowance and Routing of ground-initiated Public Correspondence/Priority 4 calls reference ARINC Characteristic 741 Part 2 Section 4.5.2.3) cannot be allowed to specify the cockpit AMS (If Priority 4 calls are Allowed by item “i”, they are to be routed to the CCS or cabin analog phones). All cockpit AMS initiated calls are to be processed at Priority 3 or higher. Additionally, ORT item “g” (Codec Dedication) cannot be allowed to specify Cabin dedication.

Note 6 : System Configuration pins associated with the 02 top plug insert of the SDU correspond exactly to those specified in ARINC Characteristic 741, Part 1, for the SDU. Those System Configuration pins associated with the 08 top plug insert of the SDU (possessing a type 5 RF coaxial connector as well as interconnection pins) are bracketed to denote clearly their new pin number assignments.

3. SCM configuration

A. Table of the SDU configuration module

Name	7	6	5	4	3	2	1	0	Interpretation	Use
Version (*)	X	X	X	X	X	X	X	X	Version identifier (6 bytes in ASCII format padded with blanks)	FRONT PANEL DISPLAY REQUIREMENTS
Configuration origin (*)	0 0	0 0	0 0	0 0	0 0	0 0	0 0	0 0	From this table From strap option (only for items with no asterisk)	SYSTEM START UP
External CCS presence	0 0	0 0	0 0	0 0	0 0	0 0	0 0	0 1	CCS connected not connected	CABIN TELEPHONE SERVICE
Internal CCS presence (*)	0 0	0 0	0 0	0 0	0 0	0 0	0 0	0 1	Internal CCS connected not connected	CABIN TELEPHONE SERVICE For BIT transfer
IRS configuration	0 0 0 0	0 0 0 0	0 0 0 0	0 0 0 0	0 0 0 0	0 0 0 0	0 0 1 1	0 1 0 1	IRS 1 & 2 connected IRS 1 only connected IRS 2 only connected no IRS connected	SYSTEM START UP core module
MCDU configuration	0 0 0 0 0 0	0 0 0 0 0 0	0 0 0 0 0 0	0 0 0 0 0 0	0 0 0 0 0 0	X X X X 0 1	X X 0 1 X X	0 1 X X X X	MCDU 1 connected MCDU 1 not connected MCDU 2 connected MCDU 2 not connected MCDU 3 connectec MCDU 3 not connected	BITE REQUIREMENTS MCDU REQUIREMENTS
MCDU bus speed for output only	0 0	0 0	0 0	0 0	0 0	0 0	0 0	0 1	High speed Low speed	MCDU REQUIREMETS
CMU configuration	0 0 0 0	0 0 0 0	0 0 0 0	0 0 0 0	0 0 0 0	0 0 0 0	0 0 1 1	0 1 0 1	CMU 1 & 2 connected CMU 1 only connected CMU 2 only connected no CMU connected	BITE REQUIREMENTS CMU REQUIREMENTS
CMU bus speed	0 0	0 0	0 0	0 0	0 0	0 0	0 0	0 1	High speed Low speed	CMU REQUIREMENTS
CFDS configuration	0 0 0 0 0 0 0 0	0 0 0 0 0 0 0 0	0 0 0 0 0 0 0 0	0 0 0 0 0 0 0 0	0 0 0 0 0 0 0 0	0 0 0 0 1 1 1 1	0 0 1 1 0 0 1 1	0 1 0 1 0 1 0 1	Undefined McDonnell-Douglas CFDS Airbus CFDS undefined Boeing CFDS undefined undefined no CFDS connected	Not used
CPDF configuration	0 0	0 0	0 0	0 0	0 0	0 0	0 0	0 1	CPDF connected no CPDF connected	Not used
FMC configuration	0 0 0 0	0 0 0 0	0 0 0 0	0 0 0 0	0 0 0 0	0 0 0 0	0 0 1 1	0 1 0 1	FMC 1 & 2 connected FMC 1 only connected FMC 2 only connected no FMC connected	Not used
RMP configuration (*)	0 0	0 0	0 0	0 0	0 0	0 0	0 0	0 1	RMP connected no RMP connected	Not used
APM configuration (*)	0 0	0 0	0 0	0 0	0 0	0 0	0 0	0 1	APM connected no APM connected	Not used
SDU configuration	0 0	0 0	0 0	0 0	0 0	0 0	0 0	0 1	Second SDU installed no second SDU	BITE REQUIREMENTS DUAL REQUIREMENTS
SDU number	0 0	0 0	0 0	0 0	0 0	0 0	1 1	0 1	SDU 2 SDU 1	DUAL REQUIREMENTS ECL SERVICE
Call light activation	0 0	0 0	0 0	0 0	0 0	0 0	0 0	0 1	At call initiation At call connection	COCKPIT TELEPHONE SERVICE
Cockpit Voice Call Light/Chime option	0 0 0 0	0 0 0 0	0 0 0 0	0 0 0 0	0 0 0 0	0 0 0 0	0 0 1 1	0 1 0 1	Flashing/multi stroke steady/multi stroke flashing/single stroke steady/single stroke	COCKPIT TELEPHONE SERVICE
Cockpit Hook Switch Signalling option	0 0	0 0	0 0	0 0	0 0	0 0	0 0	1 0	Switched PTT Latch ACP SATCOM mic switch	COCKPIT TELEPHONE SERVICE

Name	7	6	5	4	3	2	1	0	Interpretation	Use
Priority 4 calls from cockpit option	0 0	0 0	0 0	0 0	0 0	0 0	0 0	0 1	Inhibite priority 4 call from cockpit Allow priority 4 call from cockpit	COCKPIT TELEPHONE SERVICE
Telephony channel 1 wiring	0 0	0 0	0 0	0 0	0 0	0 0	0 1	1 1	AMS wired AMS not wired	COCKPIT TELEPHONE SERVICE
Telephony channel 2 wiring	0 0	0 0	0 0	0 0	0 0	0 0	0 1	1 1	AMS wired AMS not wired	COCKPIT TELEPHONE SERVICE
AES ID from ARINC 429	0 0	0 0	0 0	0 0	0 0	0 0	0 0	0 1	Available Not available	SYSTEM START UP core module
Fax/Data #1 directly connected to SDU (*)	0 0 0	0 0 0	0 0 0	0 0 0	0 0 0	0 0 0	0 0 1	0 1 0	Not available connected for Fax mode connected for Data mode	SYSTEM START UP core module
Fax/Data #2 directly connected to SDU (*)	0 0 0	0 0 0	0 0 0	0 0 0	0 0 0	0 0 0	0 0 1	0 1 0	Not available connected for Fax mode connected for Data mode	SYSTEM START UP core module
WOW discrete input (*)	0 0	0 0	0 0	0 0	0 0	0 0	0 0	0 1	Available Not available	SYSTEM START UP core module
HLD to IGA cable loss (*)	X	X	X	X	X	X	X	X	Value in tenth dB (0 to 250)	SYSTEM START UP core module
SDU to HLD cable loss (*)	X	X	X	X	X	X	X	X	Value in tenth dB (0 to 250)	SYSTEM START UP core module
HLD to SDU cable loss (*)	X	X	X	X	X	X	X	X	Value in tenth dB (0 to 250)	SYSTEM START UP core module
Antenna TX gain threshold (*)	X	X	X	X	X	X	X	X	Value in tenth dB (0 to 70)	SYSTEM START UP core module

Note : The character (*) beside any field name indicates that a pin programming is not possible with that configuration.

B. System Table (ST)

This table containts the initial search information for the satellites which may be used at log-on. Information for at least one satellite must be provided.

Afterward, the Core Module is responsible for the Log on Confirm Table and the Spot Beam Map.

Name	**7**	**6**	**5**	**4**	**3**	**2**	**1**	**0**	**Interpretation**	**Use**
Version	X	X	X	X	X	X	X	X	Version identifier (6 bytes in ASCII format padded with blanks)	FRONT PANEL DISPLAY REQUIREMENTS
Number of satellites	X	X	X	X	X	X	X	X	Number of satellite in this table (maximum value is 8)	SYSTEM STARTUP
For satellite id #0									Information for AOR-W satellite	
Satellite ident	X	X	X	X	X	X	X	X	Satellite identifier	SYSTEM STARTUP
Satellite Name	X	X	X	X	X	X	X	X	Satellite name in ASCII on 8 bytes ended by a 0 termination field.	For provision or display usage.
P-channel frequency #1	X	X	X	X	X	X	X	X	2 bytes (MSB first) value 0 if not provided.	SYSTEM START UP core module
P-channel frequency #2	X	X	X	X	X	X	X	X	2 bytes (MSB first) value 0 if not provided.	SYSTEM START UP core module
Satellite longitude	X	X	X	X	X	X	X	X	2 bytes (MSB first) value 0 if not provided.	SYSTEM START UP core module
For satellite id #1									Information for AOR-E satellite	
Satellite ident	X	X	X	X	X	X	X	X	Satellite identifier	SYSTEM STARTUP
Satellite Name	X	X	X	X	X	X	X	X	Satellite name in ASCII on 8 bytes ended by a 0 termination field.	For provision or display usage.
P-channel frequency #1	X	X	X	X	X	X	X	X	2 bytes (MSB first) value 0 if not provided.	SYSTEM START UP core module
P-channel frequency #2	X	X	X	X	X	X	X	X	2 bytes (MSB first) value 0 if not provided.	SYSTEM START UP core module
Satellite longitude	X	X	X	X	X	X	X	X	2 bytes (MSB first) value 0 if not provided.	SYSTEM START UP core module
For satellite id #2									Information for POR satellite	
Satellite ident	X	X	X	X	X	X	X	X	Satellite identifier	SYSTEM STARTUP
Satellite Name	X	X	X	X	X	X	X	X	Satellite name in ASCII on 8 bytes ended by a 0 termination field.	For provision or display usage.
P-channel frequency #1	X	X	X	X	X	X	X	X	2 bytes (MSB first) value 0 if not provided.	SYSTEM START UP core module
P-channel frequency #2	X	X	X	X	X	X	X	X	2 bytes (MSB first) value 0 if not provided.	SYSTEM START UP core module
Satellite longitude	X	X	X	X	X	X	X	X	2 bytes (MSB first) value 0 if not provided.	SYSTEM START UP core module
For satellite id #3									Information for IOR satellite	
Satellite ident	X	X	X	X	X	X	X	X	Satellite identifier	SYSTEM STARTUP
Satellite Name	X	X	X	X	X	X	X	X	Satellite name in ASCII on 8 bytes ended by a 0 termination field.	For provision or display usage.
P-channel frequency #1	X	X	X	X	X	X	X	X	2 bytes (MSB first) value 0 if not provided.	SYSTEM START UP core module
P-channel frequency #2	X	X	X	X	X	X	X	X	2 bytes (MSB first) value 0 if not provided.	SYSTEM START UP core module
Satellite longitude	X	X	X	X	X	X	X	X	2 bytes (MSB first) value 0 if not provided.	SYSTEM START UP core module

C. Owner/operator Configuration Table (ORT)

This table contains information which may be defined by the owner of the aircraft installation :

Name	7	6	5	4	3	2	1	0	Interpretation	Use
Version	X	X	X	X	X	X	X	X	Version identifier (6 bytes in ASCII format padded with blanks)	FRONT PANEL DISPLAY REQUIREMENTS
Log-on policy	0 0	0 0	0 0	0 0	0 0	0 0	0 0	0 1	Automatic Manual (with MCDU)	SYSTEM START UP core module MCDU REQUIREMENTS
Order of preference of GES for log-on	X	X	X	X	X	X	X	X	Description in note 7	SYSTEM START UP core module MCDU REQUIREMENTS
Priority 4 (Public) calls dispatch	0 0 0	0 0 0	0 0 0	0 0 0	0 0 0	0 0 0	0 0 1	0 1 0	To cockpit To cabin To nothing	COCKPIT TELEPHONE SERVICE (to cabin option not supported)
ATC call register option	0 0	0 0	0 0	0 0	0 0	0 0	0 0	0 1	Available Not available	Not used
ATC call number	X	X	X	X	X	X	X	X	19 bytes in ASCII format beginning with “00” ending with 0.	For test handset
TEST call register option	0 0	0 0	0 0	0 0	0 0	0 0	0 0	0 1	Available Not available	COCKPIT TELEPHONE SERVICE
TEST call number	X	X	X	X	X	X	X	X	19 bytes in ASCII format beginning with “00” ending with 0.	COCKPIT TELEPHONE SERVICE
New predefined number entry inhibition	0 0	0 0	0 0	0 0	0 0	0 0	0 0	0 1	Available Not available (inhibited)	MCDU REQUIREMENTS
Manual dial inhibition	0 0	0 0	0 0	0 0	0 0	0 0	0 0	0 1	Available Not available (inhibited)	MCDU REQUIREMENTS

<u>Note 7</u> : the preferred GES are stored as below.

Name	7	6	5	4	3	2	1	0	Interpretation	Use
Number of preferred choices (a couple SAT/GES)									From 0 to 20	
Satellite identifier #1	X	X	X	X	X	X	X	X	From 0 to 3 in the system table.	COCKPIT TELEPHONE SERVICE MCDU REQUIREMENTS
GES identifier #1	X	X	X	X	X	X	X	X	From 0 to 255	COCKPIT TELEPHONE SERVICE MCDU REQUIREMENTS
GES name #1	X	X	X	X	X	X	X	X	In ASCII format on 12 bytes maximum, ended by a 0 termination field.	MCDU REQUIREMENTS
Satellite identifier #2	X	X	X	X	X	X	X	X	From 0 to 3 in the system table.	COCKPIT TELEPHONE SERVICE MCDU REQUIREMENTS
GES identifier #2	X	X	X	X	X	X	X	X	From 0 to 255	COCKPIT TELEPHONE SERVICE MCDU REQUIREMENTS
GES name #2	X	X	X	X	X	X	X	X	In ASCII format on 12 bytes maximum, ended by a 0 termination field.	MCDU REQUIREMENTS

D. Owner/operator Configuration Table (ORT) PHONEBOOK

Name	**7**	**6**	**5**	**4**	**3**	**2**	**1**	**0**	**Interpretation**	**Use**
Number of entries	X	X	X	X	X	X	X	X	The size of this table allows storage of 100 predefined numbers.	
Call priority #1	0 0 0 0 0	0 0 0 0 0	0 0 0 0 0	0 0 0 0 0	0 0 0 0 0	0 0 0 0 1	0 0 1 1 0	0 1 0 1 0	End of table EMERGENCY number SAFETY number NON SAFETY number PUBLIC number	COCKPIT TELEPHONE SERVICE MCDU REQUIREMENTS
Call number protection #1	0 0	0 0	0 0	0 0	0 0	0 0	0 0	0 1	Protected Not protected	MCDU REQUIREMENTS
Call number ident #1	X	X	X	X	X	X	X	X	12 bytes in ASCII format ending with 0.	MCDU REQUIREMENTS
Call number #1	X	X	X	X	X	X	X	X	19 bytes in binary ASCII format beginning with “00” 00 and ending with –10.	COCKPIT TELEPHONE SERVICE MCDU REQUIREMENTS

INSPECTION, SYSTEM CHECK OUT AND COMMISSIONING TEST PROCEDURE

TABLE OF CONTENTS

Page

1. Inspection, system checkout, and flight test procedure 301

   A. Inspection 301

      (1) Preliminary checks 301
      (2) Inspection/Check procedure 301

   B. System checkout 301

      (1) General 301
      (2) Post-installation test 303

   C. Ground/Flight test 303

2. Removal and replacement 303

   A. Intermediate Gain Antenna 304

      (1) Removal 304
      (2) Reinstallation 304

LIST OF FIGURES

Figure 201 - Inspection/Check procedure.....302

INSPECTION, SYSTEM CHECK OUT AND COMMISSIONING TEST PROCEDURE

1. Inspection, system checkout, and flight test procedure

WARNING: THE R.F. POWER RADIATED BY THE SATCOM ANTENNA CAN CAUSE BODILY HARM. A PERSON IS IN DANGER IN A ZONE WHERE THE POWER FLUX IS 5 mW/cm^2, OR GREATER. IT IS ESSENTIAL THAT ALL PERSONNEL BE INFORMED OF THE DANGER ZONE LIMITS AS DEFINED ON PAGE 101.

A. Inspection

(1) Preliminary checks

(a) Check that the contact resistance between the antenna component and a point on the aircraft structure close to the component does not exceed 25 milliohms.

(2) Inspection/Check procedure

Figure 201 provides a visual inspection/check procedure that should be performed during or after the system installation, as part of a system checkout. The procedure can also be used as a periodic maintenance inspection check.

NOTE : Because the installation sequence may be such that certain elements of the antenna subsystem are no longer accessible at the final inspection stage, any checks corresponding to these elements must therefore be made in the course of installation.

B. System checkout

(1) General

At this point, it is assumed that a continuity check of the wiring has been made, and a visual check of the harness installation and R.F. cabling has been performed. Also, the inspection/check procedure of figure 201 should have been completed.

EQUIPMENT	INSPECTION/CHECK PROCEDURE
IGA	(1) Inspect for any sign of damage. (2) Check for proper sealing, appearance, and shape. (3) Check the exterior for nicks or gouges. (4) Check that IGA has been properly installed and that all mounting screws are firmly tightened. (5) Check the tightness and locking of the RF mating connector
HLD	(1) Inspect for any sign of damage. (2) Check that unit is properly installed and that locking hook are firmly tightened. (3) Check that air cooling is provided to this LRU with the correct flow.
SDU	(1) Inspect for any sign of damage. (2) Check that unit is properly installed and that locking hook are firmly tightened. (3) Check that air cooling is provided to this LRU with the correct flow.
CTU	(1) Inspect for any sign of damage. (2) Check that unit is properly installed and that locking hook are firmly tightened. (3) Check that air cooling is provided to this LRU with the correct flow.
Wiring and R.F. Cables	(1) Check that none of the cables have been damaged, and cannot be damaged by components that are installed later. (2) Check that cable runs are spaced away from any moving or hot part that could damage cables during use. (3) Verify that the various R.F. cables are in respect with their respective minimum radius of curvature.

Inspection/Check procedure

Figure 201

(2) Post-installation test

CAUTION: NEVER CONNECT OR DISCONNECT A SATCOM LRU WITH POWER APPLIED. IN ADDITION, NEVER APPLY HIGH-LEVEL R.F. TO A POWERED-DOWN LRU.

This test requires that all the SATCOM system avionics (SDU, HLD, IGA) be connected and operating properly, with a means of displaying any system faults detected by the LRU's during the manually initiated self-test. The results of the self-test may be indicated on the satellite data unit (SDU) front panel display and/or a centralized fault display unit (CFDU), depending upon the installation. Refer to the "Fault Isolation" for information on the BSU fault-detection capabilities.

The initiated self-test is performed by means of a self test command from the SDU. If no system faults are indicated by the self test, then the subsystem installation should be considered acceptable, within the limitations outlined in the "Fault Isolation" section. If any antenna subsystem LRU fails the test, it must be replaced and returned to the shop for repair or shipment back to the factory.

C. Ground/Flight test

Ground/flight testing of the JETSAT SATCOM system should be accomplished during the ground and flight tests of the total SATCOM system avionics. Refer to the applicable system maintenance manual, ref. TBD.

2. Removal and replacement

CAUTION: WHEN REMOVING AND REPLACING IGA, USE CARE IN HANDLING THE COAXIAL CABLES. MAKE CERTAIN THAT THE CABLE MINIMUM SPECIFIED RADIUS OF CURVATURE IS NOT EXCEEDED.

CAUTION: DO NOT REMOVE AN LRU WITH POWER APPLIED. DO NOT APPLY R.F. POWER TO EQUIPMENT THAT IS NOT POWERED UP.

Note : Depending on the installation, it may be necessary to remove another unit in order to gain access to a unit requiring removal.

A. Intermediate Gain Antenna

(1) Removal

(a) Remove the screws that secure the IGA to the aircraft.

(b) Carefully lift the antenna just enough to disconnect the R.F. cable connector from the antenna. Do not loose or damage the "O" ring that fits in a grove on the underside of the antenna.

(c) Remove the antenna.

(2) Reinstallation

(a) Clean all surfaces before installing the antenna.

(b) Check that the antenna O-ring is clean and in good condition (not scratched or crushed) and is installed properly in the grove in the antenna.

CAUTION : IF THE GASKET IS LOOSE OR NOT IN GOOD CONDITION, IT MUST BE REPLACED.

(c) Connect the R.F. cable to the antenna connector.

(d) Secure the cable connector by attaching its lock wire into the appropriate IGA lock wire hole (see IGA outline drawing).

(e) Place the antenna in position on the outside of the aircraft.

(f) Select install and tighten the mounting screws.

(g) Check that the contact resistance between the antenna and the aircraft fuselage does not exceed 25 milliohms.

MAINTENANCE PROCEDURE

TABLE OF CONTENTS

Page

1. Maintenance procedures 401

   A. System configuration 401

   B. System protection 401

   C. Lubrication 401

   D. Cleaning 401

   E. Repair 402

      (1) IGA 402
      (2) HLD 402
      (3) SDU 402
      (4) CTU 402

MAINTENANCE PROCEDURE

1. Maintenance procedures

A. System configuration

The configuration of the SATCOM system is described in specialized tables located in the SDU. Configuration process and parameter are described in configuration chapter of this document.

B. System protection

The subsystem is protected by circuit breakers located at the circuit panel in the aircraft. Additional protection for the LRU's is provided by a fuse located in the unit's power supply. Theses fuses are soldered in place ; consequently, the LRU's must be removed from the aircraft for repairs in event of a blown fuse.

C. Lubrication

The IGA moving parts do not require any scheluded or periodic lubrication or maintenance.

D. Cleaning

When deemed necessary, depending upon the environment to which the equipment is exposed and the intensity of use, periodic cleaning should be performed. The exterior of the units should be wiped with a clean, lint-free cloth dampened with an approved cleaning agent.

Note : Any cleaning of equipment interiors should be limited to that required when performing overhaul (bench-type) work.

E. Repair

(1) IGA

The antenna is fully repairable. Refer to Component Maintenance Manual (TBD).

(2) HLD

The HLD is fully repairable. Refer to Component Maintenance Manual (TBD).

(3) SDU

The SDU is fully repairable. Refer to Component Maintenance Manual (TBD).

(4) CTU

The CTU is fully repairable. Refer to Component Maintenance Manual (TBD).

PACKAGING - STORAGE

TABLE OF CONTENTS

Page

1. Initial Inspection 501
2. Preinstallation Testing 501
3. Equipment Changes and Markings 501
4. Storage 501
   A. Short-time storage 501
   B. Long-time storage 502
5. Repackaging for shipment 502

PACKAGING - STORAGE

1. Initial Inspection

CAUTION:

THIS EQUIPMENT CONTAINS ELECTROSTATIC DISCHARGE SENSITIVE (ESDS) DEVICES. EQUIPMENT, MODULES, AND ESDS DEVICES MUST BE HANDLED WITH APPROPRIATE PRECAUTIONS.

Use care when unpacking the SATCOM system components. Open shipping cartons and carefully remove all items. Check the contents to ensure that all items identified on the packing list are included. Visually inspect each component for damage incurred during shipment; i.e., inspect for dents, deep abrasions, chipped paint, etc. If any component is damaged, notify the transportation carrier immediately.

2. Preinstallation Testing

The components of the JETSAT SATCOM system have all been tested prior to shipment. Therefore, preinstallation testing is not required. If preinstallation bench testing of the units is desired, reference should be made to the customer acceptance test given in Section TBD, "Testing and Troubleshooting," of the component maintenance manual for the appropriate unit. Refer to Figure TBD in the "Description and Operation" section of this manual for a list of related component maintenance manuals.

3. Equipment Changes and Markings

DASSAULT ELECTRONIQUE uses a standardized marking system to provide a means of identifying equipment that has changes incorporated. Refer to the front of the appropriate unit component maintenance manual for a list of Service Bulletins affecting the various units of the SATCOM system.

4. Storage

A. Short-time storage

All components may be stored or shipped in temperatures within the limits –40°C to +80° C. It is advisable to protect from extreme temperature variation which can cause excessive condensation. It is recommended that all components are unpacked immediately on delivery.

B. Long-time storage

For long-time storage, or unlimited storage, it is recommended that the antenna subsystem components be packaged as for shipment and that a suitable desiccant be placed in the container. Mark the packing date plainly on the container. An alternate method is to store the unit(s) in a location having a carefully controlled, low-humidity environment. Units which have been in unlimited storage should be visually inspected, cleaned, and the functional tested prior to return to service.

5. Repackaging for shipment

The shipping cartons for the JETSAT components have been carefully designed to protect during shipment, in compliance with ATA 300 Cat 2 recommendations or equivalent. These cartons and associated packing material should be used when repackaging for shipment. Attach a tag indicating the type of service required, return address, model number and full serial number. Mark the carton FRAGILE to ensure careful handling.

If the original shipping cartons are not available, the following general instructions should be used for repackaging with commercially available material.

- Wrap each component in heavy paper or plastic.
- Attach a tag indicating the type of service required, return address, model number and full serial number.
- Use a strong shipping container, e.g. a double walled carton.
- Protect the front and rear panel with cardboard and insert a 7 cm to 10 cm layer of shock absorbing material between all surfaces of the equipment and the sides of the container.
- Seal the shipping container securely.
- Mark the shipping container “FRAGILE” to ensure careful handling.

APPENDIX A

Top Mounted IGA Outline Drawing

Ref. : 3433-105E005

FCC ID: OYAJETSAT

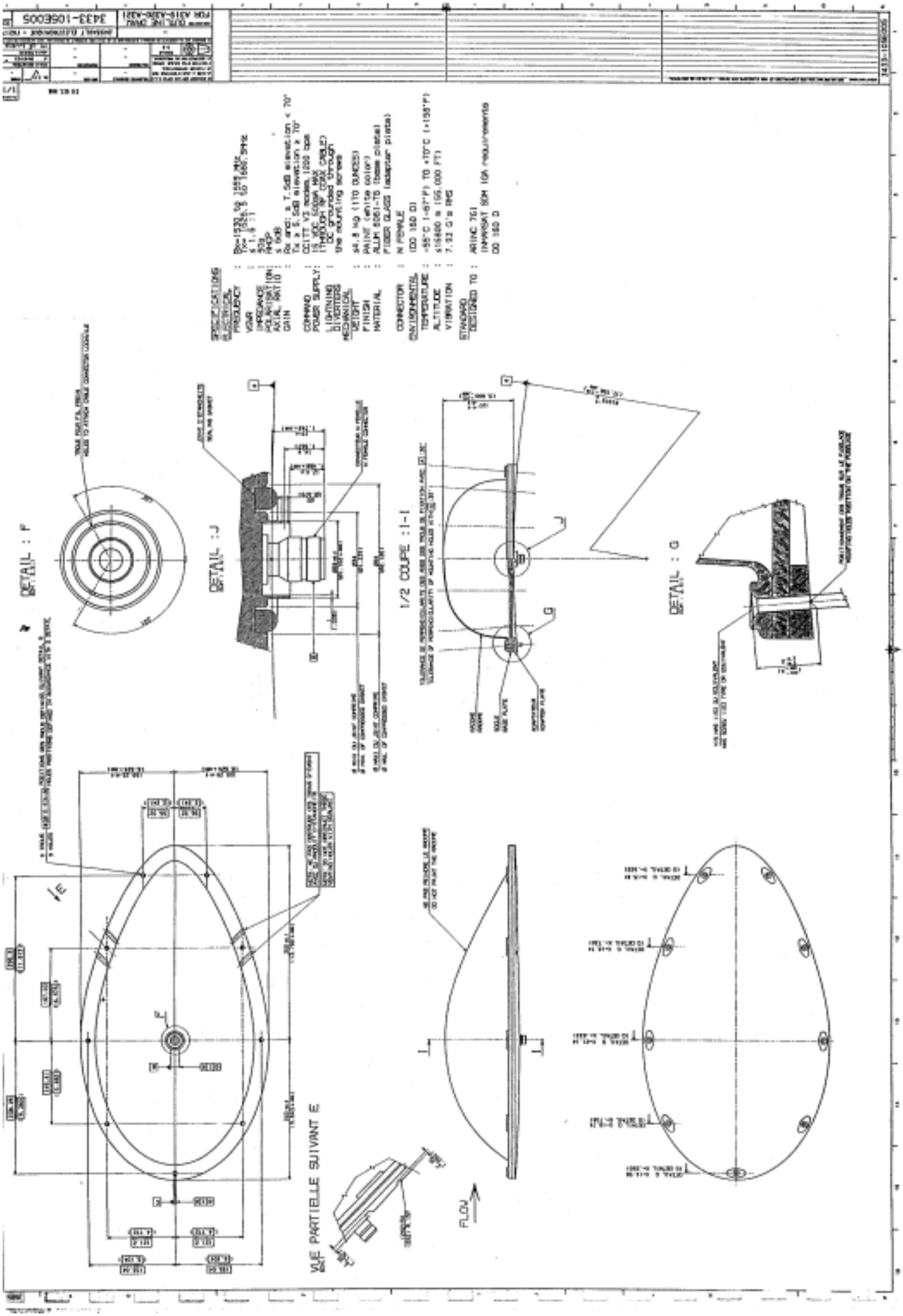

APPENDIX B

Tail Mounted IGA Outline Drawing

Ref. : 3433-105D006

FCC ID: OYAJETSAT

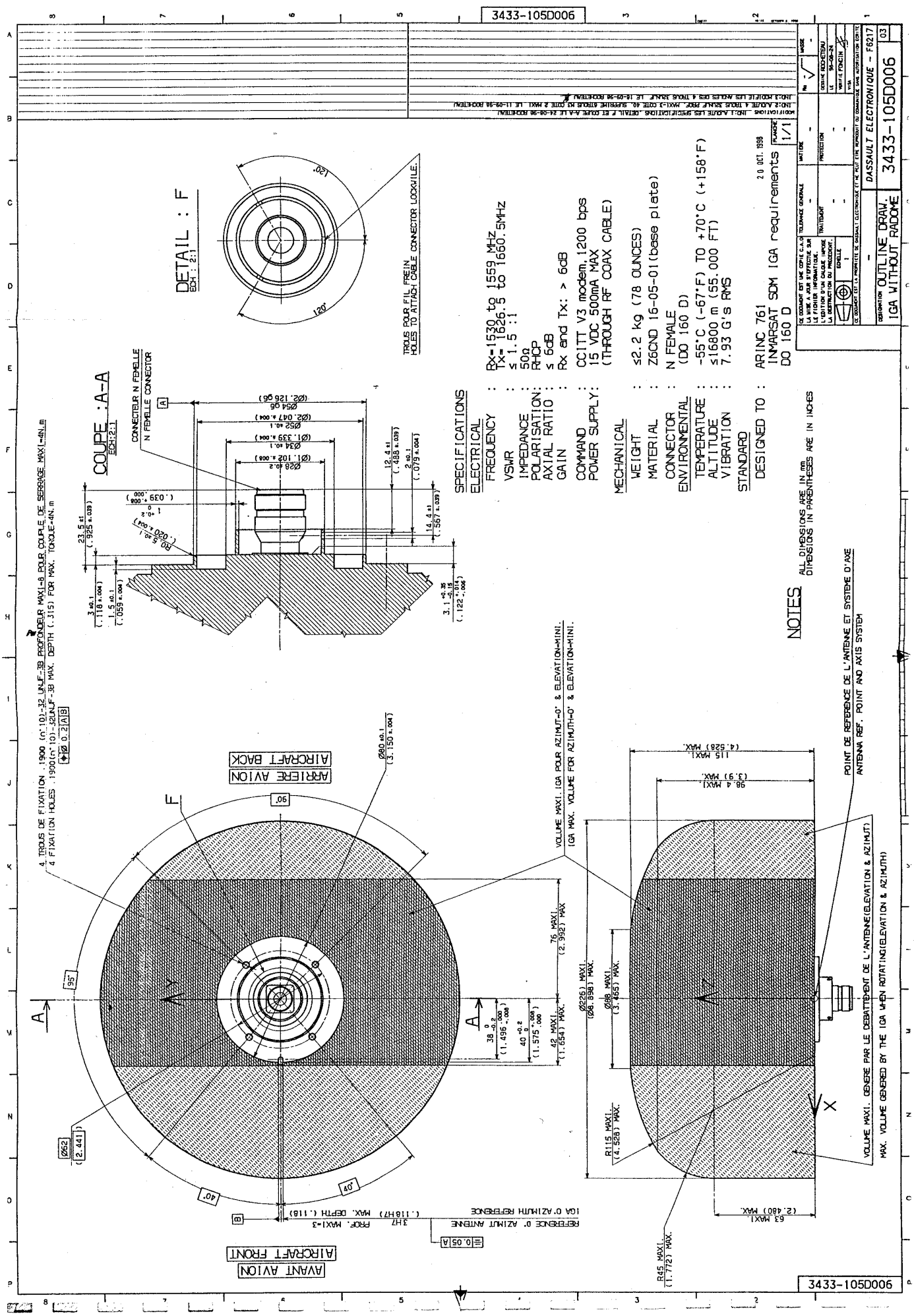

APPENDIX C

HLD Outline Drawing

Ref. : 3433-300E001

FCC ID: OYAJETSAT

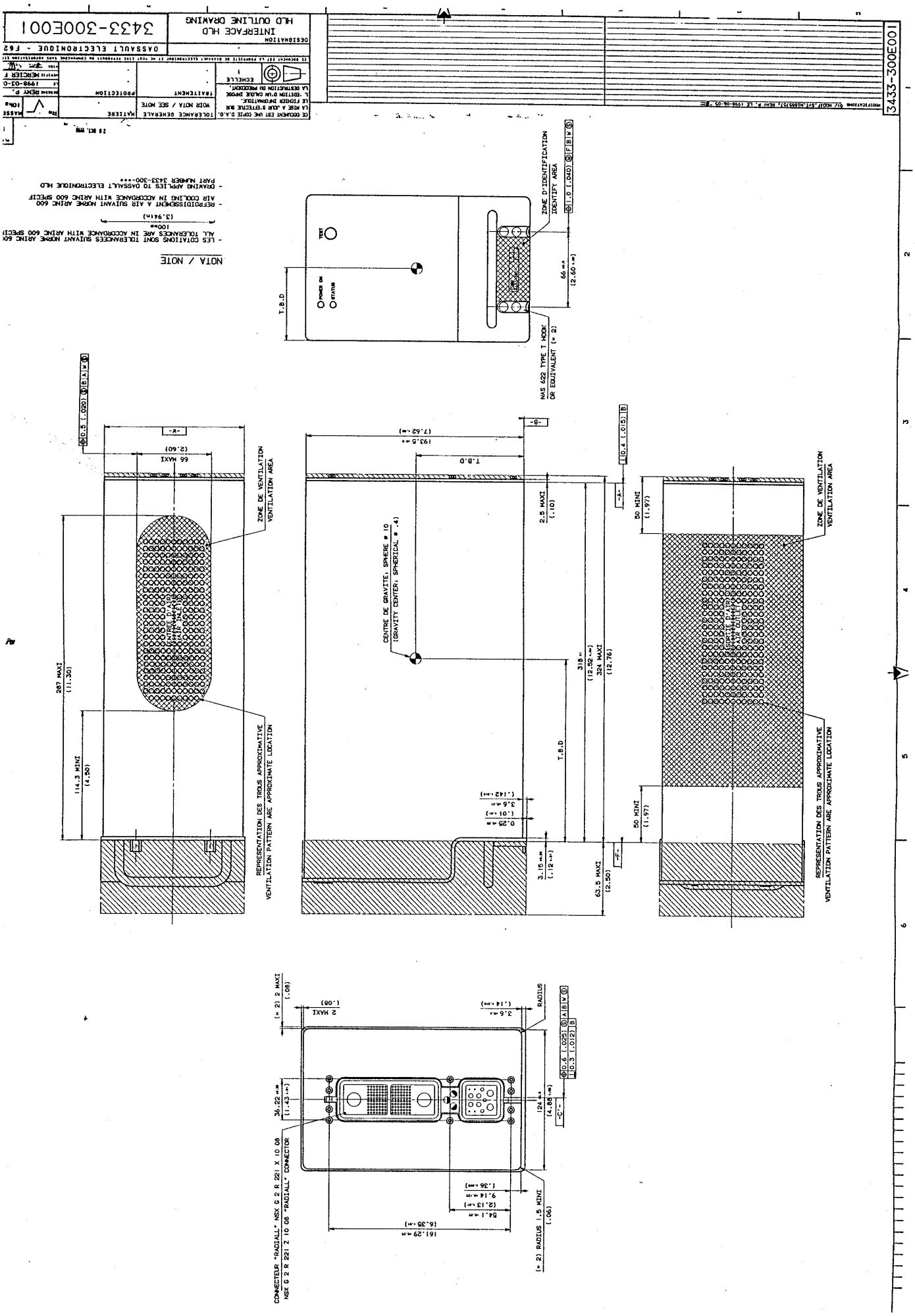

APPENDIX D

SDU Outline Drawing

Ref. : 3433-500E001

FCC ID: OYAJETSAT

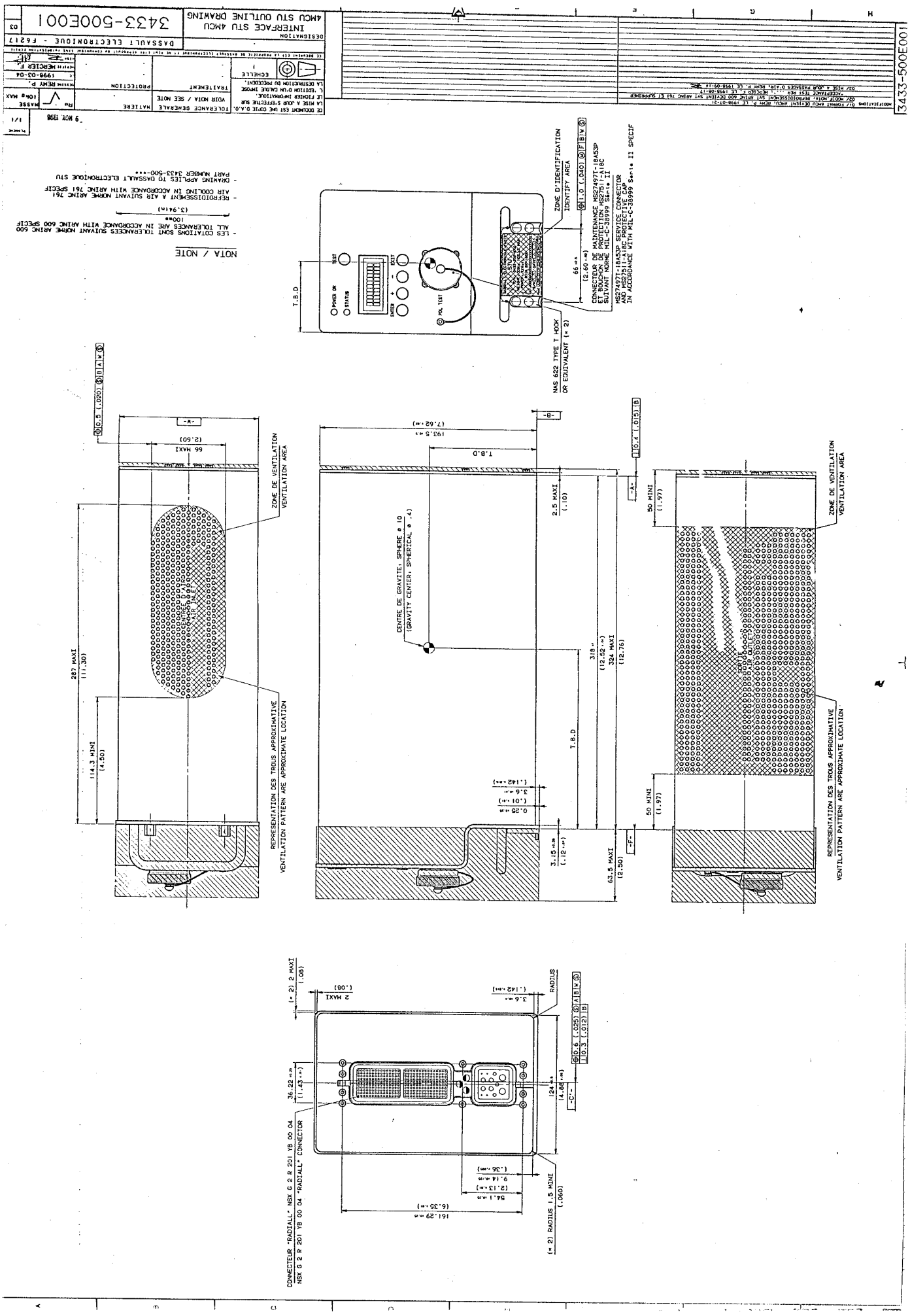

APPENDIX E

NRU-F Antenna Outline Drawing

Ref. : 3433-600B001

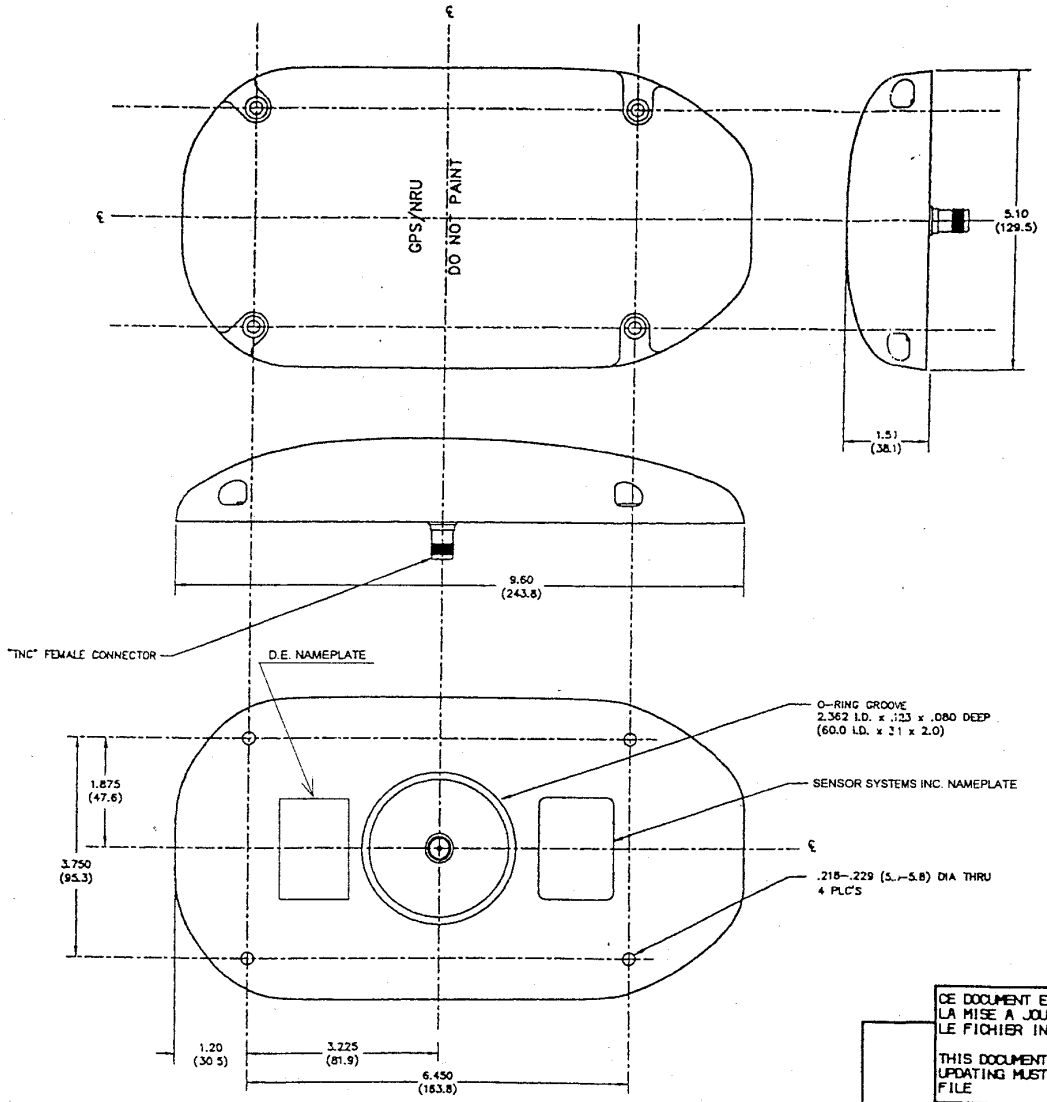

SPECIFICATIONS

ELECTRICAL – GPS ANTENNA

FREQUENCY	1575.42 ±2 MHz
VSWR	≤2.0 : 1
IMPEDANCE	50Ω
POLARIZATION	RHCP
AXIAL RATIO	≤3.0 dB (@ ZENITH)
POWER HANDLING	100 mW (+20 dBm)
GAIN (ANTENNA)	−1.0 dBic 0° ≤ θ ≤ 75° −2.5 dBic 75° < θ ≤ 80° −4.5 dBic 80° < θ ≤ 85° −7.5 dBic θ = 90° (@ HORIZON)
GAIN (PREAMPLIFIER)	26.0 ±3 dB
SUPPLY VOLTAGE	+12 TO +24 VDC @ 250 mA MAX
OUT OF BAND REJECTION	35 dB @ 1625 MHz
LIGHTNING	DC GROUNDED

ELECTRICAL – COMPASS

DATA CALCULATION RATE	5 Hz
BAUD RATE	4.8 K BAUD USING RS-232 C SERIAL TRANSMISSION
SUBCARRIER FREQUENCY	210 KHz
MODULATION LEVEL	250 mv pp

MECHANICAL

WEIGHT	24 OUNCES (680 GRAMS)
HEIGHT	1.50 INCH (38.1)
LENGTH	9.60 INCHES (243.8)
WIDTH	5.10 INCHES (129.5)
FINISH	SKYDROL RESISTANT ENAMEL COLOR: GLOSS WHITE #17925, PER FED-STD-595B BASE: IRIDITE PER MIL-C-5541
MATERIAL	ALUM 6061-T6, FIBERGLASS PER MIL-P-18177
CONNECTOR	TYPE "TNC" FEMALE

ENVIRONMENTAL

TEMPERATURE	−55°C (−67°F) TO +85°C (+185°F)
ALTITUDE	−100 TO 55,000 FT
VIBRATION	10 G's

FEDERAL AND MILITARY

DESIGNED TO:	ARINC 743 DO-160C MIL-C-5541 MIL-E-5400

NOTES: UNLESS OTHERWISE SPECIFIED
DIMENSIONS IN PARENTHESES ARE IN mm.

20 OCT. 1998

SENSOR SYSTEMS INC.
GPS/NRU ANTENNA
DE P/N 3433-600-000

MODIFICATIONS

CE DOCUMENT EST UNE COPIE C.A.O. LA MISE A JOUR S'EFFECTUE SUR LE FICHIER INFORMATIQUE.
THIS DOCUMENT IS A C.A.D. COPY UPDATING MUST BE DONE ON C.A.D. FILE

ECHELLE / SCALE (ORIGINAL): WITHOUT

TOLERANCES

TRAITEMENT / TREATMENT

MATIERE / MATERIAL: SEE NOTES

PROTECTION / PROTECTIVE FINISH: SEE NOTES

MASSE/MASS

DESSINE / DRAWN: ROCHETEAU
DATE: 98-08-13
VERIFIE / CHECKED: FONCIN
VISA

CE DOCUMENT EST LA PROPRIETE DE DASSAULT ELECTRONIQUE ET NE PEUT ETRE REPRODUIT OU COMMUNIQUE SANS AUTORISATION ECRITE
THIS DOCUMENT IS THE PROPERTY OF DASSAULT ELECTRONIQUE AND MAY NOT BE COPIED OR COMMUNICATED WITHOUT WRITTEN CONSENT

DASSAULT ELECTRONIQUE - F6217

DESIGNATION / TITLE: NRU-F ANTENNA

3433-600B001 — 00

FCC ID: OYAJETSAT

APPENDIX F

WH10 Analog Handset Outline Drawing

Ref. : 3433-850B001

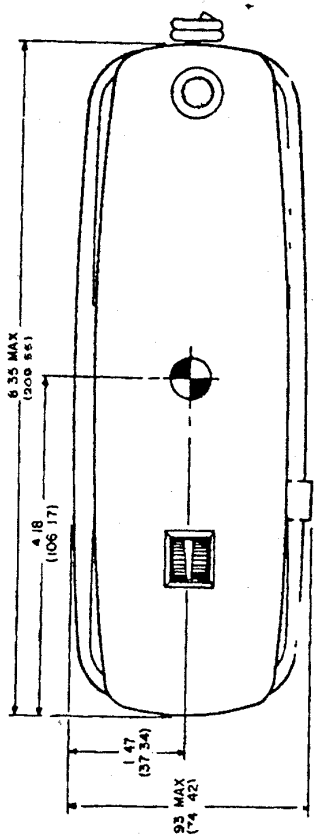

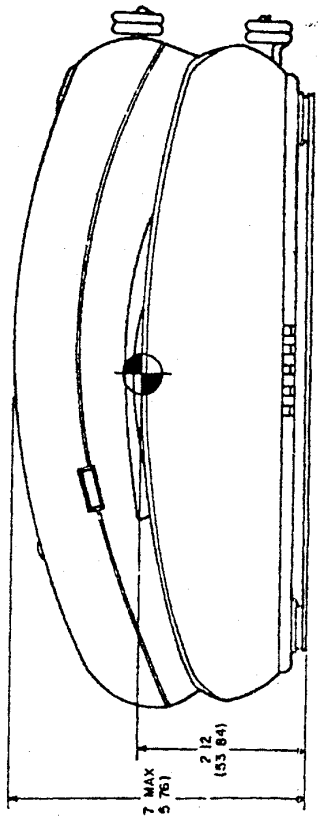

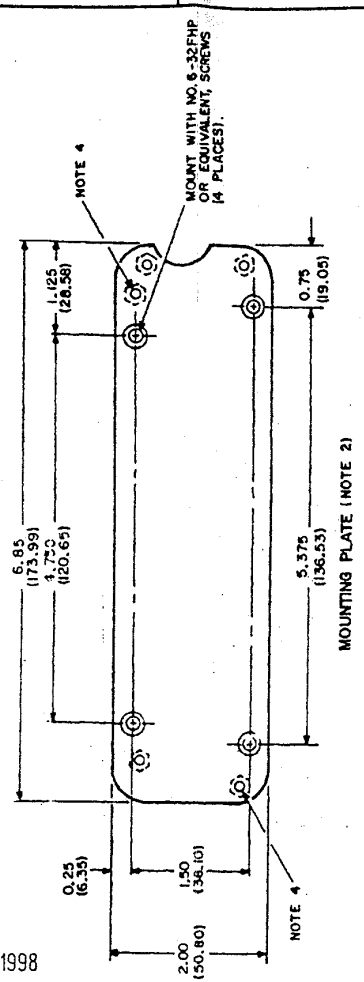

20 OCT. 1998

MODIFICATIONS

NOTES:

1. Dimensions in parentheses are in mm.
2. Mounting Plate viewed from the telephone side.
3. Weight: 1.4 lbs (0.63 kg)
4. Mounting Holes for WH-4, 5, and 6.

GLOBAL WULFSBERG SYSTEMS
WH-10 HANDSET
D.E. P/N 3433-850-000

CE DOCUMENT EST UNE COPIE C.A.O. LA MISE A JOUR S'EFFECTUE SUR LE FICHIER INFORMATIQUE. THIS DOCUMENT IS A C.A.D. COPY UPDATING MUST BE DONE ON C.A.D. FILE	TOLERANCES	MATIERE / MATERIAL	Ra ✓ MASSE/MASS
ECHELLE / SCALE (ORIGINAL) WITHOUT	TRAITEMENT / TREATMENT	PROTECTION PROTECTIVE FINISH	DESSINE DRAWN ROCHETEAU DATE 98-08-13 VERIFIE CHECKED FONCIN VISA

CE DOCUMENT EST LA PROPRIETE DE DASSAULT ELECTRONIQUE ET NE PEUT ETRE REPRODUIT OU COMMUNIQUE SANS AUTORISATION ECRITE
THIS DOCUMENT IS THE PROPERTY OF DASSAULT ELECTRONIQUE AND MAY NOT BE COPIED OR COMMUNICATED WITHOUT WRITTEN CONSENT

DASSAULT ELECTRONIQUE - F6217

DESIGNATION
TITLE
WH10 HANDSET

3433-850B001 00

FCC ID: OYAJETSAT

APPENDIX G

Digital Seat Mounted Handset Outline Drawing

Ref. : 3433-800B002

FCC ID: OYAJETSAT

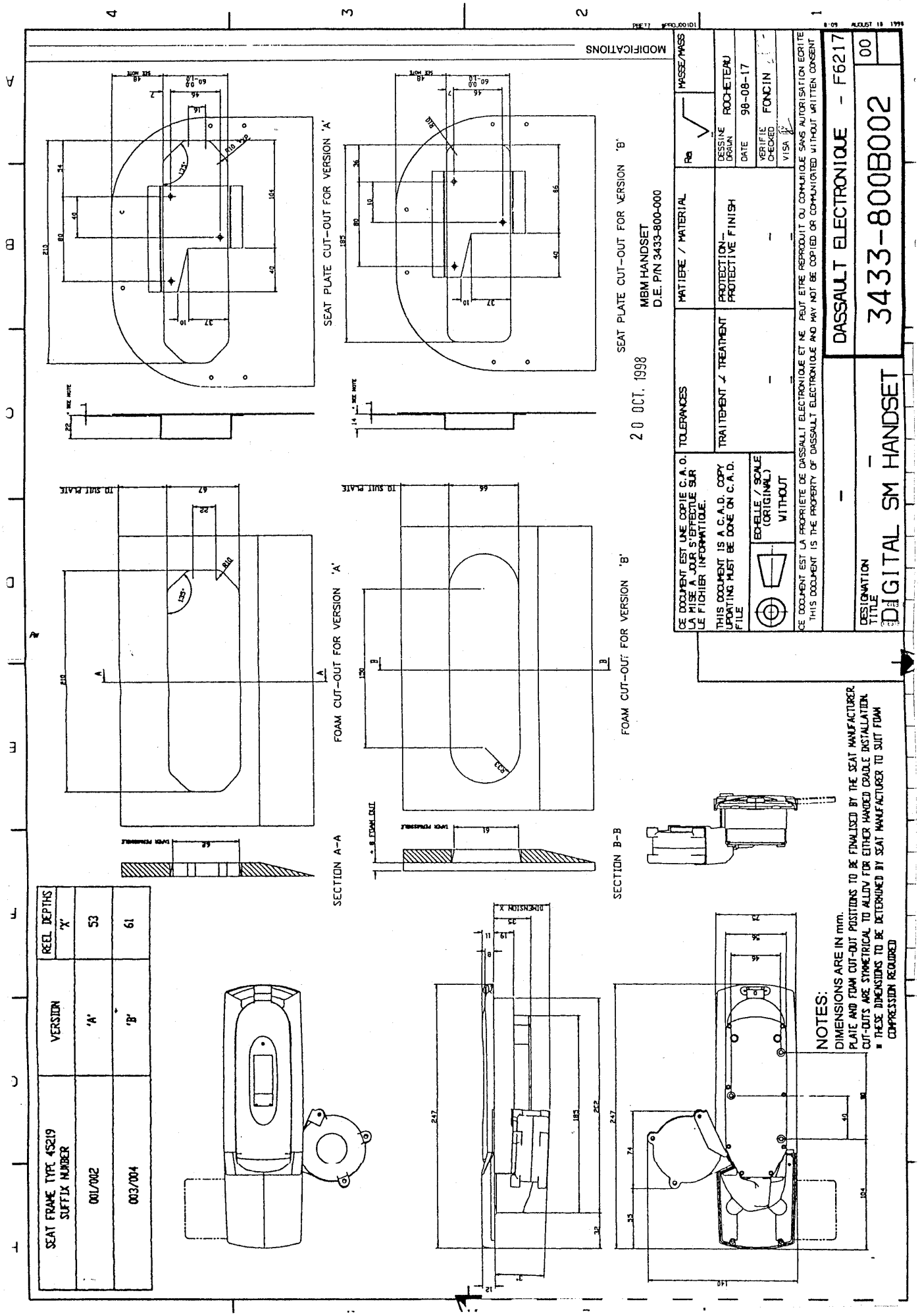

SEAT FRAME TYPE 45219 SUFFIX NUMBER	VERSION	REEL DEPTHS 'X'
001/002	'A'	53
003/004	'B'	61

APPENDIX H

Bulkhead Mounted Digital Handset Outline drawing

Ref. : 3433-800B001
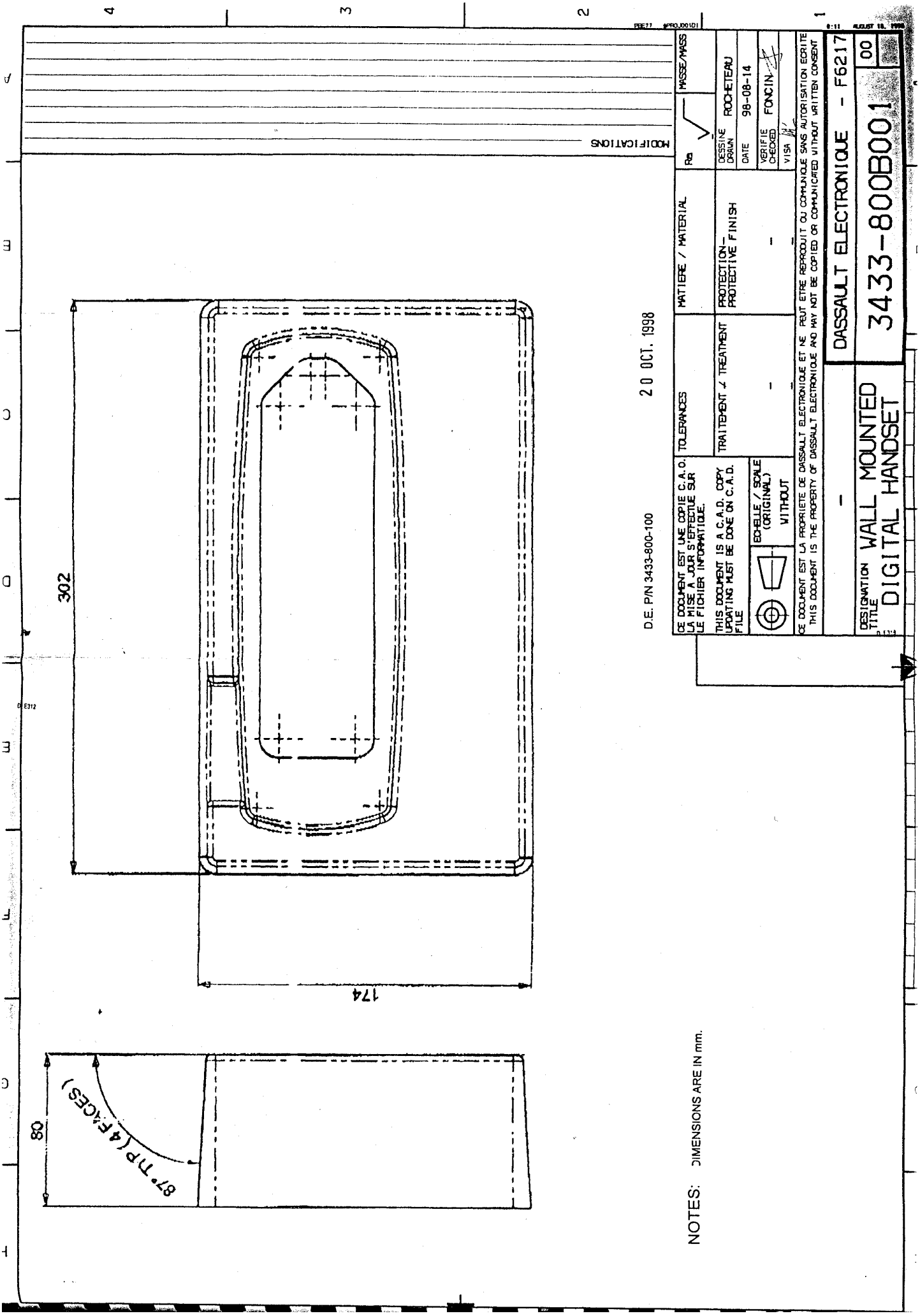
FCC ID: OYAJETSAT