User's Manual

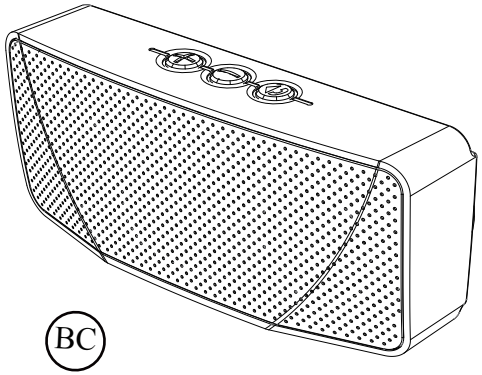

THANK YOU

Thank you for purchasing this Bluetooth® speaker (BT183). Before getting started please read the user's manual carefully to ensure proper operation and optimal performance of this product. This item is under multiple patents covering the appearance, advanced electronics and sound technology making this speaker the best choice to connect with your wireless devices.

FCC STATEMENT

This device complies with Part 15 of the FCC Rules. Operation is subject to the following two conditions: (1) this device may not cause harmful interference, and (2) this device must accept any interference received, including interference that may cause undesired operation.

This equipment has been tested and found to comply with the limits for a Class B digital device, pursuant to Part 15 of the FCC Rules. These limits are designed to provide reasonable protection against harmful interference in a residential installation. This equipment generates, uses, and can radiate radio frequency energy and, if not installed and used in accordance with the instructions, may cause harmful interference to radio communications. However, there is no guarantee that interference will not occur in a particular installation. If this equipment does cause harmful interference to radio or television reception, which can be determined by turning the equipment off and on, the user is encouraged to try to correct the interference by one or more of the following measures:

- □ Reorient or relocate the receiving antenna.
- □ Increase the separation between the equipment and receiver.
- □ Connect the equipment into a circuit different from that to which the receiver is connected.
- □ Consult the dealer or an experienced radio TV technician for help.Changes or modifications not evpressly approved by the party responsible for compliance could void the user's authority to operate the equipment

WARNING: This appliance is intended for domestic household use only and should not be used for any other purpose or in any other application, such as for non domestic use or in a commercial environment.

WARNING: The ventilation should not be impeded by covering the ventilation openings with items such as newspapers, table cloths, and curtains. Allow at least a 10 cm gap all around the product.

WARNING: No naked flame sources, such as lighted candles, should be placed on the speaker.

Precautions

Please store and use this product at room temperature.
Do not expose this product to rain or damp surroundings.
Prevent this product from falling as that could result in serious damage.
Do not dismantle, repair or modify this product on your own.
In order to avoid any risk, do not dispose this product inappropriately or toss it into the fire as there is a built-in lithium battery.

Tips

1) Do not turn up the volume to maximum for a long time as this could shorten the service life of this product or impair your hearing.
2) When encountering any fault during operation, please cut off the power supply and disconnect the USB cable to prevent further damage to the speaker or other components.
3) The Bluetooth transmission range or connectivity could be affected by low battery power. In that case, please recharge immediately.

Outer Appearance and Function Buttons

Multifunction Control Button

1. Jump to the next track/Turn up the volume: Press button (A) to select tracks or long press it to bring up the volume.

2. Jump to the last track/Turn down the volume: Press button (B) to select tracks or long press it to turn down the volume.

3. Pause/Play/Pick up the call: Press button (C) to pause, to resume normal operation or pick up the incoming calls.

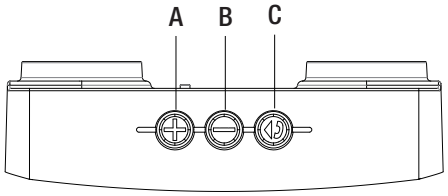

Part	Description
A	Turn up Volume/Next
B	Turn down Volume/Previous
C	Pause/Play/Pick up the call Button

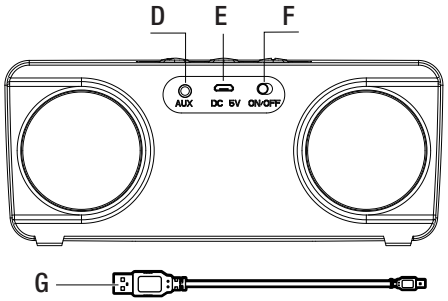

Part	Description
D	Audio In
E	Micro USB 5V
F	Power Switch
G	Charging Cable

Product Parameters

Part	Parameters
Product Model	BT183
Bluetooth Specifications	Bluetooth 2.1+EDR
Transmission Distance	≤10M (depending upon operation environment and devices to which it connects)
USB Recharge Voltage	DC 5V 500mAh
Built-in Battery	1050mAh
Output Power	3W×2
Product Dimensions	180 x 75 x 54mm

Common Function Description

Power-on Status: Switch the Power Button to turn the speaker on and it beeps simultaneously with the blue indicator flashing.

Bluetooth Connection: Once switched on, the speaker starts searching for other Bluetooth technology equipped devices automatically and at the same time, the blue indicator flashs. When Bluetooth technology equipped device is found, the speaker prompts whether to pair up or not. If selected Yes, it pairs up with the device and meanwhile, the blue indicator flashes slowly and the speaker beeps. If failed to detect any other Bluetooth technology equipped device within 5 minutes, the speaker will shut itself down. Turn it back on again to start search. All the paired devices will engage automatically the next time.
Hints: Please recharge when the battery is low, otherwise it may fail to connect.

Music Playback: When connected, the speaker plays immediately. Press (A) and (B) to select tracks upwards or downwards.
Long press (A) and (B) to adjust the volume. While playing music, press (C) to pause and resume.

Call Pick-up: After connected with the cellphone successfully, the speaker beeps when a call comes in. Press (C) to pick it up; and to terminate conversation, press (C) one more time.

AUX Playback: Use the supplied audio cable to connect the speaker to another music player such as computer by plugging one end to the speaker's AUX port and the other end to the music player's audio port. When the music player starts playing music, the speaker sounds right away. Tracks can be selected and volume adjusted only by the music player.
Note: 3 buttons of (A), (B) and (C) are functionless in the AUX playback mode and the volume is controlled by the music player.

Intelligent Quick Recharge: Recharge can be performed in the standby mode or power-off situation. Before recharging, plug the micro-USB end of the supplied USB cable to the speaker's USB port and the other end to the USB port of the computer or the USB recharger. When fully recharged, the red indicator goes off.

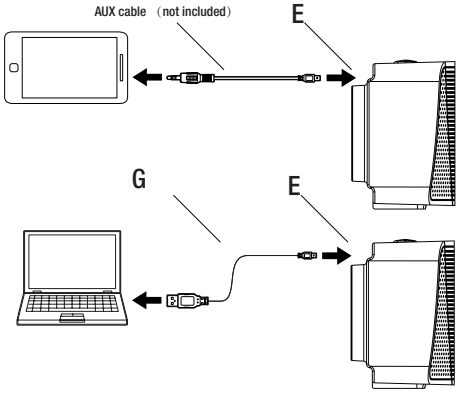

Compatibility

This speaker is compatible with most Bluetooth technology equipped devices configured with Buletoot 2.1+EDR or higher version. This would include most tablets, smart phones or computers that support Bluetooth 2.1+EDR which consists of protoclos like A2DP, AVRCP and HFP.

Trouble Shooting

Faults / Phenomena	Solutions
Unable to pair up with other devices	1. Check whether the speaker is still in the process of search or switch it off and then on. 2. There are too many Bluetooth devices in the proximity that cause difficulty in connection. Please turn them off.
The sound is rather low or distorted	1. Check the Bluetooth device's volume and then adjust it to a proper level. 2. Recharge the battery.
The music stops from time to time	1. Check whether the speaker's effective transmission range is exceeded or there is an obstacle standing between the speaker and other Bluetooth devices.
The Bluetooth indicator remains off	1. It suggests the battery power drops quite low and retry once being recharged. 2. Turn it on again.

The Bluetooth® word mark and logos are registered trademarks owned by the Bluetooth SIG, Inc. and any use of such marks by Dongguan Taide Industrial Co., Ltd. is under license. Other trademarks and trade names are those of their respective owners.