INTERNATIONAL TECHNOLOGIES

(FCC Registration Number: 90701) 3 Adelphia Lane, Chester Springs, PA 19425, USA

Tel: (610) 827-3031 Fax: (610) 827-3032

FCC MEASUREMENT REPORT

For

Miller Edge, Inc.

Gate and Door edge Transmitter and Receiver Kit

Model MWCK01

Test and evaluation performed by

International Technologies

Report No.: ME-030721-FCC

Agency Declaration/Disclaimer

International Technologies reports apply only to the specific samples tested under stated test conditions. It is the manufacturer's responsibility to assure that additional production units of this model are manufactured with identical electric and mechanical components. International Technologies shall have no liability for any deductions, inferences or generalizations drawn by the client or others from International Technologies issued reports.

This report is the confidential property of the client. As a mutual protection to our clients, the public and ourselves, extracts from the test report shall not be reproduced except in full without our written approval.

This report is to comply the FCC Rules in accordance CFR 47, Part 15 Subpart B and C, not related to any grant or submissions.

Document Title	FCC Measurement Report Miller Edge, Inc. Gate and Door Edge Transmitter and Receiver Kit Model MWCK01
Number	ME-030721-FCC
Revision	0
Date	July 21, 2003

Table of Contents

SUMMARY of MEASURMENT REPORT…….5
Purpose 5
Result 5
1. General Information 6
1.1. Equipment Units Tested (EUT) Description 6
1.2. Related Submittal(s) / Grant(s) 6
1.3. Tested System Details 6
1.4. Applicable Standard 7
1.5. Location of Test Site 7
2. EUT Labeling 8
2.1. FCC Label 8
2.2. Location of Label on EUT 8
3. System Test Configuration and Justification 9
3.1. EUT Operation Mode and Test Justification 9
3.2. EUT Exercise Software 9
3.3. General and Special Conditions 9
3.4. EUT Modifications 9
3.5. Cable Configurations 9
4. Block Diagram of EUT 10
4.1. Block Diagram Description 10
5. Conducted Measurement Procedures 11
5.1. Conducted Test Set-up 11
5.2. Preliminary Conducted Test 11
5.3. Final Conducted Test 11
6. Radiated Measurement Procedures 12
6.1. Radiated Test Set-up 12
6.2. Preliminary Radiated Test 12
6.3. Final Radiated Test 12
7. Conducted Emissions Data 13
7.1. Receiver Conducted Data 13
8. Radiated Emissions Data 14
8.1. Receiver and Transmitter Radiated Data 14
8.2. Field Strength Calculation 15
8.3. Table of Correction Factors 16
9. List of Test Equipment 17
10. Label and Manual Information 18
10.1. Labeling Requirement 18
10.2. Information to User 18
11. Laboratory Accreditation 19

APPENDICES

Appendix A	-	FCC Declaration of Conformity
Appendix B	-	Measurement Data Sheets
Appendix C	-	Photographs of EUT
Appendix D	-	Photographs of Test Setup
Appendix E	-	EUT Block Diagram and Schematics
Appendix F	-	Operation Manual

SUMMARY OF MEASUREMENT REPORT

PURPOSE

This measurement report describes the electromagnetic emissions tests performed and the results obtained on the Equipment Units Tested (EUT) described herein. It is based on the emission data measured by International Technologies personnel according to the ANSI C63.4-2001 procedure to determine whether the electromagnetic emissions from the EUT are within the Class B specification limits defined by FCC Part 15 Subpart B and C Rules and Regulations.

EUT: Miller Edge, Inc.
Model No.: MWCT01; Transmitter and MWCR01; Receiver
Serial No.: Engineering Proto #1

Manufacture: Miller Edge, Inc.
P.O. Box 159
West Grove, PA 19390

Test Location: International Technologies
3 Adelphia Lane
Chester Springs, PA 19425

Test Date: July 14-15, 2003

RESULT

The measurement result, provided with this report, indicate that the electromagnetic emissions from the EUT are within the class B specification limits defined by FCC Part 15 Subpart B and C Rules and Regulations.

The measurement data and conclusions are a true and accurate representation of the electromagnetic emissions characteristics of the test sample described in this report.

Report prepared by Yong Park July 21, 2003

Yong Park, EMC Certified Engineer

1. GENERAL INFORMATION

1.1. Equipment Units Tested (EUT) Description

The Miller Edge gate transmitter and receiver are designed to provide obstacle-sensing protection for a variety of motorized gate and doors. They easily mounted and wired to the gate or door edge sensor. When the sensing edge comes into contact with an obstruction a closed circuit signal is created and is sent to the transmitter. The transmitter relays the information to the receiver and the receiver passes the message along to the operator motor. The gate or door stops movement instantaneously and will then reverse the direction of travel. The transmitter is with a faulty condition feature that activates when the battery is approximately 7 volts, indicating the battery should be replaced.

The Model MWCT01 has three major sections: Transmitter, Cut-off and Alarm. The transmitter section is generating between 315 and 318MHz of encoded RF signal. The Cut-off section is automatically cut off the encoded RF signal to two (2) seconds after transmitting. The Alarm section is giving a fault condition when a battery becomes low. The receiver has a 4 MHz and a 4.89 MHz crystal and it powered by 24 volt AC or DC. The transmitter has a 4 MHz crystal and it is utilizing a 9 volts lithium battery.

Both of the transmitter and receiver comes with a weatherproof polycarbonate enclosure. The overall dimension of transmitter enclosure is 1 3/4” H x 5 5/8” L x 1 3/4” W and The overall dimension of receiver enclosure is 4 13/16” H x 3 3/4” W x 1 3/4” D.

The photographs of transmitter are provided in Appendix C.

1.2. Related Submittal(s) / Grant(s)

This submission is not related to any other grants or submissions.

1.3. Tested System Details

Following equipments are used as a host or/and exerciser in the compliance test. Details of cable description are in Section 3.5.

DESCRIPTION	MANUFACTURER	MODEL #	SERIAL #	CABLES/DESCRIPTION
Transmitter (**EUT**)	Miller Edge	MWCT01	Engineering Proto	No cable
Receiver (**EUT**)	Miller Edge	MWCR01	Engineering Proto	8 of AWG #20 wires 0.9 m length cable
Wall mount AC Adaptor	Radio Shack	240544	Unknown	24 VAC supply cable, 1.8m length
Impedance Load Terminal	Homemade	Unknown	Unknown	8 of AWG #20 wires 0.9 m length cable

1.4. Applicable Standard

Radiated and conducted testing was performed according to the procedures in ANSI C63.4-2001. Radiated testing was performed at an antenna distance of 3 meters. The frequency range of the test was 30.0 MHz to 10 GHz for the radiated emission test and 450 KHz to 30 MHz for the conducted emission test.

1.5. Location of Test Site

The open area test site used to collect the radiated data is located at International Technologies (FCC Registration Number: 90701) in Pennsylvania. This site meets the requirements in Section 5 of ANSI C63.4-2001 and has been fully described in a report filed to the FCC.

2. EUT LABELING

2.1. FCC Label

The FCC Notice is in the Unit Operation manual and the FCC statement word is on the label. The following is a sample of the FCC ID label to be used on the EUT.

Model No.: MWCT01 or MWCR01

Part No.:

Ser. No.:

This device is complies with Part 15 of the FCC Rules.

Operation is subject to the following two conditions:

(1) This device may not cause harmful interference, and

(2) This device must accept any interference received,

including interference that may cause undesired operation.

Complies with Part 15, FCC Rules.

FCC ID: OYE-MWCK01

2.2. Location of Label on EUT

The location of the FCC compliance label is at the rear of EUT for receiver unit and at the bottom of EUT for transmitter. The location of label is shown on EUT photograph in Appendix C.

3. SYSTEM TEST CONFIGURATION AND JUSTIFICATION

3.1. EUT Operation Mode and Test Justification

The receiver was tested in a configuration whereby all of the available input/output impedance matched loads are attached and functional. The receiver operates a 24 VAC external wall mount ac adaptor power source. The chosen operating mode fully exercises and duplicates all normal activity that may be expected by a user. This operation provides the worst case for EMC, in that all devices on EUT are active and working normally.

The transmitter was only performed radiated emission test. Because of the transmitter operates with an internal 9 volts potable battery. Therefore, no conducted emission testing was performed for the transmitter.

3.2. EUT Exercise Software

No software was used to exercise the test sample.

3.3. General and Special Conditions

No alternate test method or special accessories were used to achieve compliance.

3.4. EUT Modifications

No modification was required to achieve compliance.

3.5. Cable Configurations

Followings are cables used in the compliance test.

a. AC Adaptor cable; Power to receiver, unshielded 2 conductor cable, one end fix to wall mount ac adaptor.

b. 8 of AWG #20 wires; Connect between receiver and load terminal, unshielded 1 conductor wire.

4. BLOCK DIAGRAM OF EUT

4.1. Block Diagram Description

The block diagram and schematics of EUT are provided in Appendix E.

5. CONDUCTED MEASUREMENT PROCEDURES

5.1. Conducted Test Set-up

The HP 8546A EMI receiver was used as a measuring meter. The data was collected with the EMI receiver in the quasi-peak detect mode with the "Max Hold" feature activated. The LISN output was read by the EMI receiver. The unconnected output of LISN was terminated by a 50-ohm termination. The effective measurement bandwidth used for the conducted emissions test was 9 kHz.

The EUT was configured as a system with full capacity of I/O cables connected in according to the ANSI C63.4-2001. The EUT was setup as tabletop equipment as shown in the photographs of Appendix D.

The conducted test for the tabletop EUT was performed on a 1.0 by 1.5 meter non-metallic top with wooden post test bench, which is set up at the open area test site with a 2m by 2m, vertical conducting surface located 0.4 meter to the rear of the EUT. The test bench has its top surface 0.8-meter above the ground plane. The EUT was set up on the test bench. The EUT was powered through the LISN bonded to the ground plane. The LISNs power was filtered and the filter was bonded to the ground plane.

5.2. Preliminary Conducted Test

The test data was taken in manual mode to investigate the worst emission configuration. While scanning the frequencies in the ranges of 0.45 to 1.6 MHz, 1.6 to 5 MHz and 5 to 30 MHz, the conducted emissions from the EUT were investigated for maximizing operating mode as well as cable and peripheral placement. Once a predominant frequency, which is within 20 dB of the limit, was found, it was more closely examined with the EMI receiver span adjusted to 1 MHz.

5.3. Final Conducted Test

Based on the preliminary tests, the EUT configuration was set for the highest emission level and data was collected under manual control with EMI receiver. The EMI receiver collected the maximum quasi-peak readings over each spectrum. The six highest emission levels and corresponding frequencies are in Section 7. Also the full data of conducted emissions is provided in Appendix B.

6. RADIATED MEASUREMENT PROCEDURES

6.1. Radiated Test Set-up

The HP 8546A EMI receiver was used as a measuring meter. The EMI receiver was used in the quasi-peak detect mode with the "Max Hold" feature activated. In this mode, the EMI receiver records the highest measured reading over all the sweeps. The effective measurement bandwidth used for the radiated emissions test was 120 kHz.

Broadband biconical, log periodic and double ridged guide antennas were used as transducers during the measurement. The frequency spans were wide to 30 - 88 MHz, 88 - 216 MHz, 216 - 300 MHz, 300 - 1000 MHz and 1 to 10 GHz during preliminary investigations, however, the final data was taken with a frequency span of 1 MHz. Furthermore, the frequency span was reduced during the preliminary investigations as deemed necessary. The EUT was mounted on the 0.8 m high non-conductive table, which stand on the turntable. The turntable is remote controlled using a motor and supporting the EUT permits EUT rotation over 360 degrees to determine the highest emission levels. The antenna mast allowed height variation of the antenna at to maximize the emissions. The EUT was configured as a system with full capacity of I/O cables connected in according to the ANSI C63.4-2001. The EUT was setup as tabletop equipment as shown in the photographs of Appendix D.

6.2. Preliminary Radiated Test

Preliminary testing was done at a distance of 1 meter, to determine the predominant frequencies from the system and to investigate the EUT configuration that produced the maximum levels of emissions.

Broadband antennas were used to scan large frequency bands. If and when any frequency was found to be within 20 dB of the limits level, this frequency was recorded as a significant frequency. All significant frequencies were further examined carefully at a reduced frequency span on the EMI receiver, while optimizing EUT orientation.

6.3. Final Radiated Test

The open field test site was used for radiated emission testing. This test site is setup according to the ANSI C63.4-2001 and the site attenuation data has been filed with the FCC.

The EUT was tested at a 3-meter distance. The receiving antenna was mounted on the antenna mast, which has a motor allowing antenna height control and polarization. The antenna height was then varied from 1 to 4 meter to find the highest level of radiated emission at each frequency found during the preliminary test described above.

The presence of ambient signals was verified by turning the EUT off. In case an ambient signal is detected, the measurement bandwidth was reduced temporarily and verification was made that an additional adjacent peak did not exist. This ensures that the ambient signal does not hide emission frequency from the EUT.

The EMI receiver was manually operated and the manual scan techniques were used to collect final data. The six highest emission readings and the corresponding frequencies are listed in Section 8. Also the full data of radiated emissions is provided in Appendix B.

7. CONDUCTED EMISSIONS DATA

7.1. Receiver Conducted Data

The following data was collected using a HP 8546A EMI receiver with 9 kHz bandwidth. The six highest emissions are listed in the table. The full data sheet is provided in Appendix B.

Wire	Frequency	Reading	FCC Limit	Margin	Remarks
	MHz	DBuV	dBuV/m	dB	
Line 1	0.45	20.2	48	-27.8	Quasi-Peak
Line 1	1.05	9.6	48	-38.4	Quasi-Peak
Line 2	6.07	13.7	48	-34.3	Quasi-Peak
Line 2	0.45	18.8	48	-29.2	Quasi-Peak
Line 2	1.05	8.3	48	-39.7	Quasi-Peak
Line 2	6.07	25.6	48	-22.4	Quasi-Peak

8. RADIATED EMISSIONS DATA

8.1. Receiver and Transmitter Radiated Data

The following data was collected using a HP 8546A EMI receiver with 120 kHz bandwidth. The six highest emissions are listed in each table. The correction factor is included cable, antenna, and pre-amplifier corrections. The full data sheet is provided in Appendix B.

Receiver Radiated Emissions Data

Followings are six highest ambient signals which are presented in during the testing. No emissions are detected from the EUT in frequency range 30 to 1000 MHz.

Ant Pol.	Freq.	Raw Read	Corr. Factor	Net Read	FCC Limit	Margin	Azimuth	Antenna Height	Remarks
H/V	MHz	dBuV	dB	DBuV/m	dBuV/m	dB	Degree	Meter	
H	65.7	41.2	10.8	52.0	N/A	N/A	0	2.0	Ambient
H	211.6	45.7	15.2	60.9	N/A	N/A	0	2.0	Ambient
H	493.2	37.4	23.2	60.6	N/A	N/A	0	2.0	Ambient
H	561.3	46.5	24.6	71.1	N/A	N/A	0	2.0	Ambient
H	675.2	40.4	26.9	67.3	N/A	N/A	0	2.0	Ambient
H	729.2	47.9	27.8	75.7	N/A	N/A	0	2.0	Ambient

Transmitter Radiated Emissions Data

Ant Pol.	Freq.	Raw Read	Corr. Factor	Net Read	FCC Limit	Margin	Azimuth	Antenna Height	Remarks
H/V	MHz	dBuV	dB	DBuV/m	dBuV/m	dB	Degree	Meter	
H	315	49.5	19.0	68.5	74.5	-6.0	2.1	65	Fundamental
H	630	27.9	25.7	53.6	62.0	-8.4	1.8	120	2nd harmonic
H	945	14.5	31.3	45.8	62.0	-16.2	1.6	95	3rd harmonic
V	315	49.9	19.0	68.9	74.5	-5.6	1.2	85	Fundamental
V	630	28.2	25.7	53.9	62.0	-8.1	1.1	140	2nd harmonic
V	945	14.8	31.3	46.1	62.0	-15.9	1.1	165	3rd harmonic

8.2. Field Strength Calculation

The field strength is calculated by adding the Antenna Factor and Cable Factor, and subtracting the Amplifier Gain from the measured reading. The basic equation with a sample calculation is as follows:

FS = RA + AF + CF+ (-AG)

Where:

FS = Field Strength
RA = Receiver Amplitude
AF = Antenna Factor
CF = Cable Attenuation Factor
AG = Amplifier Gain

Assume a receiver reading of 52.5 dBuV is obtained. The Antenna Factor of 7.4 and a Cable Factor of 1.1 is added. The Amplifier Gain if 29 dB is subtracted, giving a field strength of 32 dBuV/M. The 32 dBuV/m value was mathematically converted to its corresponding level in uV/m.

FS = 52.5 +7.4 + 1.1 - 29 = 32 dBuV/m

Level in uV/m = Common Antilogarithm {(32 dBuV/m)/20} = 39.8 uV/m

This is done in the data tables by lumping the cable, antenna and pre-amp into one factor called "Corr" and adding it to the "raw" reading from the receiver.

8.3. Table of Correction Factors

Frequency in MHz	Cable CF in dB	Antenna CF in dB	Total CF in dB
30.00	1.2	14.4	15.6
35.00	1.3	12.6	13.9
40.00	1.4	12.0	13.4
45.00	1.5	12.4	13.9
50.00	1.6	12.1	13.7
60.00	1.6	10.5	12.1
70.00	1.8	8.0	9.8
80.00	1.9	7.5	9.4
90.00	2.0	9.6	11.6
100.00	2.1	12.3	14.4
120.00	2.2	14.7	16.9
140.00	2.4	13.0	15.4
160.00	2.6	15.1	17.7
180.00	2.7	16.7	19.4
200.00	2.9	17.2	20.1
200.00	2.9	12.5	15.4
225.00	2.9	12.1	15.0
250.00	3.0	13.2	16.2
275.00	3.3	14.1	17.4
300.00	3.5	15.4	18.9
350.00	3.7	15.4	19.1
400.00	4.0	16.9	20.9
450.00	4.3	17.9	22.2
500.00	4.5	18.9	23.4
550.00	5.1	19.4	24.5
600.00	5.2	19.8	25.0
650.00	5.4	20.7	26.1
700.00	5.6	22.0	27.6
750.00	5.9	22.0	27.9
800.00	5.9	22.2	28.1
850.00	6.2	23.7	29.9
900.00	6.6	24.1	30.7
950.00	6.8	24.6	31.4
990.00	6.8	25.4	32.2
1000.00	6.9	25.6	32.5
1100.00	7.4	25.2	32.6
1200.00	7.7	25.5	33.2
1300.00	8.1	25.8	33.9
1400.00	8.7	26.1	34.8
1500.00	8.9	26.5	35.4
1600.00	9.5	27.1	36.6
1700.00	9.7	27.7	37.4
1800.00	10.1	28.3	38.4
1900.00	10.3	28.9	39.2

9. LIST OF TEST EQUIPMENT

Equipment	Manufacture	Model	Serial No.	Last Cal. Date	Cal. Interval
EMI Receiver RF Section	Hewlett Packard	85462A	3325A00158	03/Mar/03	1 year
RF Filter Section	Hewlett Packard	85460A	3330A00163	03/Mar/03	1 year
LISN	Solar	8012-50-R-24-BNC	0905	08/31/02	1 year
LISN	Fisher	CUSTOM	0528	08/31/02	1 year
Antenna Biconical	EMCO	3104	3455	30/Jun/03	1 year
Antenna Log Periodic	EMCO	3146	1915	30/Jun/03	1 year
Antenna D/R guide	EMCO	3115	3935	28/Feb/03	1 Year
Antenna Mast	Pacific Arepco	DAPM4/6	N/A	N/A	N/A
Turntable	Pacific Arepco	TT1000	N/A	N/A	N/A

10. LABEL AND MANUAL INFORMATION

10.1. Labeling Requirement

In accordance with the Section 15.19 of FCC Rules, a permanently attached label shall be affixed to the every product in a conspicuous location with the following statement:

"This device complies with Part 15 of the FCC Rules. Operation is subject to the following two conditions: (1) This device may not cause harmful interference, and (2) this device must accept any interference received, including interference that may cause undesired operation."

(a) For a Class A digital device or peripheral, the instructions furnished the user shall include the following or similar statement, placed in a prominent location in the text of the manual:

"Note: This equipment has been tested and found to comply with the limits for a Class A digital device, pursuant to Part 15 of the FCC Rules. These limits are designed to provide reasonable protection against harmful interference when the equipment is operated in a commercial environment. This equipment generates, uses, and can radiate radio frequency energy and, if not installed and used in accordance with the instruction manual, may cause harmful interference to radio communications. Operation of this equipment in a residential area is likely to cause harmful interference in which cause the user will be required to correct the interference at his own expense."

(b) For a Class B digital device or peripheral, the instructions furnished the user shall include the following or similar statement, placed in a prominent location in the text of the manual:

"Note: This equipment has been tested and found to comply with the limits for a Class B digital device, pursuant to Part 15 of the FCC Rules. These limits are designed to provide reasonable protection against harmful interference in a residential installation. This equipment generates, uses and can radiate radio frequency energy and, if not installed and used in accordance with the instructions, may cause harmful interference to radio communications. However, there is no guarantee that interference will not occur in a particular installation. If this equipment does cause harmful interference to radio or television reception, which can be determined by turning the equipment off and on, the user is encouraged to try to correct the interference by one or more of the following measures:

-Reorient or relocate the receiving antenna.

-Increase the separation between the equipment and receiver.

-Connect the equipment into an outlet on a circuit different from that to which the receiver is connected.

-Consult the dealer or an experienced radio/TV technician for help."

10.2. Information to User

The users manual or instruction manual for an intentional or unintentional radiator shall caution the user that changes or modifications not expressly approved by the party responsible for compliance could void the user's authority to operate the equipment.

11. LABORATORY ACCREDITATION

FEDERAL COMMUNICATIONS COMMISSION
Laboratory Division
7435 Oakland Mills Road
Columbia, MD. 21046

November 15, 2000

Registration Number: 90701

International Technologies
3 Adelphia Lane
Chester Springs, PA 19425

Attention: Yong Park

Re: Measurement facility located at Chester Springs
3 & 10 meter site
Date of Listing: November 15, 2000

Gentlemen:

Your submission of the description of the subject measurement facility has been reviewed and found to be in compliance with the requirements of Section 2.948 of the FCC Rules. The description has, therefore, been placed on file and the name of your organization added to the Commission's list of facilities whose measurement data will be accepted in conjunction with applications for Certification under Parts 15 or 18 of the Commission's Rules. Please note that this filing must be updated for any changes made to the facility, and at least every three years from the date of listing the data on file must be certified as current.

If requested, the above mentioned facility has been added to our list of those who perform these measurement services for the public on a fee basis. An up-to-date list of such public test facilities is available on the Internet on the FCC Website at WWW.FCC.GOV, E-Filing, OET Equipment Authorization Electronic Filing.

Sincerely,

Thomas W Phillips
Electronics Engineer

Appendix A
FCC Declaration of Conformity

FCC Declaration of Conformity

Not Transferable

Verification is hereby issued to the named GRANTEE and is valid ONLY for the equipment identified hereon for use under the rules and regulations listed below.

Name of Grantee: Miller Edge, Inc.

Name of Product: Gate and Door Edge Transmitter and Receiver Kit

Model Number: MWCK01

Applicable Regulation: FCC Part 15 Subpart B and C, Class B

Date of Declaration: July 21, 2003

This device complies with Part 15 of the FCC rules. Operation is subject to the following two conditions: (1) this device may not cause harmful interference, and (2) this device must accept any interference received, including interference that may cause undesired operation

Appendix B
Measurement Data Sheets

Transmitter Radiated Emissions Data

Date: 07/14/03
Tested Site: International Technologies
Measuring Apparatus: Biconical Antenna for 30 MHz to 200 MHz
Log-Periodic Antenna for 200MHz to 1GHz
Double Ridged Guide Antenna for 1 to 10 GHz
EUT:Transmitter, model MWCT01 , Ser No.:Eng. Proto
Config.: EUT with Edge sensor
Compliance Spec.: FCC Part 15, Class B at 3m

Subpart B	Subpart C
30 to 88 MHz: 40 dBuV/m	Fundamental (315 MHz): 74.5 dBuV
88 to 216 MHz: 43.5 dBuV/m	Spurious (Above470 MHz): 62.0 dBuV
216 to 960 MHz: 46 dBuV/m	
Above 960 MHz: 54 dBuV/m	

Note: All values are in quasi-peak detection mode.

Test Site	Ant. V or H	Freq. MHz	Raw Read dBuV	CF dB	Net Read dBuV/m	Limit dBuV/m	Margin dB	Ant.-height /Azimuth	comment
Radiated Emissions Data for Surbpart C									
o	H	315.00	49.5	19.0	68.5	74.5	-6.0	2.1/65	Fundamental
o	H	630.00	27.9	25.7	53.6	62.0	-8.4	1.8/120	2nd harmonic
o	H	954.00	14.5	31.3	45.8	62.0	-16.2	1.6/95	3rd harmonic
o	H	1260.00	No detected						4th harmonic
o	H	1575.00	No detected						5th harmonic
o	H	1890.00	No detected						6th harmonic
o	H	2205.00	No detected						7th harmonic
o	H	2520.00	No detected						8th harmonic
o	H	2835.00	No detected						9th harmonic
o	H	3150.00	No detected						10th harmonic
o	V	315.00	49.9	19.0	68.9	74.5	-5.6	1.2/45	Fundamental
o	V	630.00	28.2	25.7	53.9	62.0	-8.1	1.1/140	2nd harmonic
o	V	954.00	14.8	31.3	46.1	62.0	-15.9	1.1/115	3rd harmonic
o	V	1260.00	11.1	33.6	44.7	62.0	-17.3	1.2/95	4th harmonic
o	V	1575.00	No detected						5th harmonic
o	V	1890.00	No detected						6th harmonic
o	V	2205.00	No detected						7th harmonic
o	V	2520.00	No detected						8th harmonic
o	V	2835.00	No detected						9th harmonic
o	V	3150.00	No detected						10th harmonic

Radiated Emissions Data for Surbpart B

Note: No emissions detected in the frequency range 30 to 2000 MHz for Subpart B.

Receiver Radiated Emissions Data

Date: 07/15/03
Tested Site: International Technologies
Measuring Apparatus: Biconical Antenna for 30 MHz to 200 MHz
Log-Periodic Antenna for 200MHz to 1GHz
EUT:Receiver, model MWCR01, Ser No.:Eng. Proto
Config.: EUT with impedance matched load
Compliance Spec.: FCC Part 15, Class B at 3m
Subpart B
30 to 88 MHz: 40 dBuV/m
88 to 216 MHz: 43.5 dBuV/m
216 to 960 MHz: 46 dBuV/m
Above 960 MHz: 54 dBuV/m

Scanned in frequency range from 30 MHz to 1 GHz
No emissions are detected from the EUT
Followings are six higest ambient signals which are presented in during the testing

Note: All values are in quasi-peak detection mode.

Test	Ant.	Freq.	Raw Read	CF	Net Read	Limit	Margin	Ant.-height	comment
Site	V or H	MHz	dBuV	dB	dBuV/m	dBuV/m	dB	/Azimuth	
o	H	65.80	41.2	10.8	52.0	40.0	12.0	Ambient	
o	H	211.60	45.7	15.2	60.9	43.5	17.4	Ambient	
o	H	493.20	37.4	23.2	60.6	46.0	14.6	Ambient	
o	H	561.30	46.5	24.6	71.1	46.0	25.1	Ambient	
o	H	675.20	40.4	26.9	67.3	46.0	21.3	Ambient	
o	H	729.20	47.9	27.8	75.7	46.0	29.7	Ambient	

Receiver Conducted Emissions Data

Date: 07/14/03

Tested Site: International Technologies

Measuring Apparatus: HP 8546A EMI Receiver and Solar LISN

EUT: Receiver, model MWCR01, Ser No.: Eng. Proto

Config. EUT with impedance matched load

Compliance Spec: FCC Part 15, Class B

450KHz to 30 MHz: 48 dBuV

All values are in quasi-peak detection mode.

Wire	Frequency	Reading	Limit	Margin	Net Read	FCC Limit	comment
	MHz	dBuV	dBuV	dB	uV	uV	
Line 2	0.45	20.20	48.0	-27.8			
Line 2	1.05	9.60	48.0	-38.4			
Line 2	6.07	13.70	48.0	-34.3			
Line 2	12.35	7.10	48.0	-40.9			
Line 2	24.10	5.20	48.0	-42.8			
Line 1	0.45	18.80	48.0	-29.2			
Line 1	1.05	8.30	48.0	-39.7			
Line 1	6.07	25.60	48.0	-22.4			
Line 1	12.35	8.20	48.0	-39.8			
Line 1	24.10	6.30	48.0	-41.7			

Appendix C
Photographs of EUT

Receiver, Open View

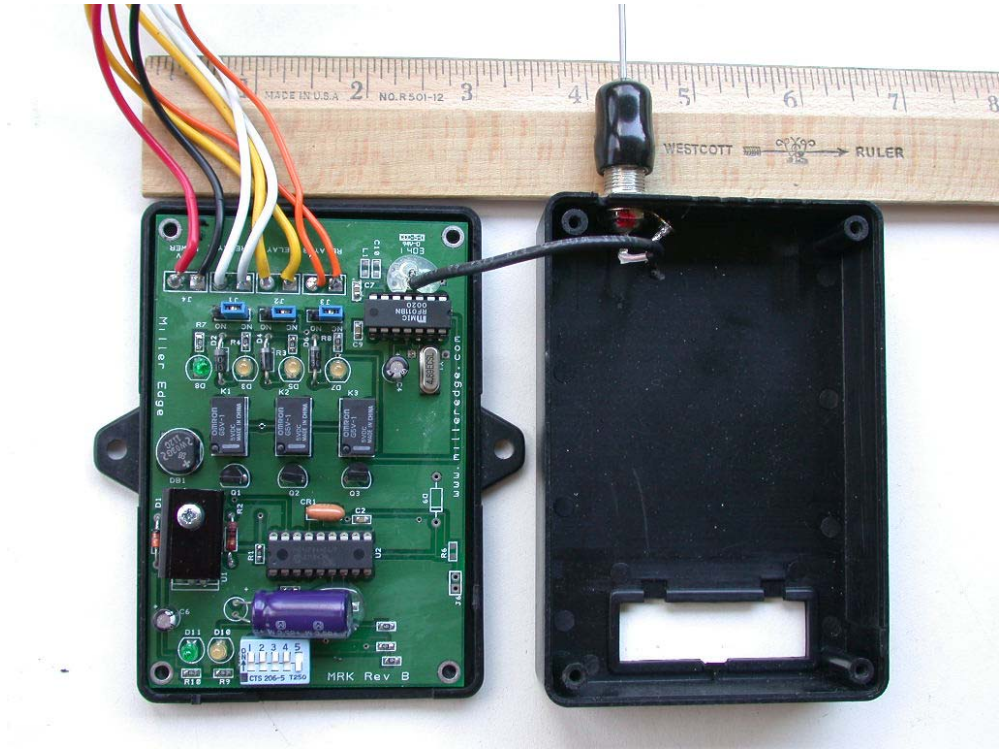

Receiver, FCC Label Location

Receiver, Component Side of Printed Circuits Board

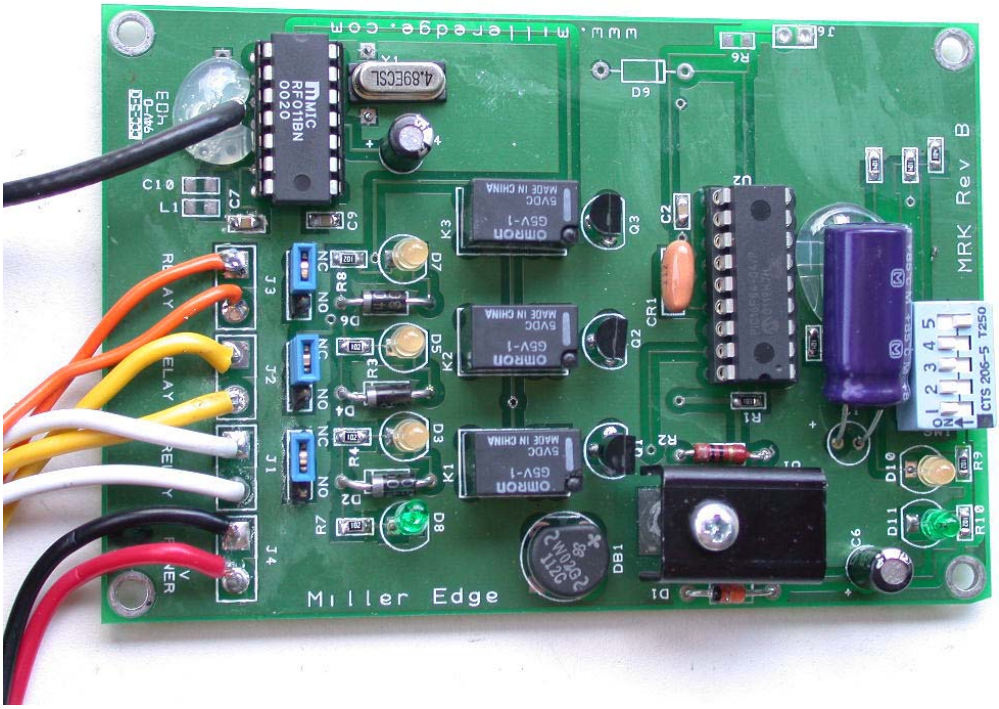

Receiver, Circuit Side of Printed Circuits Board

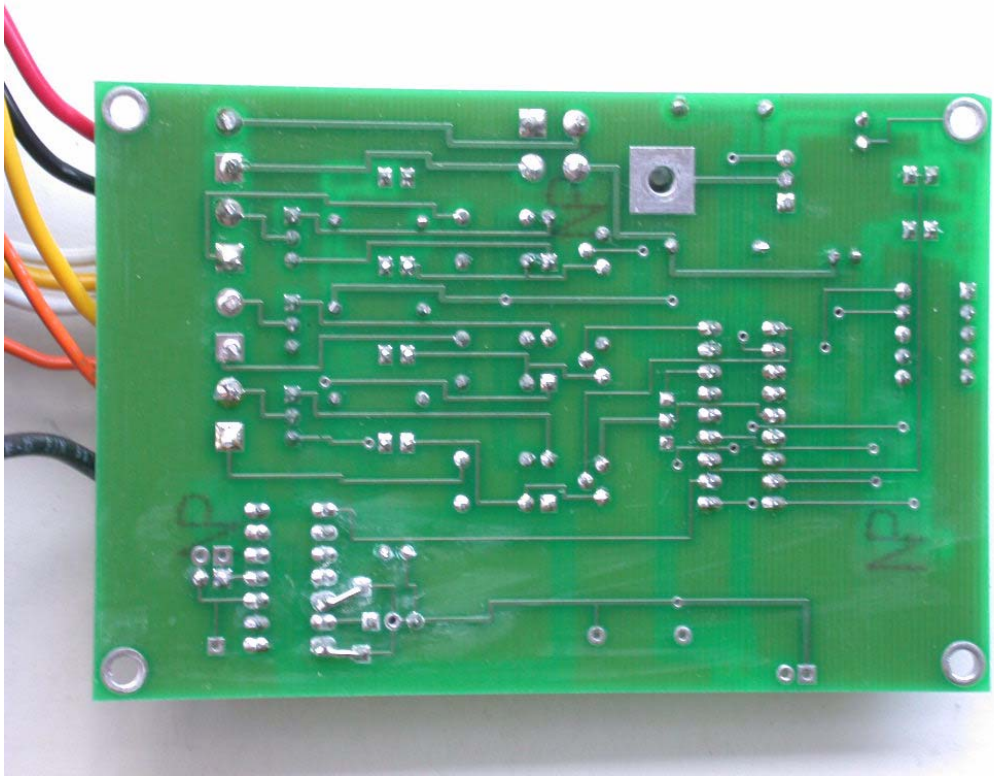

Transmitter, Open View

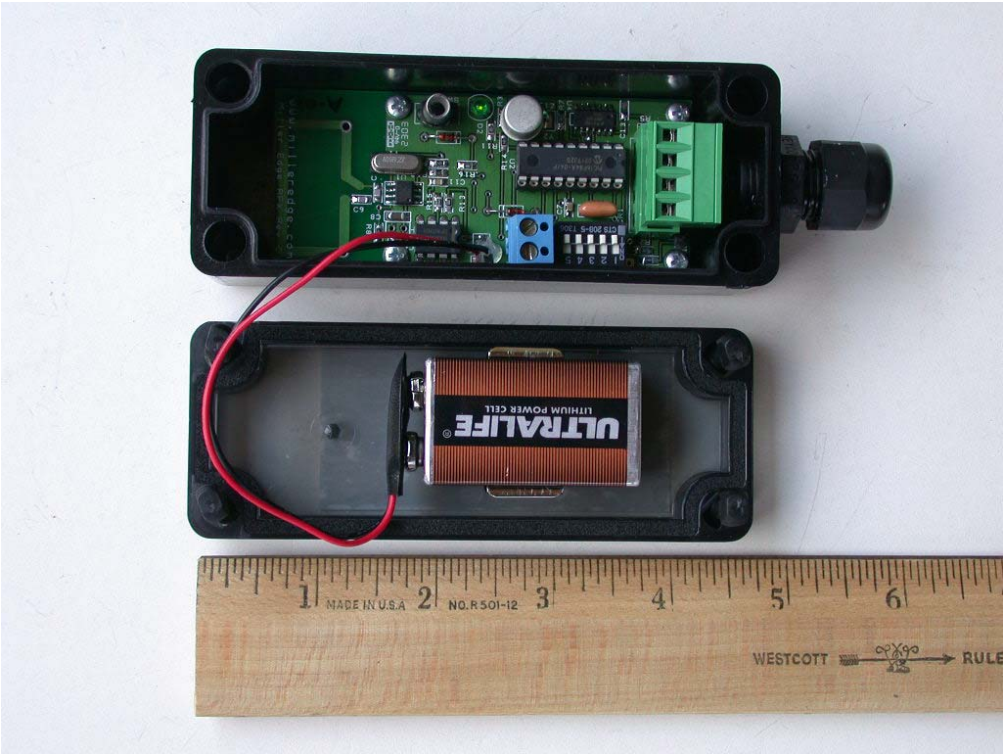

Transmitter, FCC Label Location

Transmitter, Component Side of Printed Circuits Board

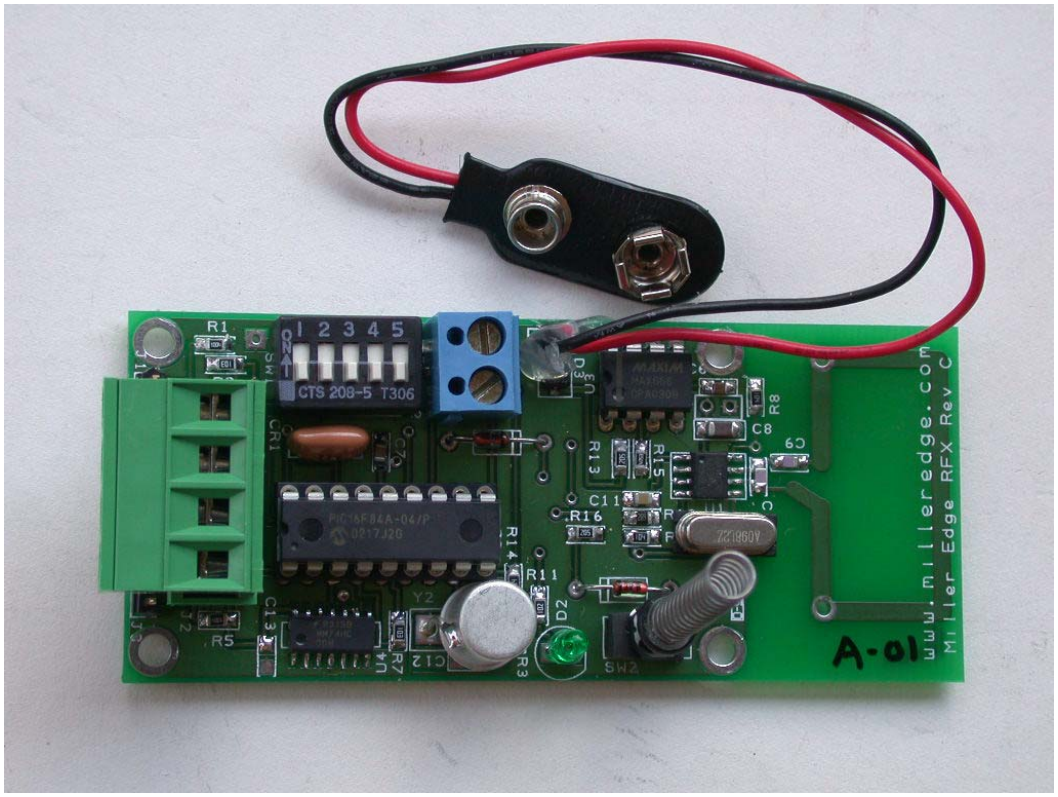

Transmitter, Circuit Side of Printed Circuits Board

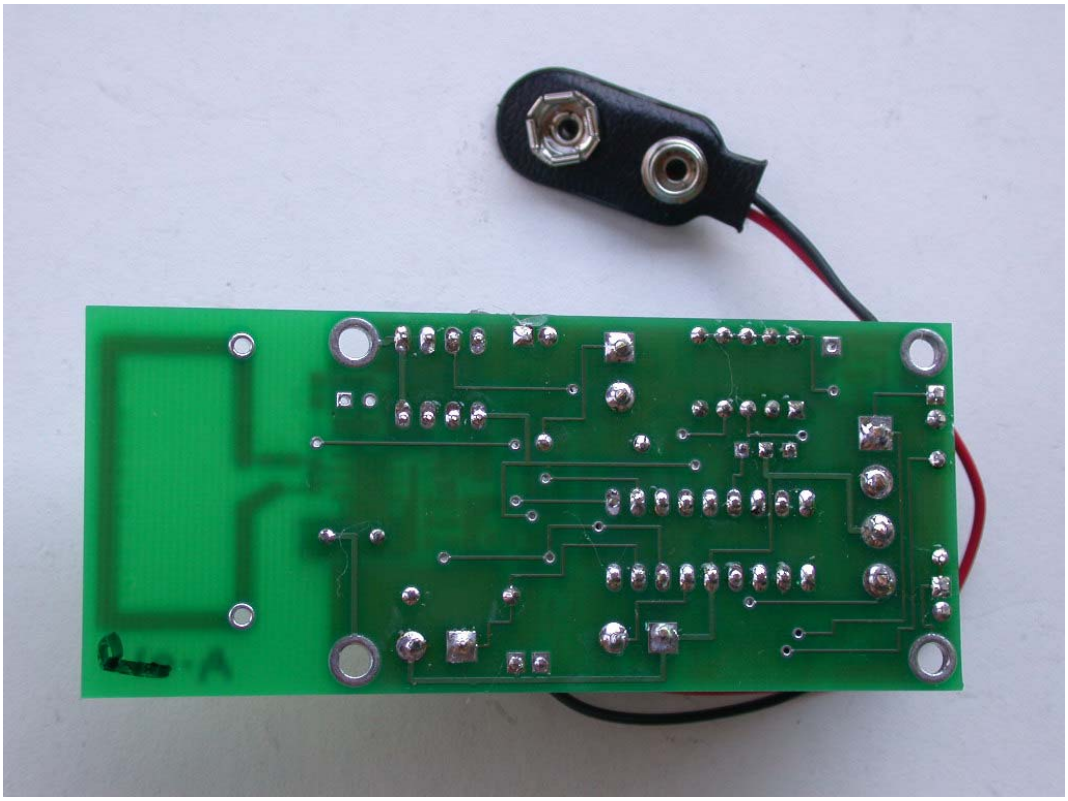

Appendix D
Photographs of Test Setup

Radiated Test Set-up for Receiver

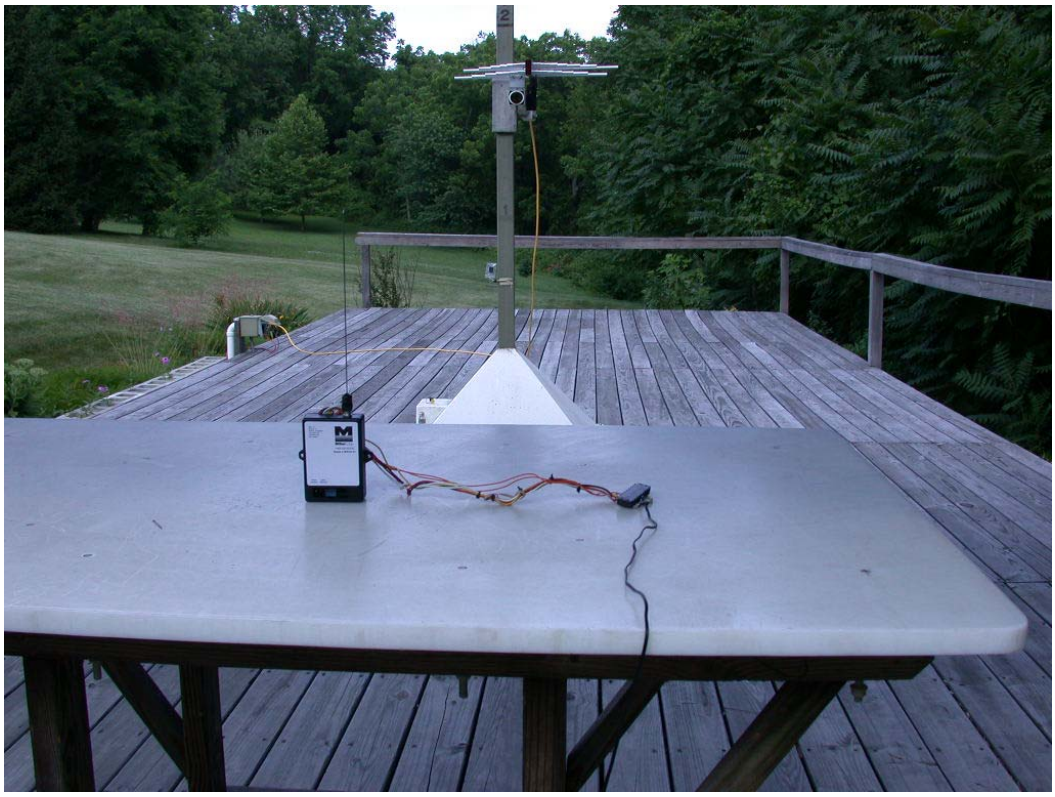

Conducted Test Set-up for Receiver

Radiated Test Set-up for Transmitter

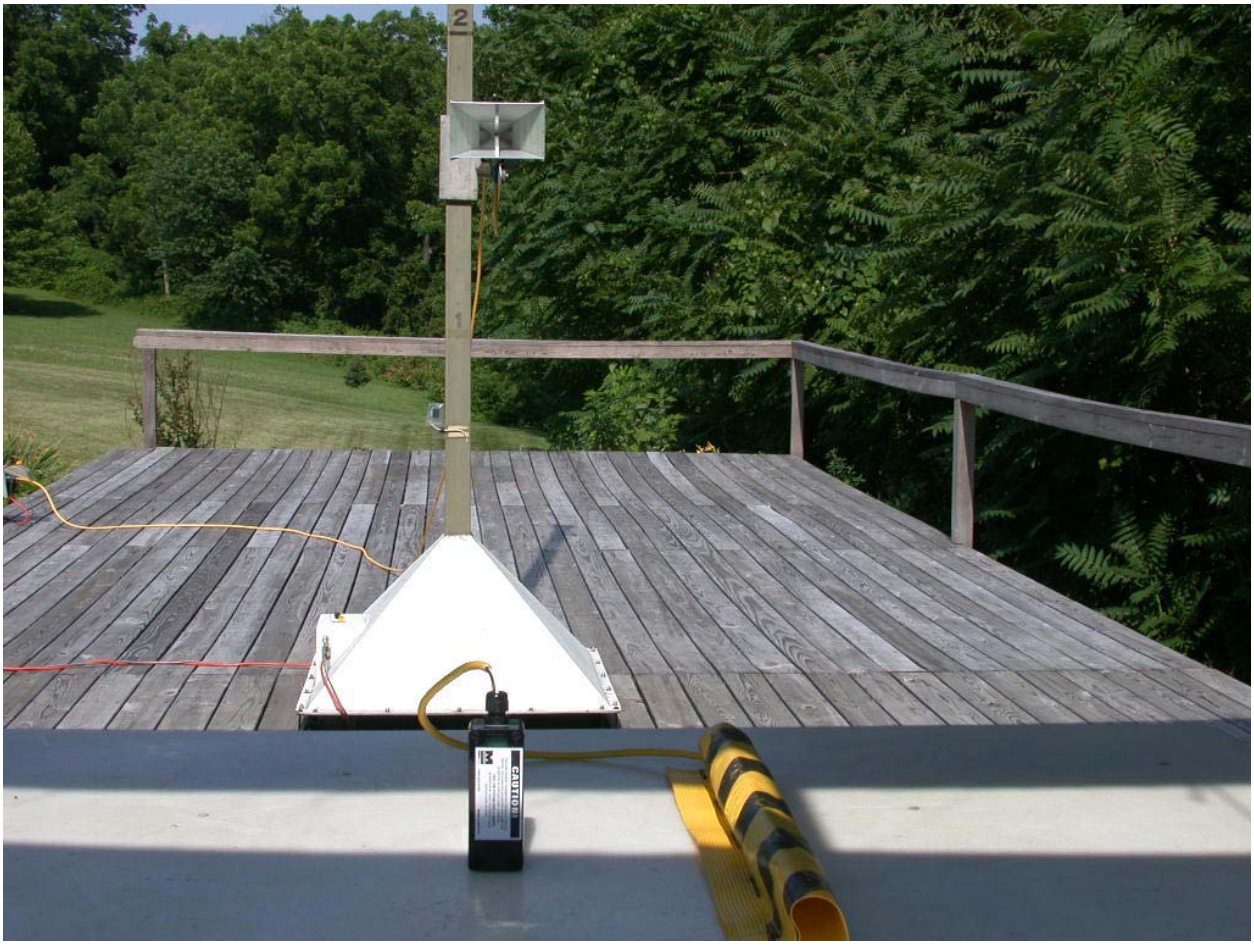

Appendix E
EUT Block Diagram and Schematics

RECEIVER BLOCK DIAGRAM

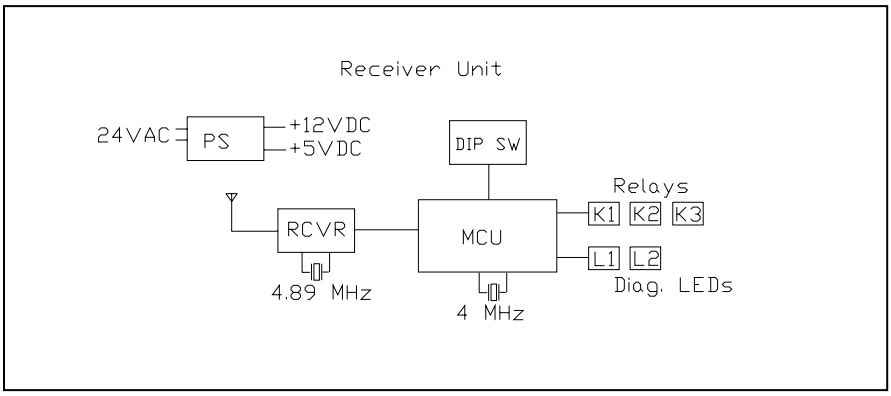

RECEIVER SCHEMATICS

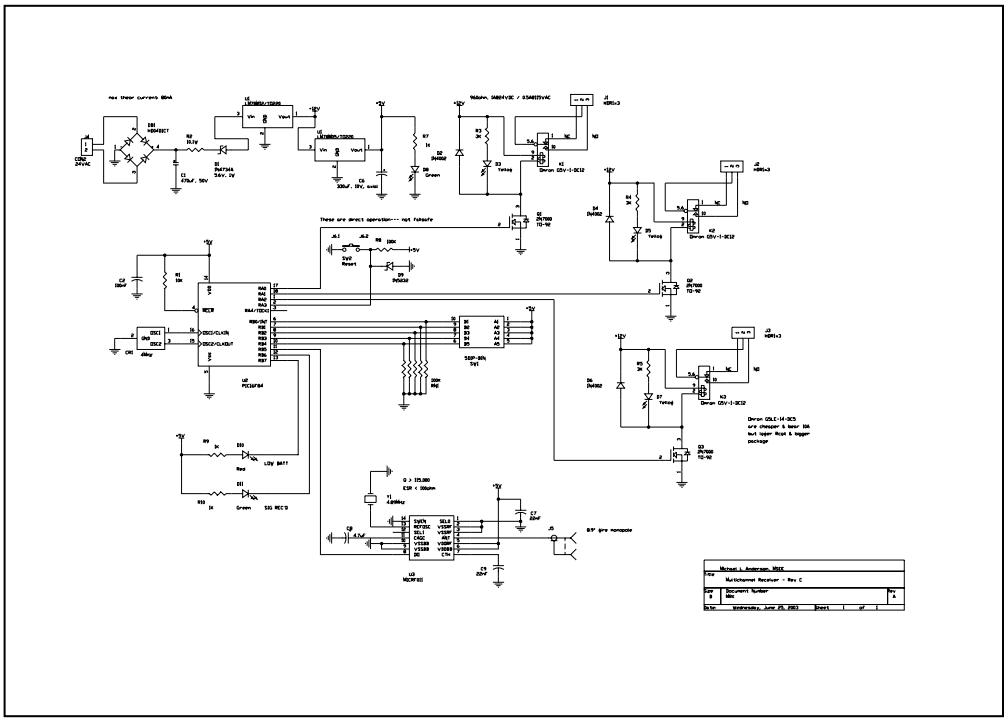

TRANSMITTER BLOCK DIAGRAM

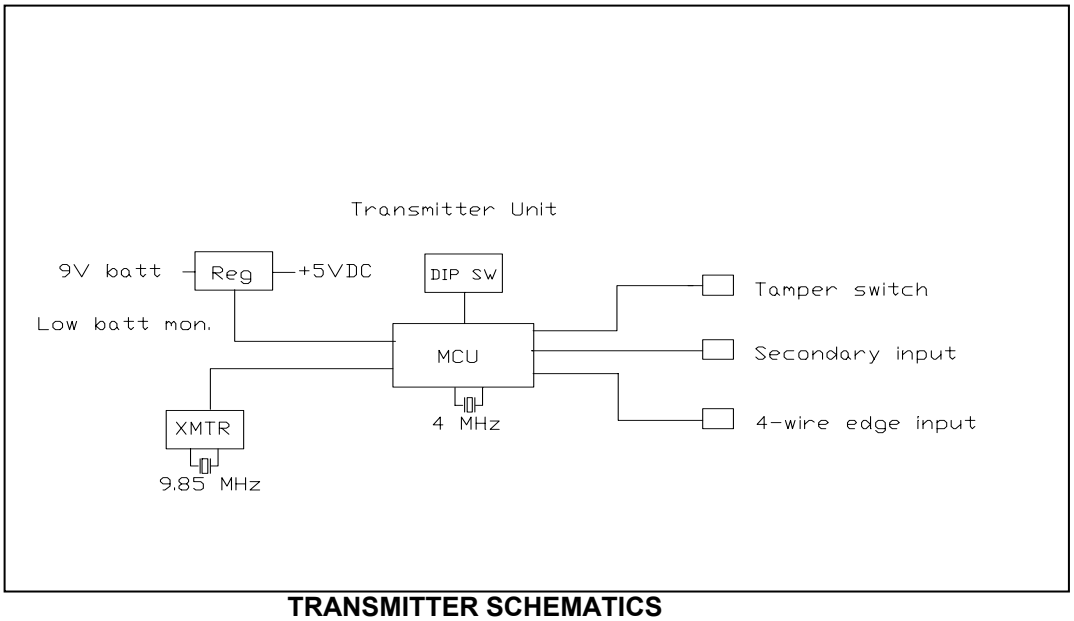

TRANSMITTER SCHEMATICS

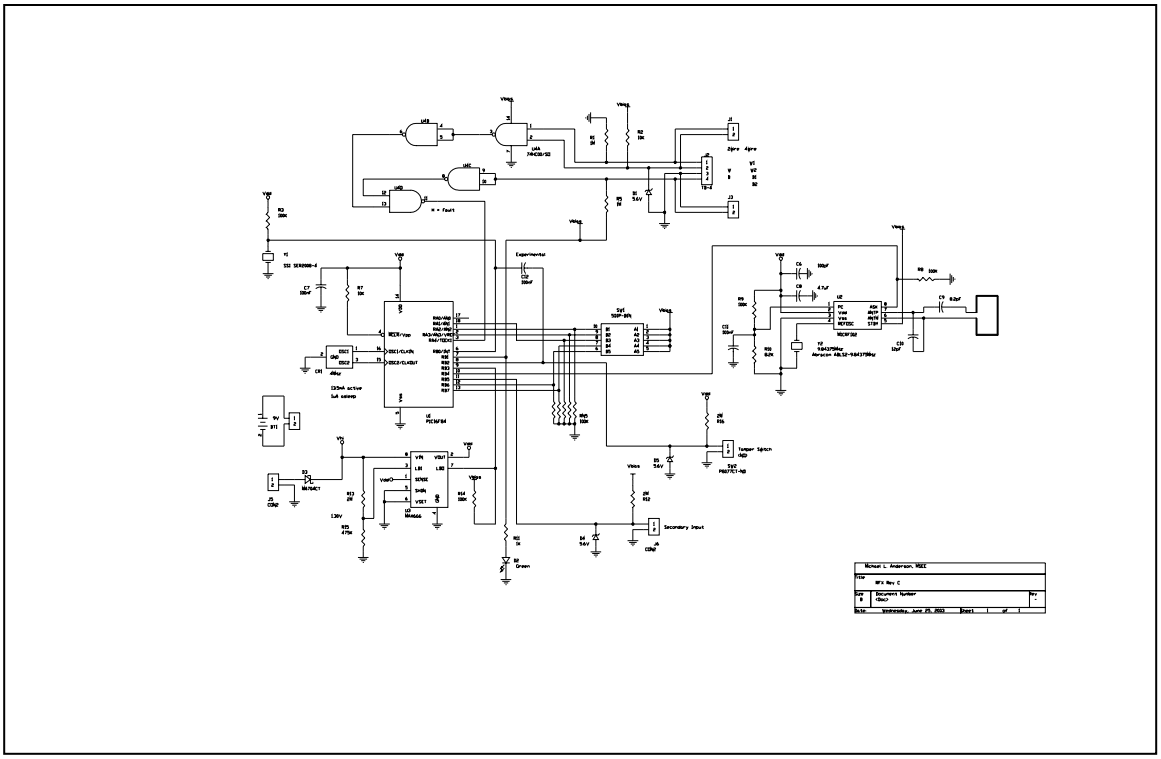

Appendix F

Operation Manual

(see attached PDF files)