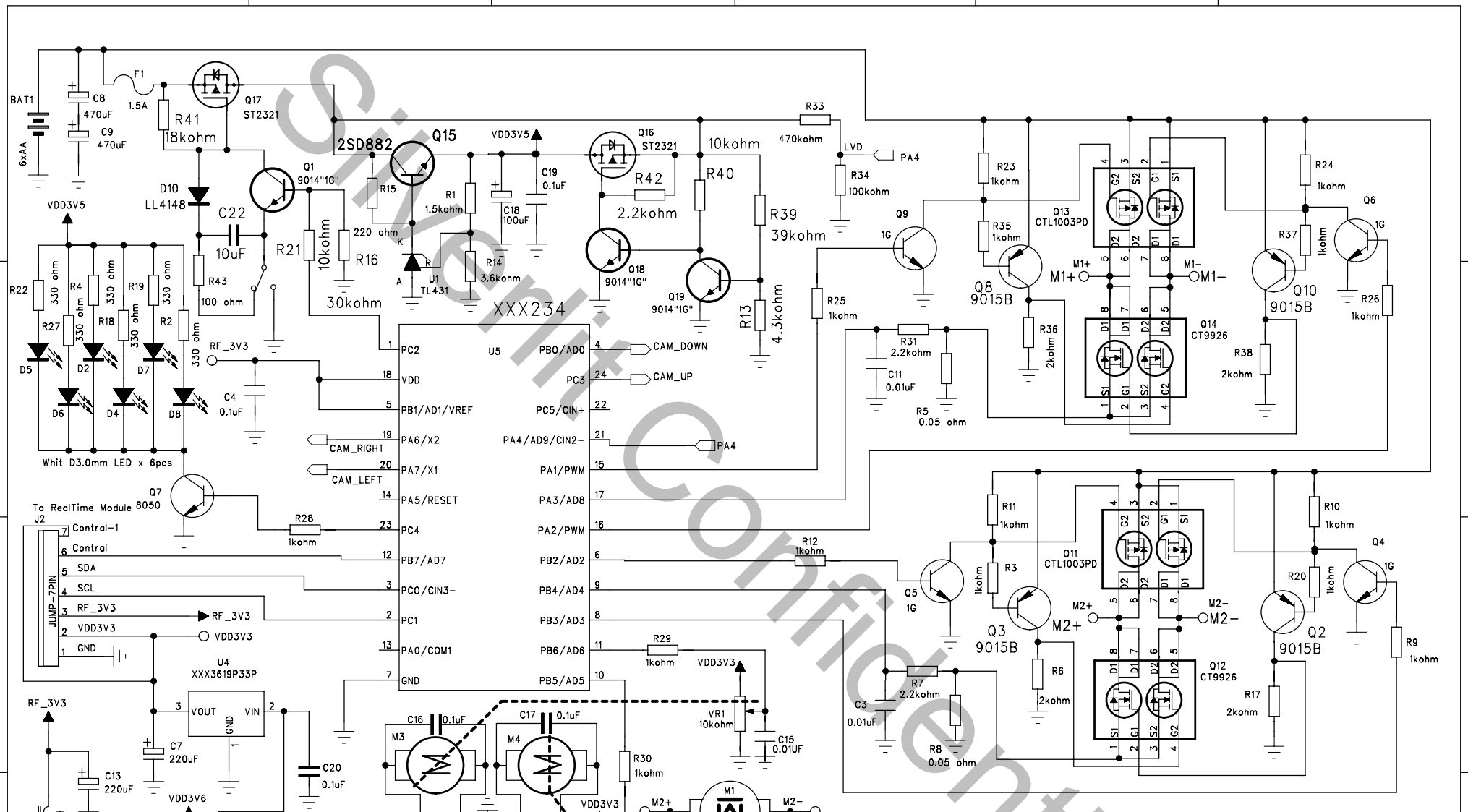

Silverlit Confidential

Silverlit®
Silverlit Toys Manufactory Ltd.
26th Floor, 38 Russell Street, Causeway Bay,Hong Kong

DWG. NAME	SCHEMATIC CIRCUIT		
ITEM NO.	82419	ITEM NAME	FPV Vehicle (RX)
		DRAWN/DATE	Albert/2016-07-26
		CHK/DATE	Nelson/2016-07-26
PAGE	1 OF 1	APP/DATE	wilson/2016-07-26

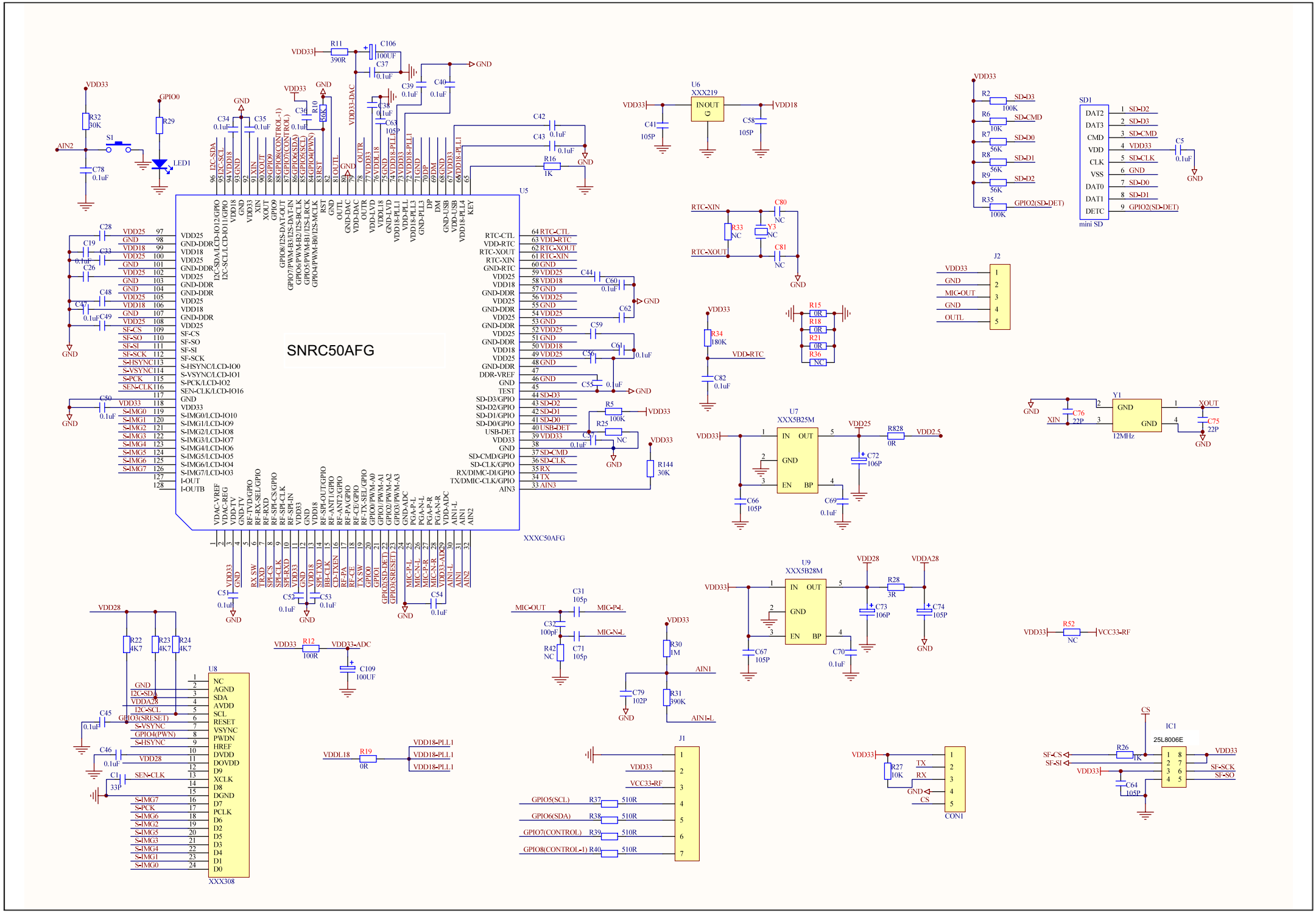
SNRC50AFG
U5
XXXC50AFG
U6
XXX219
U7
XXX5B25M
U9
XXX5B28M
U8
XXX308
J1
J2
SD1
mini SD
Y1
12MHz
IC1
25L8006E
CON1
LED1
S1
AIN2
GPIO0
VDD33
GND
VDD18
VDD25
VDD28
VDDA28
VDD2.5
VDD33-ADC
VDD18-PLL1
VDD-RTC
VCC33-RF
MIC-OUT
MIC-P-L
MIC-N-L
AIN1
AIN1-L
RTC-XIN
RTC-XOUT
XIN
XOUT
CS
SF-CS
SF-SI
SF-SCK
SF-SO
SD-D3
SD-CMD
SD-D0
SD-D1
SD-D2
SD-CLK
GPIO2(SD-DET)
GPIO5(SCL)
GPIO6(SDA)
GPIO7(CONTROL)
GPIO8(CONTROL-1)
TX
RX
VDDL18

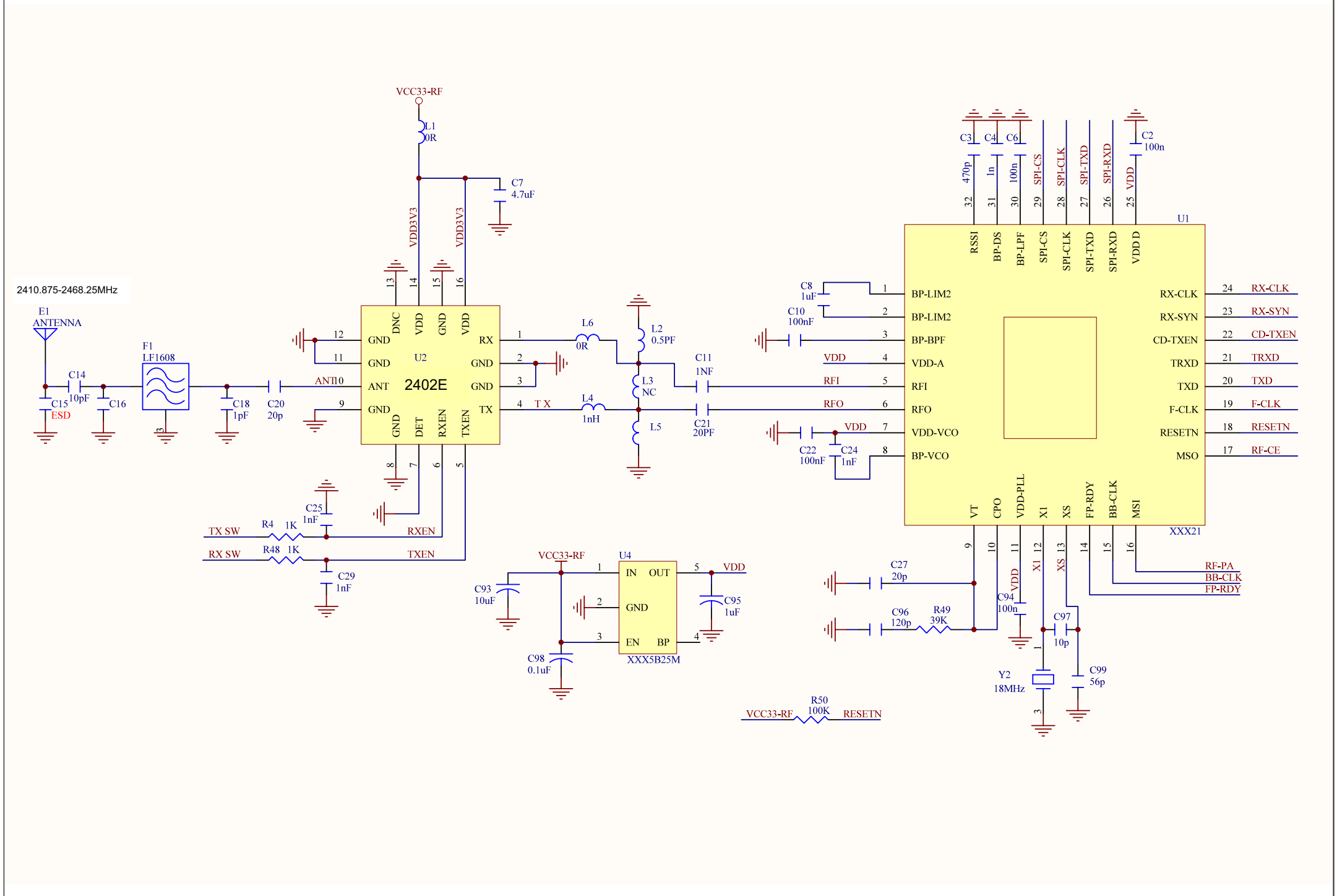
2410.875-2468.25MHz
E1
ANTENNA
C14
10pF
C15
ESD
C16
F1
LF1608
C18
1pF
C20
20p
VCC33-RF
L1
0R
C7
4.7uF
VDD3V3
VDD3V3
U2
2402E
DNC
VDD
GND
VDD
GND
GND
ANT
GND
GND
DET
RXEN
TXEN
RX
GND
GND
TX
ANT
T X
L6
0R
L4
1nH
L2
0.5PF
L3
NC
L5
C11
1NF
C21
20PF
C25
1nF
TX SW
R4
1K
RXEN
RX SW
R48
1K
TXEN
C29
1nF
VCC33-RF
U4
IN
OUT
GND
EN
BP
XXX5B25M
C93
10uF
C98
0.1uF
C95
1uF
VDD
C3
470p
C4
1n
C6
100n
C2
100n
SPI-CS
SPI-CLK
SPI-TXD
SPI-RXD
VDD
U1
RSSI
BP-DS
BP-LPF
SPI-CS
SPI-CLK
SPI-TXD
SPI-RXD
VDD D
C8
1uF
C10
100nF
BP-LIM2
BP-LIM2
BP-BPF
VDD-A
RFI
RFO
VDD-VCO
BP-VCO
VDD
RFI
RFO
VDD
C22
100nF
C24
1nF
RX-CLK
RX-SYN
CD-TXEN
TRXD
TXD
F-CLK
RESETN
MSO
RX-CLK
RX-SYN
CD-TXEN
TRXD
TXD
F-CLK
RESETN
RF-CE
VT
CPO
VDD-PLL
X1
XS
FP-RDY
BB-CLK
MSI
XXX21
RF-PA
BB-CLK
FP-RDY
C27
20p
C96
120p
R49
39K
C94
100n
VDD
C97
10p
Y2
18MHz
C99
56p
VCC33-RF
R50
100K
RESETN