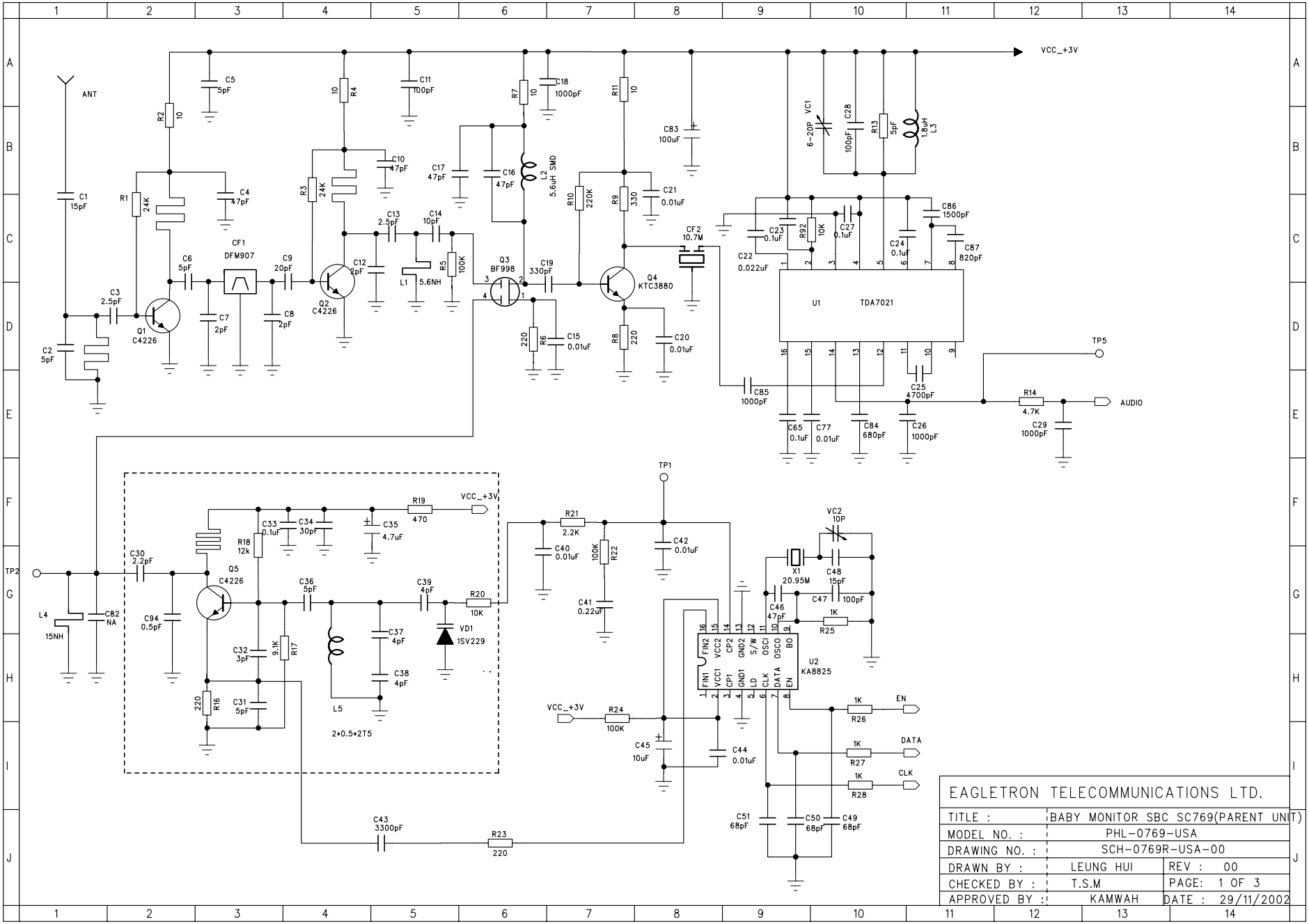

EAGLETRON TELECOMMUNICATIONS LTD.		
TITLE :	BABY MONITOR SBC SC769(PARENT UNIT)	
MODEL NO. :	PHL-0769-USA	
DRAWING NO. :	SCH-0769R-USA-00	
DRAWN BY :	LEUNG HUI	REV : 00
CHECKED BY :	T.S.M	PAGE: 1 OF 3
APPROVED BY :	KAMWAH	DATE : 29/11/2002

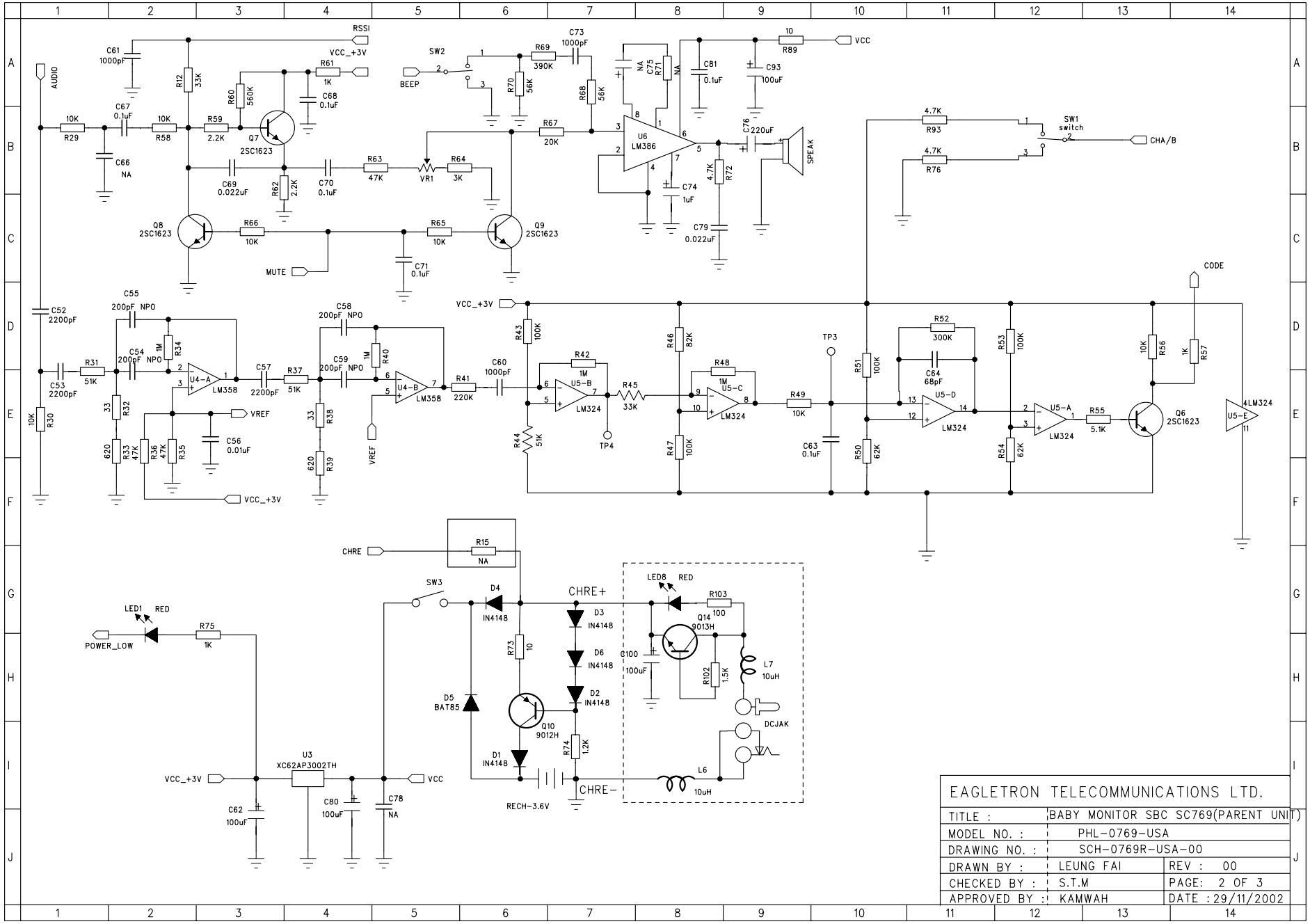

EAGLETRON TELECOMMUNICATIONS LTD.		
TITLE :	BABY MONITOR SBC SC769(PARENT UNIT)	
MODEL NO. :	PHL-0769-USA	
DRAWING NO. :	SCH-0769R-USA-00	
DRAWN BY :	LEUNG FAI	REV : 00
CHECKED BY :	S.T.M	PAGE: 2 OF 3
APPROVED BY :	KAMWAH	DATE : 29/11/2002

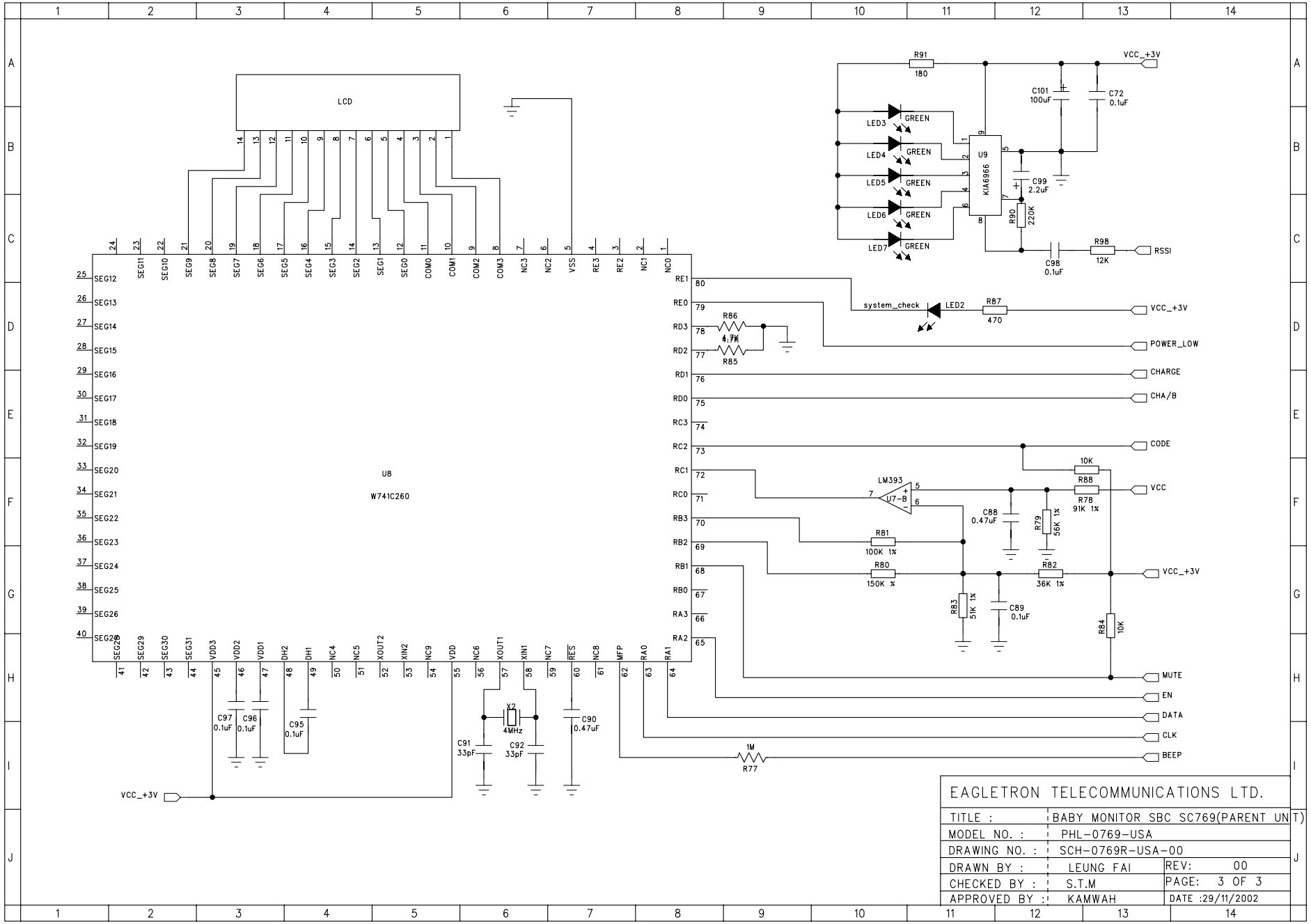

EAGLETRON TELECOMMUNICATIONS LTD.		
TITLE :	BABY MONITOR SBC SC769(PARENT UNIT)	
MODEL NO. :	PHL-0769-USA	
DRAWING NO. :	SCH-0769R-USA-00	
DRAWN BY :	LEUNG FAI	REV: 00
CHECKED BY :	S.T.M	PAGE: 3 OF 3
APPROVED BY :	KAMWAH	DATE :29/11/2002