SENSORS & LIGHTING CONTROL

HYTRONIK®

HYTRONIK ELECTRONICS CO.,LTD
Block A6, Nan'pu Science & Technology Park, Hao'si,
Shajing Street, Bao'an District, Shenzhen, P.R.C. 518104
T: 86 755 27322200 F: 86 755 27308687
E: info@hytronik.com W: www.hytronik.com

Instruction Manual for RF communication Microwave Motion Sensor
Model No.: HC428V/RF

Technical Specifications

Product type: RF microwave motion sensor
Operating voltage: 120~277VAC 60Hz
Rated load: 400W (capacitive load)
HF detection range: Max. 12m in diameter, adjustable
Time setting: 5s ~ 30min.
Stand-by period: 0s, 10s ~ 1h, +∞
Stand-by dimming level: 10% ~ 50%
Daylight threshold: 2~50 lux, disable
Installation height: Max. 6m
Working temperature: -20℃ ~ +60℃
HF system: 5.8GHz CW radar
Coding system: Fixed address coding with 16 channels
RF frequency : FSK 915MHz
RF. Transmission distance: 30 meters indoor, 100 meters in open area

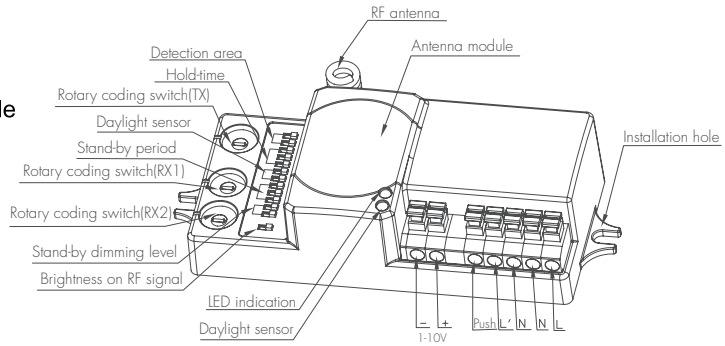

This is a combination of motion sensor and RF radio wave wireless transmission. The motion detected by 1 sensor (the master unit) can pass onto other pre-defined individuals (the slave units) though RF transmission. Thanks to fixed address code technology, it's easy to set up point-to-point or point-to-multipoint transmission.

Note: the RF signal would be affected by big metal plate, frames, thick obstacle or special frequent electromagnetic waves radiation.

Section 1 Installation & Wiring

1.1 Ensure that the electricity supply is switched off before installating or servicing this product.

1.2 Wiring diagram

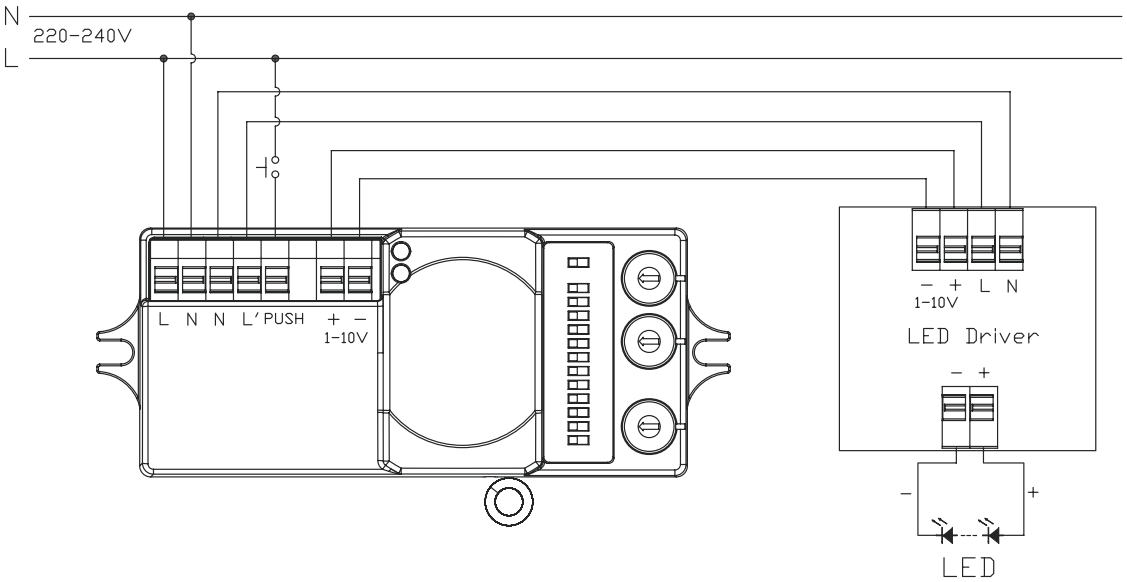

Section 2 Settings

Detection Area

This determines the effective range of the motion detector and is set by DIP switches at the sensor itself, refer to figure. Note that reducing the sensitivity will also narrow the detection range. The following settings are available:

I – 100%
II – 75%
III – 50%
IV – 10%

	1	2	
I	●	●	100%
II	●	○	75%
III	○	●	50%
IV	○	○	10%

Hold time

This determines the time the fitting remains at 100% level on motion detection and is set with DIP switches at the sensor itself, refer to figure. The walk test setting is useful when installing the fitting to establish correct operation and range. The following settings are available:

I – 5S
II – 30S
III – 1min
IV – 5min
V – 10min
VI – 20min
VII – 30min

	1	2	3	
I	●	●	●	5s
II	●	●	○	30s
III	●	○	●	1min
IV	●	○	○	5min
V	○	●	●	10min
VI	○	●	○	20min
VII	○	○	○	30min

Stand-by period (corridor function)

This is the time period you would like to keep at the low light output level before it is completely switched off in the long absence of people.

I – 0s
II – 10s
III – 1min
IV – 5min
V – 10min
VI – 30min
VII – 1h
VIII – +∞

	1	2	3	
I	●	●	●	0s
II	●	●	○	10s
III	●	○	●	1min
IV	●	○	○	5min
V	○	●	●	10min
VI	○	●	○	30min
VII	○	○	●	1H
VIII	○	○	○	+∞

Note: “0s” means on/off control; “+∞” means 2 steps of dimming control, fixture never switch off.

Stand-by dimming level

This is the dimmed low light output level you would like to have after the hold-time in the absence of people.

I – 10%
II – 20%
III – 30%
IV – 50%

	1	2	
I	●	●	10%
II	●	○	20%
III	○	●	30%
IV	○	○	50%

Daylight sensor

This setting holds off the 100% light output should there sufficient daylight and is set using DIP switches at the sensor, refer to figure. The following settings are available:

I – Disable
II – 50Lux
III – 10Lux
IV – 2Lux

	1	2	
I	●	●	Disable
II	●	○	50Lux
III	○	●	10Lux
IV	○	○	2Lux

Section 3 RF grouping (Max. 16 channels)

Using a screwdriver to adjust the rotary switch on both the master & slave unit, to keep them pointing at the same channel, the grouping is then automatically completed. 16 channels (Max. 16 groups) available for both the master & slave unit.

Using a screwdriver to point the arrow to the same position on the master unit and slave units.

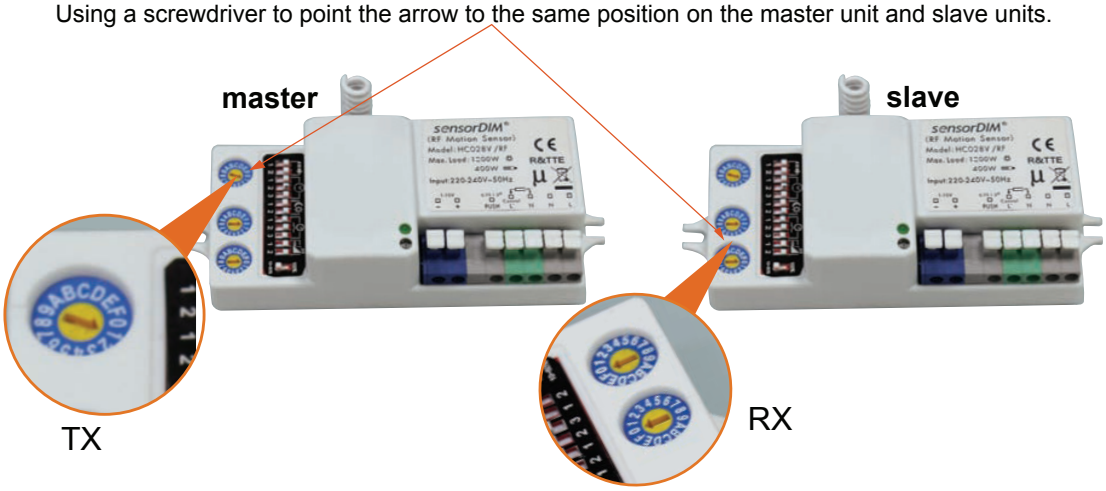

This sensor is not only a master, but also a slave. It has three rotary switches, TX is for sending RF signal, RX1 and RX2 are for receiving RF signal from two different groups of masters. Here is an example as below form FYI:

Floor No.	TX	RX1	RX2
1	0	1	1
2	1	0	2
3	2	1	3
4	3	2	4
5	4	3	5
6	5	4	6
7	6	5	7
8	7	6	6

Note: the sensor installed on first floor and top floor recieve one RF signal only, RX1/RX2 point to the same channel.

Section 4 Functions

4.1 8H manual on mode for LED lamp

With simple operation, rapidly turn off/on the fixture 3 cycles within 3 sec. (the green LED on the sensor flashes and the fixture blinks 3 times to indicate the success of setup), lamp will be 100% on for 8 hours, and then automatically goes to sensor mode after 8 hours. Useful when sensor function is not needed in special occasion.

This 8H manual on feature can be cancelled by turn off/on the fixture 1 cycle within 1sec.

4.2 Zero-cross relay operation

Designed in the software, the sensor switch on/off the load right on the zero-cross point, to ensure the min. current passing through the relay contact point, and enable the maxi. load and life-time of the relay.

4.3 Loop-in and loop-out

Double L N terminal makes it easy for wire loop-in and loop out, saves the cost of terminal block and assembly time.

4.4 Ambient daylight threshold

With simple operation, rapidly turn off/on the fixture 2 cycles within 2sec:

1. The green LED on the sensor flashes slowly for 5 seconds, meanwhile the fixture blinks twice.
2. The daylight sensor measures and remembers the surrounding lux for 1 sec.
3. The fixture and green LED is on for 10s to indicate the success of learning.

This feature enables the fixture to function well in any real application circumstance, where the daylight penetrated into fixture may vary a lot.

* The latest surrounding lux value overwrites previous lux value learned.
* Both the setting on DIP switch and the learned ambient lux threshold can overwrite each other.The latest action stays in validity.

4.5 Manual override

This sensor reserves the access of manual override function for end-users to switch on/off, or adjust the stand-by dimming level with the push-switch, which makes the product more user-friendly, and more options to fit for some extra-ordinary demands.

* Short push (<1s): on/off;

ON → OFF: the light turns off immediately and can not be lighten for a certain time (equals to hold time preset) even movement is detected. After this period, the sensor goes to auto sensor mode.

OFF → ON: the light turns on 100% and goes to sensor mode, even when the ambient lux excesses the daylight threshold.

* Long push (>1s): dim up/down the stand-by dimming level from 10% to 50%. Both the setting on DIP switch and manual override can overwrite each other, the latest action stays in validity.
* If customers do not want to have this manual override function, we can just leave this “push” terminal alone , not connected to any wire.

Note: 1. Motion sensor overwrites daylight sensor, meaning the daylight sensor starts to check the ambient natural light only when the lamp is switch off (motion hold-time elapsed).

2. 1-10V output on the master unit HC028V / RF is isolated, SELV output.

Section 5 Trouble Shooting

MALFUNCTION CAUSE REMEDY	CAUSE	REMEDY
The load will not work	Incorrect light-control setting selected	Adjust setting
	Load faulty	Replace load
	Mains switch OFF	Switch ON
The load is always on	Continuous movement in the detection zone	Check zone setting
The load is on without any identifiable movement	The sensor is not mounted for reliably detecting movement	Securely mount enclosure
	Movement occurred, but not identified by the sensor (movement behind wall, movement of small object in immediate lamp vicinity etc.)	1.Reduce sensitiviy. 2.Check the movement behind walls, avoid facilities such as water pipe, fan, which may mistrigger the sensor.
The load will not work despite movement	Rapid movements are being suppressed to minimize malfunctioning or the detection radius is too small	Check zone setting

FCC NOTE：

This device complies with Part 15 of the FCC Rules.

Operation is subject to the following two conditions: (1) this device may not cause harmful interference, and (2) this device must accept any interference received, including interference that may cause undesired operation.

THE MANUFACTURER IS NOT RESPONSIBLE FOR ANY RADIO OR TV INTERFERENCE CAUSED BY UNAUTHORIZED MODIFICATIONS OR CHANGE TO THIS EQUIPMENT. SUCH MODIFICATIONS OR CHANGE COULD VOID THE USER’S AUTHORITY TO OPERATE THE EQUIPMENT.