APPENDIX D

: BLOCK DIAGRAM(S)

D	C	B	A	NO.	DESCRIPTION	PART NO.	MATERIAL	Q'TY	SURFACE TREATMENT	REMARK
					BLOCK DIAGRAM	MX-350				

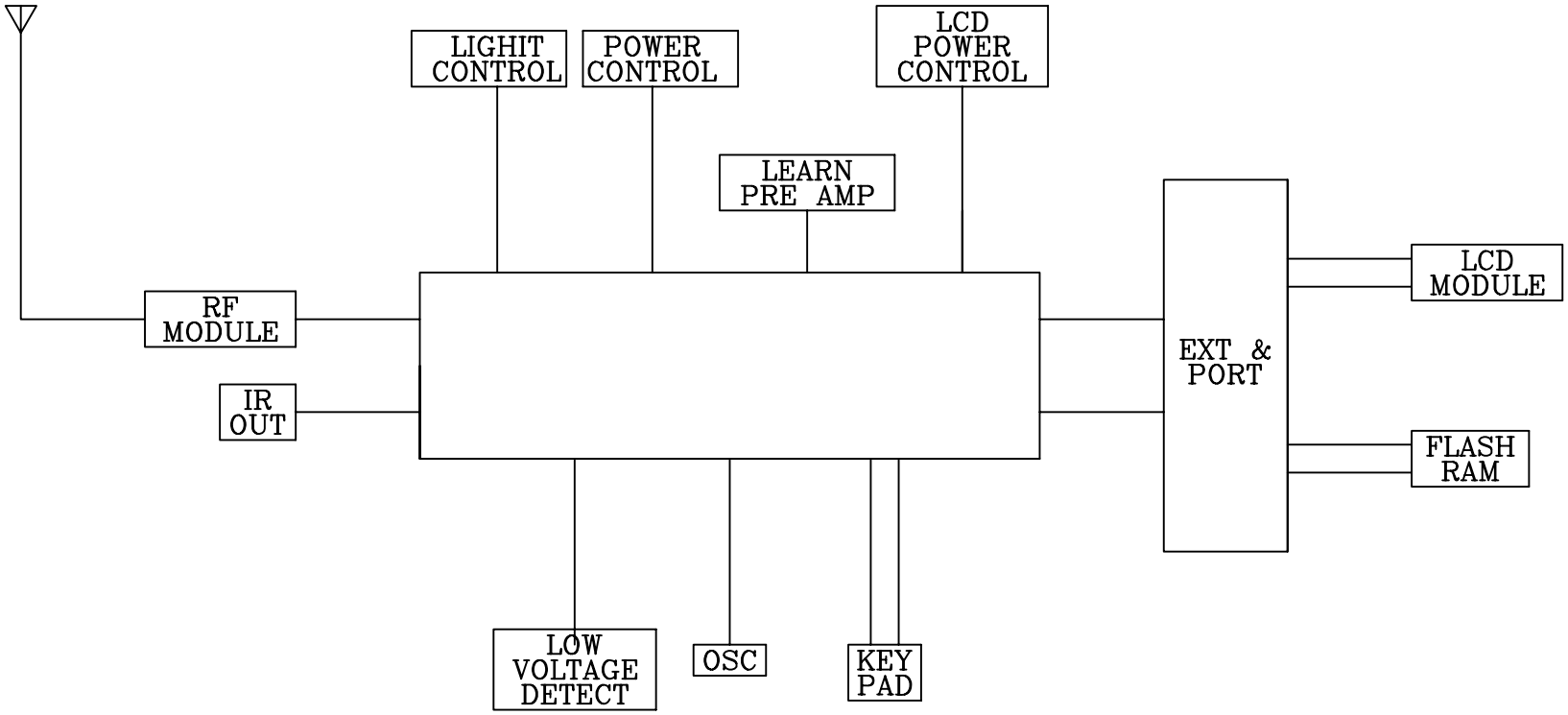

DATE	AUTHORIZED	CHANGED DETAILS	CHANGED BASIS

SCALE	NS	UNIT	MM	LIMIT		DESC-RIPTION	BLOCK DIAGRAM (HW BLOCK)
Drafter		Checked		Approved			
						P/NO.	ϕTMF-A307 TYPE
OH SUNG ELECTRONICS CO.,LTD.			REF. NO.			DRAFT NO.	MX-350
			STOCK NO.				

A3(420X297)

D	C	B	A	NO.	DESCRIPTION	PART NO.	MATERIAL	Q'TY	SURFACE TREATMENT	REMARK
					BLOCK DIAGRAM	MX-350				

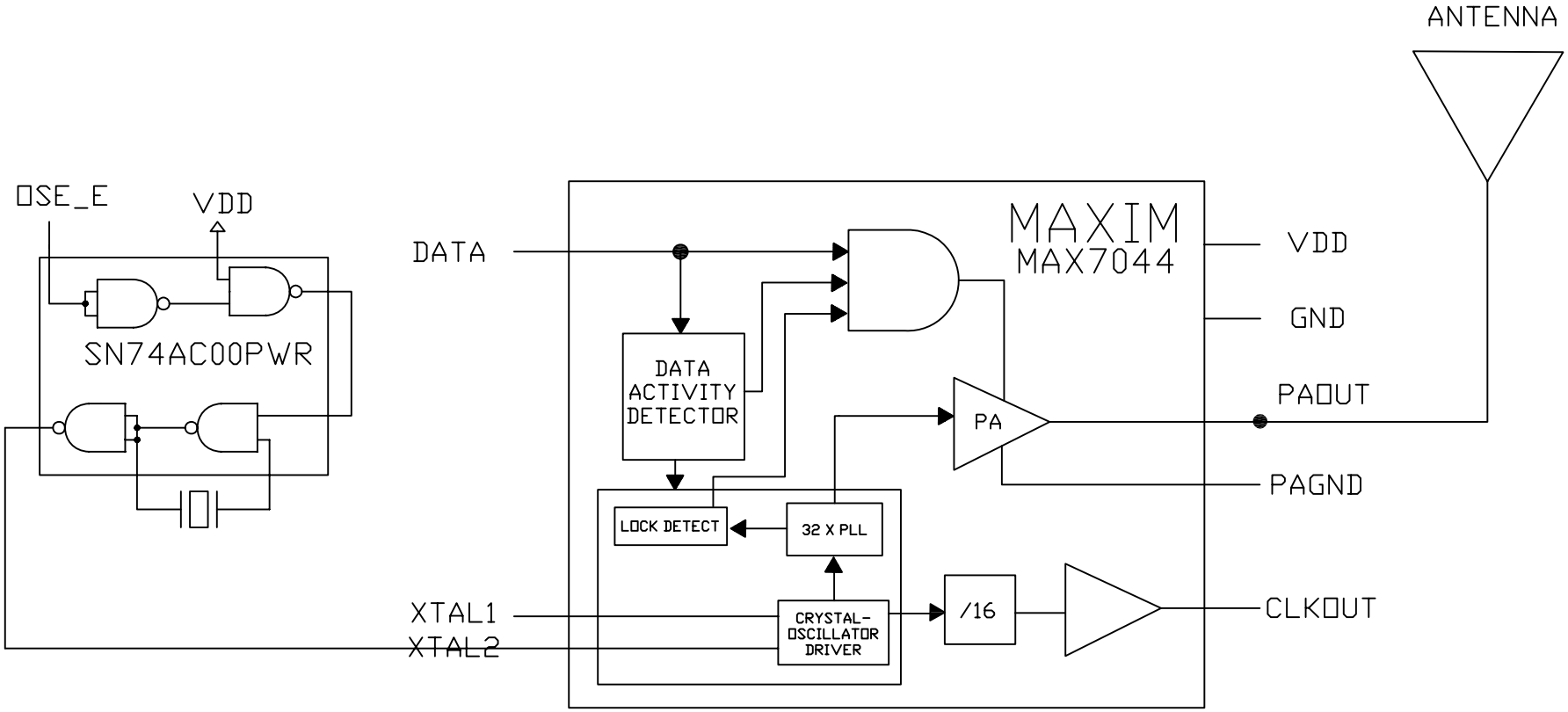

DATE	AUTHORIZED	CHANGED DETAILS	CHANGED BASIS

SCALE	NS	UNIT	MM	LIMIT		DESC-RIPTION	BLOCK DIAGRAM (RF MODULE)
Drafter		Checked		Approved			
						P/NO.	ØTMF-A307 TYPE
OH SUNG ELECTRONICS CO., LTD.		REF. NO.				DRAFT NO.	MX-350
		STOCK NO.					

A3(420X297)