Appendix A Schematics/Block Diagram
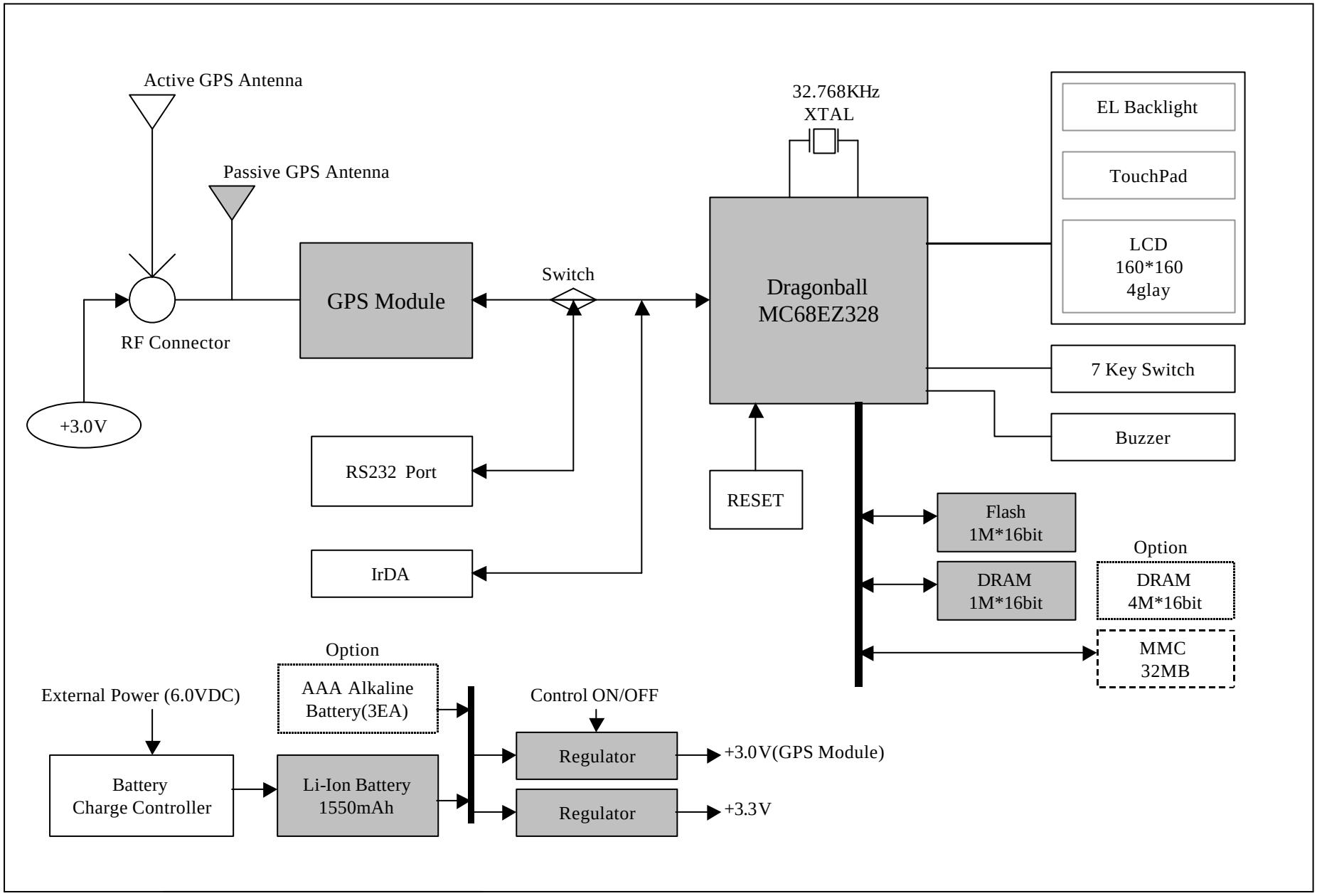
CVGPS-1820 Block Diagram