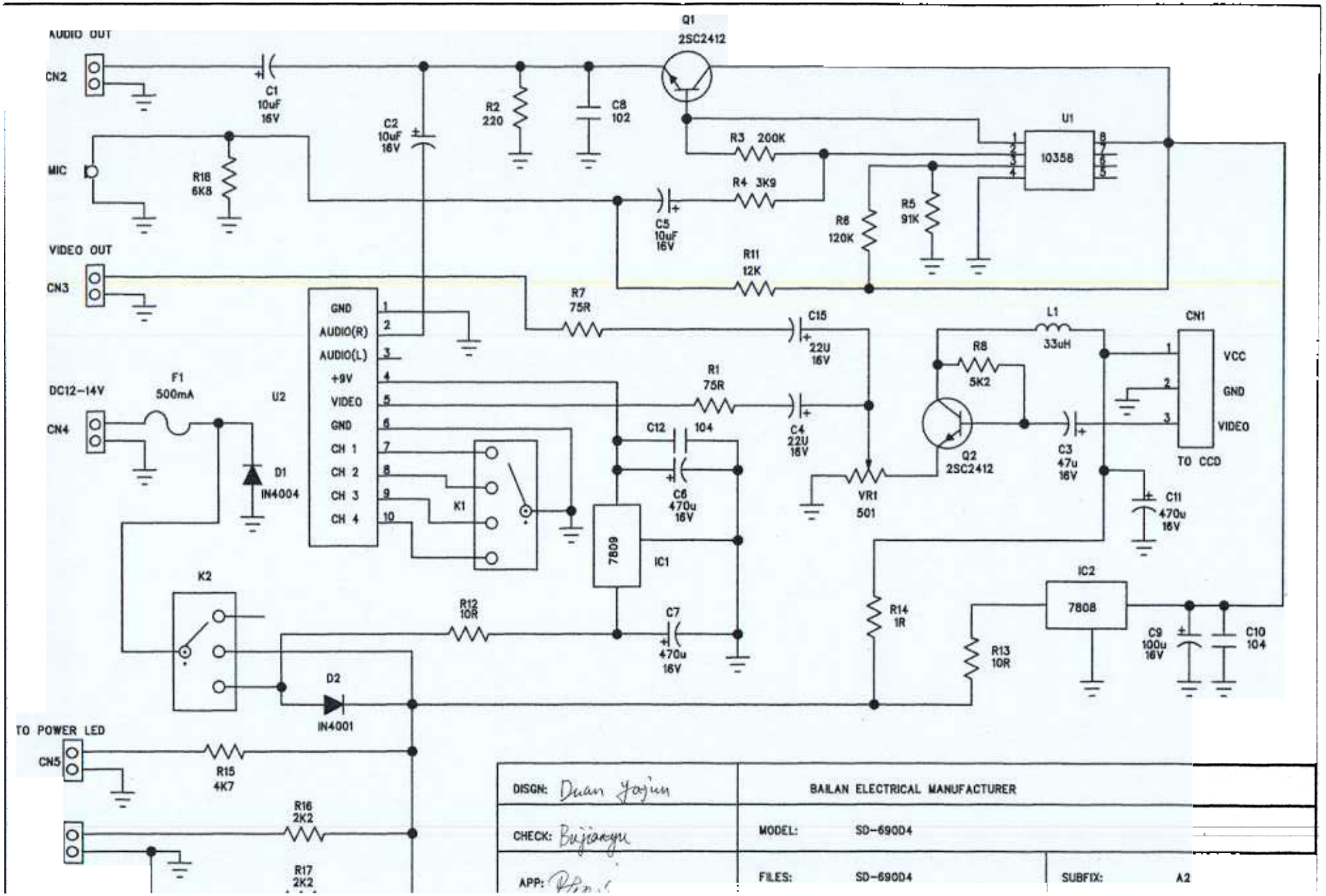
AUDIO OUT
CN2
C1
10uF
16V
C2
10uF
16V
R2
220
C8
102
Q1
2SC2412
R3 200K
U1
10358
MIC
R18
6K8
R4 3K9
C5
10uF
16V
R6
120K
R5
91K
R11
12K
VIDEO OUT
CN3
GND
AUDIO(R)
AUDIO(L)
+9V
VIDEO
GND
CH 1
CH 2
CH 3
CH 4
R7
75R
C15
22U
16V
L1
33uH
CN1
VCC
GND
VIDEO
TO CCD
R8
5K2
R1
75R
C4
22U
16V
DC12-14V
CN4
F1
500mA
U2
D1
IN4004
C12
104
C6
470u
16V
K1
7809
IC1
Q2
2SC2412
C3
47u
16V
VR1
501
C11
470u
16V
K2
R12
10R
C7
470u
16V
R14
1R
IC2
7808
C9
100u
16V
C10
104
R13
10R
D2
IN4001
TO POWER LED
CN5
R15
4K7
R16
2K2
R17
2K2
DISGN:
CHECK:
APP:
BAILAN ELECTRICAL MANUFACTURER
MODEL: SD-690D4
FILES: SD-690D4
SUBFIX: A2

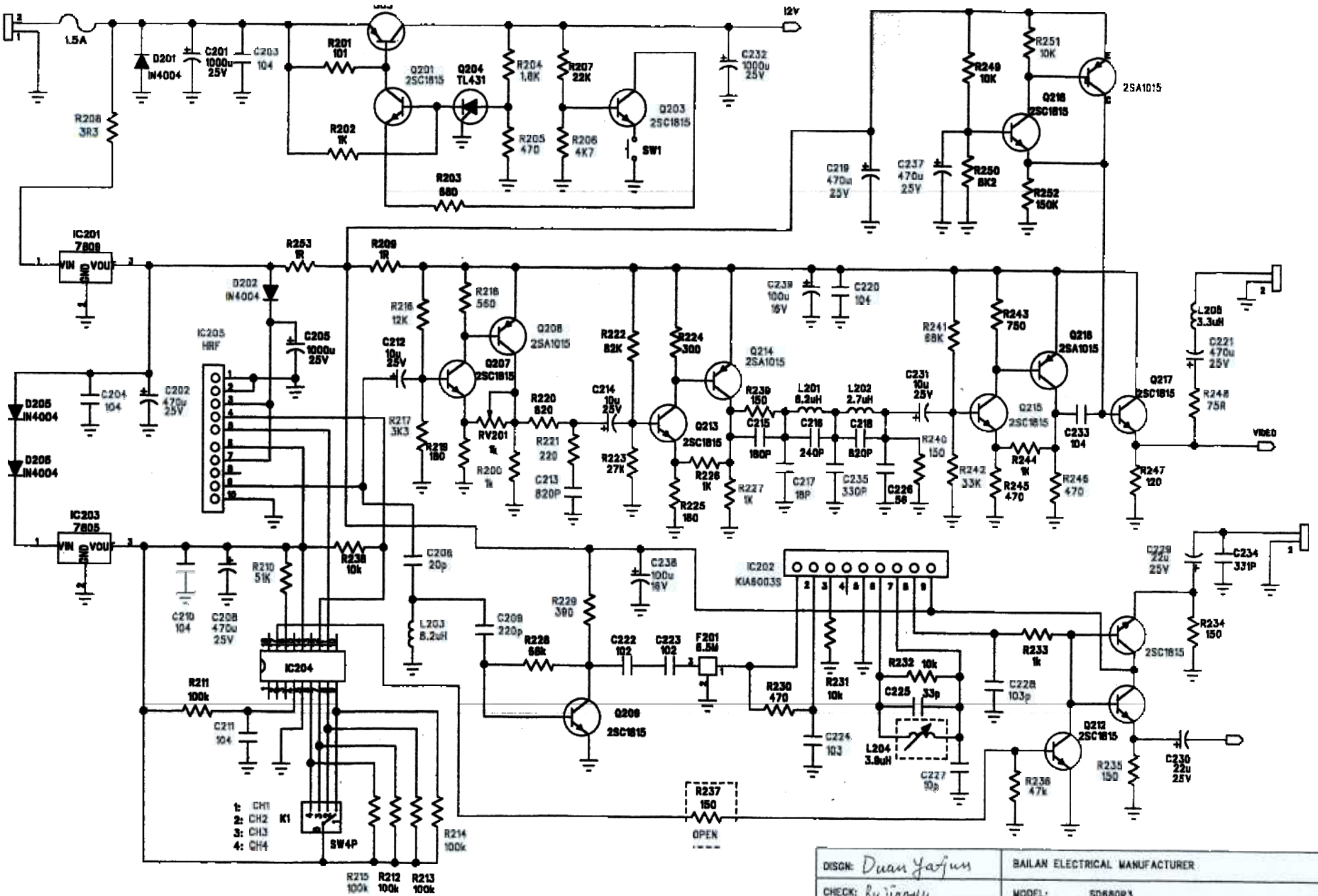
1.5A
D201 IN4004
C201 1000u 25V
C203 104
R201 101
R202 1K
Q201 2SC1815
Q204 TL431
R204 1.8K
R205 470
R207 22K
R206 4K7
Q203 2SC1815
SW1
R203 680
R208 3R3
C232 1000u 25V
12V
R249 10K
R251 10K
Q216 2SC1815
2SA1015
C219 470u 25V
C237 470u 25V
R250 8K2
R252 150K
IC201 7809
VIN VOUT GND
R253 1R
R209 1R
D202 IN4004
C205 1000u 25V
IC205 HRF
D205 IN4004
D206 IN4004
C204 104
C202 470u 25V
R216 12K
R218 560
Q208 2SA1015
Q207 2SC1815
C212 10u 25V
R217 3K3
R219 180
RV201 1k
R200 1k
R220 820
R221 220
C213 820P
R222 82K
R224 300
C214 10u 25V
R223 27K
Q213 2SC1815
R226 1K
R225 180
R227 1K
Q214 2SA1015
C239 100u 16V
C220 104
R239 150
C215 180P
L201 8.2uH
C216 240P
L202 2.7uH
C218 820P
C231 10u 25V
R240 150
C217 18P
C235 330P
C226 56
R241 68K
R242 33K
R243 750
Q218 2SA1015
Q215 2SC1815
R244 1K
R245 470
R246 470
C233 104
Q217 2SC1815
L208 3.3uH
C221 470u 25V
R248 75R
VIDEO
R247 120
IC203 7805
VIN VOUT GND
R210 51K
R238 10k
C210 104
C208 470u 25V
C206 20p
L203 8.2uH
C209 220p
R228 68k
R229 390
C238 100u 16V
C222 102
C223 102
F201 6.5M
IC202 KIA6003S
R230 470
R231 10k
R232 10k
C225 33p
L204 3.9uH
C227 10p
C224 103
C228 103p
R233 1k
C229 22u 25V
C234 331P
R234 150
2SC1815
Q209 2SC1815
Q212 2SC1815
R235 150
C230 22u 25V
R236 47k
IC204
R211 100k
C211 104
1: CH1
2: CH2
3: CH3
4: CH4
K1
SW4P
R214 100k
R215 100k
R212 100k
R213 100k
R237 150
OPEN
DISGN: Duan Yafun
CHECK: Bu Jianyu
APPROVED:
DATE: 2001/08/11
BAILAN ELECTRICAL MANUFACTURER
MODEL: SD680R3
FILES: SD680R3
SUBX: A2
DRAWN
PAGE

Sa Aug

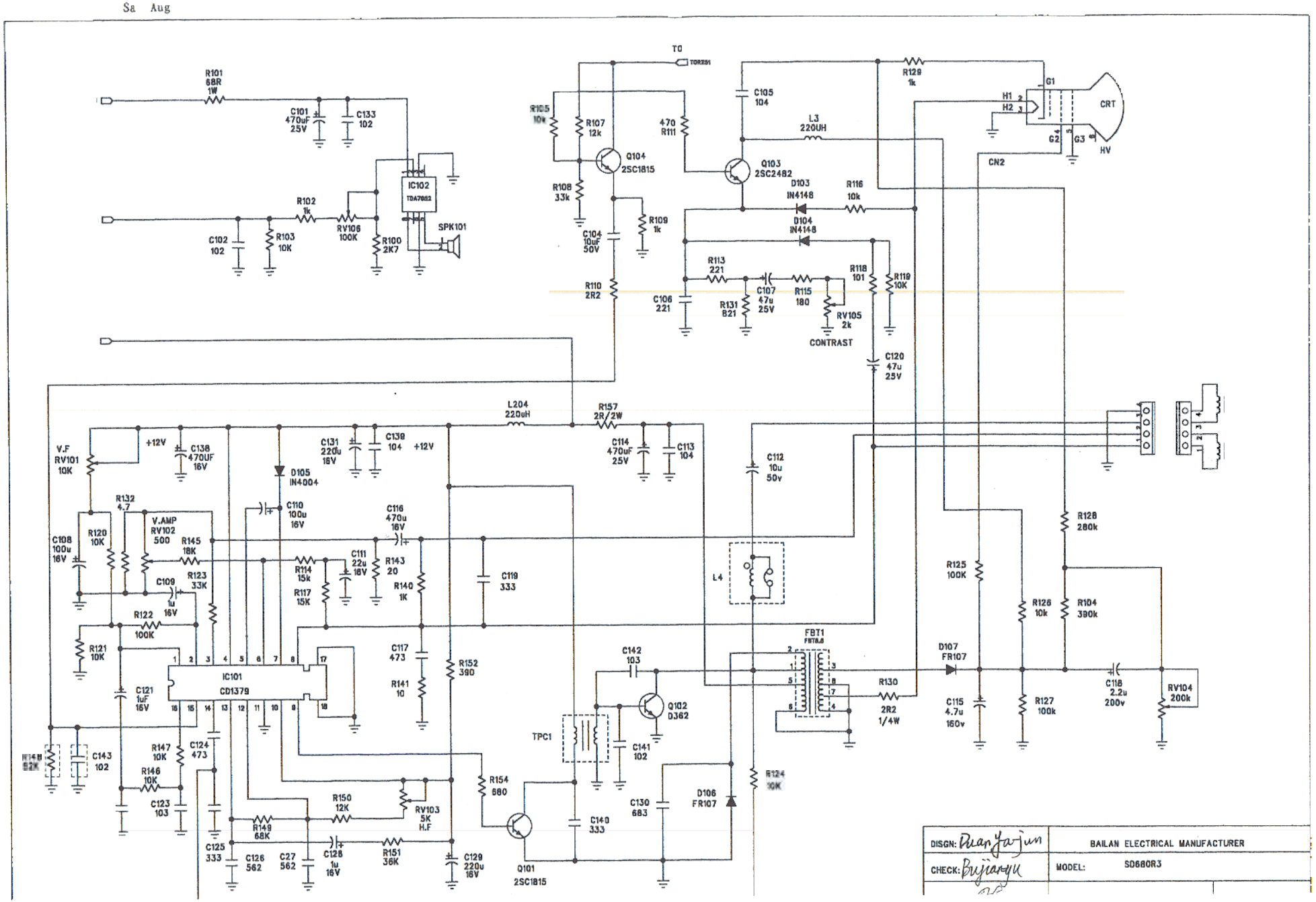
R101 68R 1W
C101 470uF 25V
C133 102
IC102 TDA7052
R102 1k
RV106 100K
R100 2K7
C102 102
R103 10K
SPK101
TO
R105 10k
R107 12k
Q104 2SC1815
R108 33k
C104 10uF 50V
R109 1k
R110 2R2
470 R111
Q103 2SC2482
C105 104
L3 220UH
R129 1k
D103 IN4148
D104 IN4148
R116 10k
R113 221
C107 47u 25V
R115 180
RV105 2k
CONTRAST
R118 101
R119 10K
C106 221
R131 821
C120 47u 25V
CRT
G1
G2
G3
HV
H1
H2
CN2
L204 220uH
R157 2R/2W
C114 470uF 25V
C113 104
C112 10u 50v
V.F RV101 10K
+12V
C138 470UF 16V
C131 220u 16V
C139 104
D105 IN4004
C110 100u 16V
C116 470u 16V
R132 4.7
V.AMP RV102 500
R145 18K
C108 100u 16V
R120 10K
R114 15k
C111 22u 16V
R143 20
R140 1K
C119 333
R123 33K
C109 1u 16V
R117 15K
R122 100K
R121 10K
IC101 CD1379
C117 473
R141 10
R152 390
L4
R128 280k
R125 100K
R126 10k
R104 390k
FBT1
D107 FR107
C142 103
Q102 D362
R130 2R2 1/4W
C115 4.7u 160v
R127 100k
C118 2.2u 200v
RV104 200k
C121 1uF 16V
TPC1
C141 102
R148 82K
C143 102
R147 10K
C124 473
R146 10K
C123 103
R154 680
R124 10K
D106 FR107
C130 683
R150 12K
RV103 5K H.F
R149 68K
C140 333
C125 333
C126 562
C27 562
C128 1u 16V
R151 36K
C129 220u 16V
Q101 2SC1815
DISGN: Duan Yajun
CHECK: Bujianyu
BAILAN ELECTRICAL MANUFACTURER
MODEL: SD680R3