视得安®
SHIDEAN

SD-680R3/SD-690D4

2.4GHZ Wireless Observation System

Manual Instruction

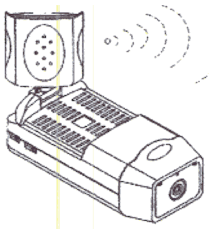

Shenzhen SHIDEAN Technology Industries Co.,Ltd.

VER:A2.0

1. Wireless CCD camera(SD-690D4) ---------- 1

2. Wireless monitor(SD-680R3) ---------- 2

3. Installation of SD-690D4 ---------- 3

4、 Power supply for SD-680R3 ---------- 4

5、 The adjustment of antenna ---------- 5

6、 Wireless observation system

SD-680R3+SD-690D4 ---------- 6

7、 Operation ---------- 7

8、 Specification ---------- 8

9、 How to clear the usual stoppage ---------- 9

10、 Notes ---------- 10

Wireless CCD Camera (SD-690D4)

Front View

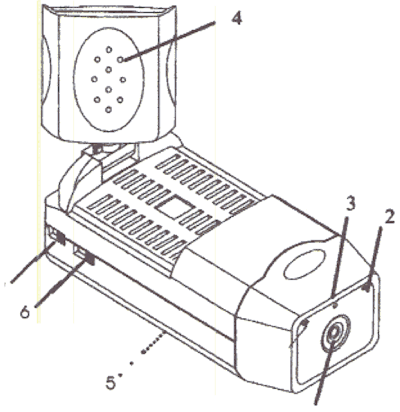

Back View

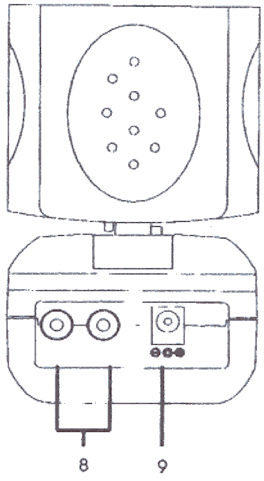

1. 1/3" CCD camera, angle: 78
2. Microphone(single-way audio transmission)
3. Operation indicate light(in working when ON)
4. 2.4G A/V launch antenna board(Hi-gain antenna transfer the A/V signal to the monitor)
5. Standard bracket hole(at bottom))
6. Channel selecting switch(channel 1 to channel 4 are available)
7. Power ON/OFF(OFF:turn off;ON1:only CCD camera is working;ON2:camera and monitor are working)
8. Audio/video output terminals
9. Power input socket(DC12V-14V, 500mA, supply by adaptor

Wireless Monitor (SD-680R3)

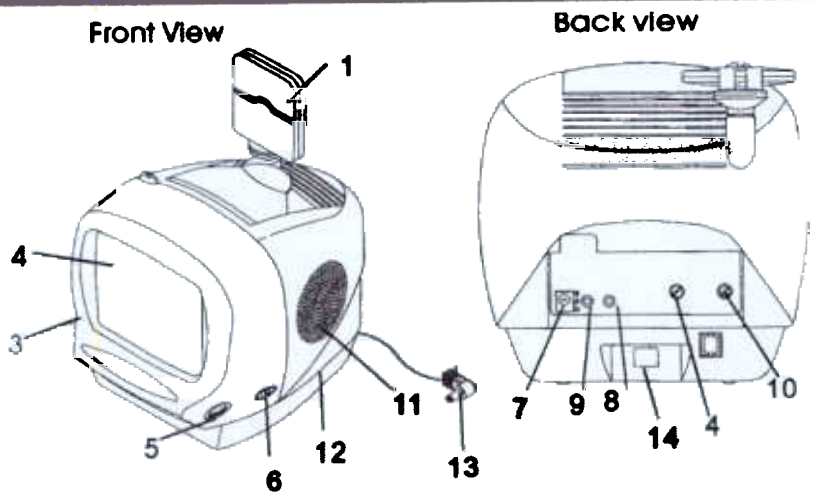

1. 2. 4G receiving antenna board
2. 5. 5″ CRT
3. Brightness adjustment button
4. H frequency adjustment button
5. Switch/volume adjustment button
6. Channel select button(channel 1 to 4 are available)
7. DC power socket(supply by 1. 2A DC12-14V adaptor)
8. Video output(to video input of the recorder)
9. Audio output(to Audio input of the recorder)
10. Contrast adjustment
11. Broadcast
12. Battery box(with 10 pieces of 1. 5V Dry battery)
13. Power plug when using battery
14. Fixed screw battery box

Installation of wireless CCD camera(SD-690D4)

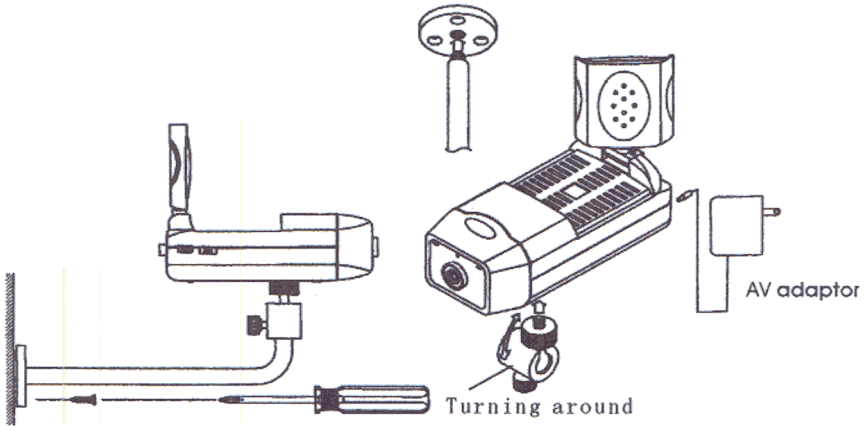

1. Using three screws to fix the bracket on the wall or ceiling
2. Screwing tight the camera onto the bracket
3. To adjust the monitor scope before it is installed
4. Power supply by DC12V, 500mA adaptor (AC220V or AC120V)

Power supply to wireless monitor(SD-680R3)

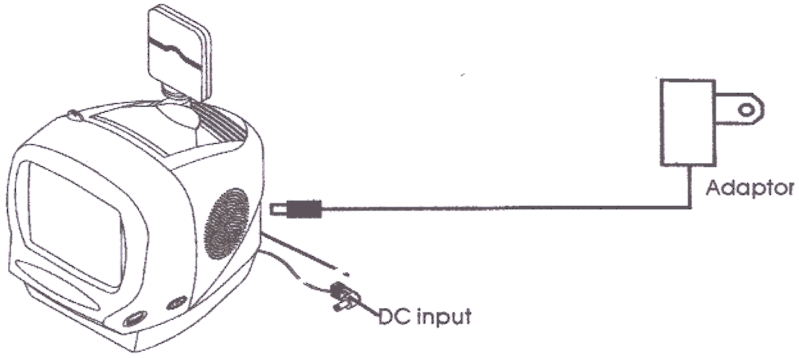

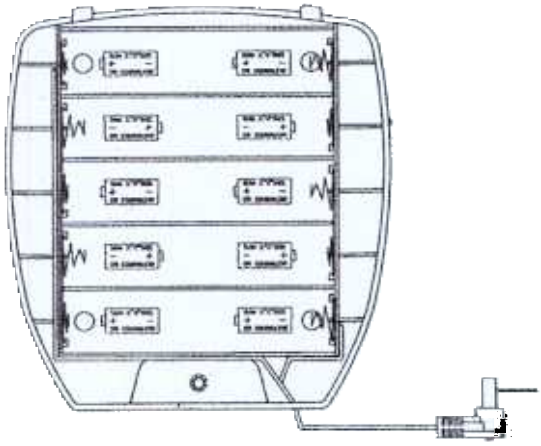

Power supply has two ways are alternative:

1. AC adaptor(AC 220V or AC120V): output DC12-14V, connect the plug to DC power socket at the back bottom of the antenna

2. 10 pieces of 1.5V dry battery: connect the plug to the power socket at the back bottom of the monitor

How to adjust the antenna

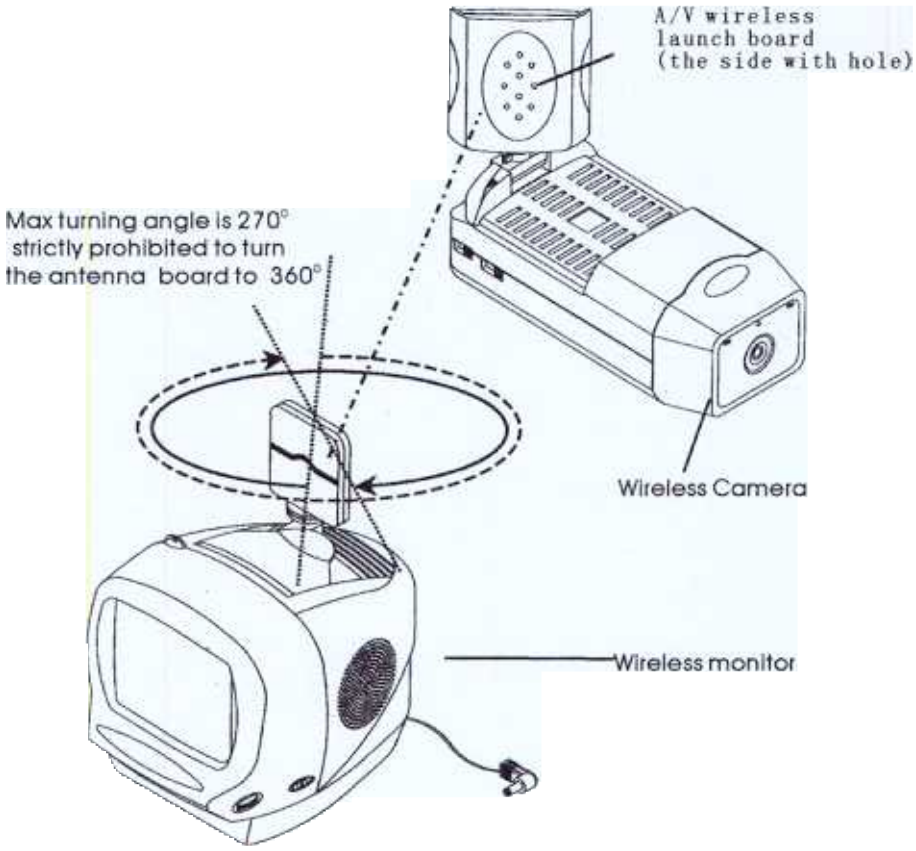

Note: The launch frequency should keep the same as the monitor

Wireless observation system(SD-680R3+SD690D4)

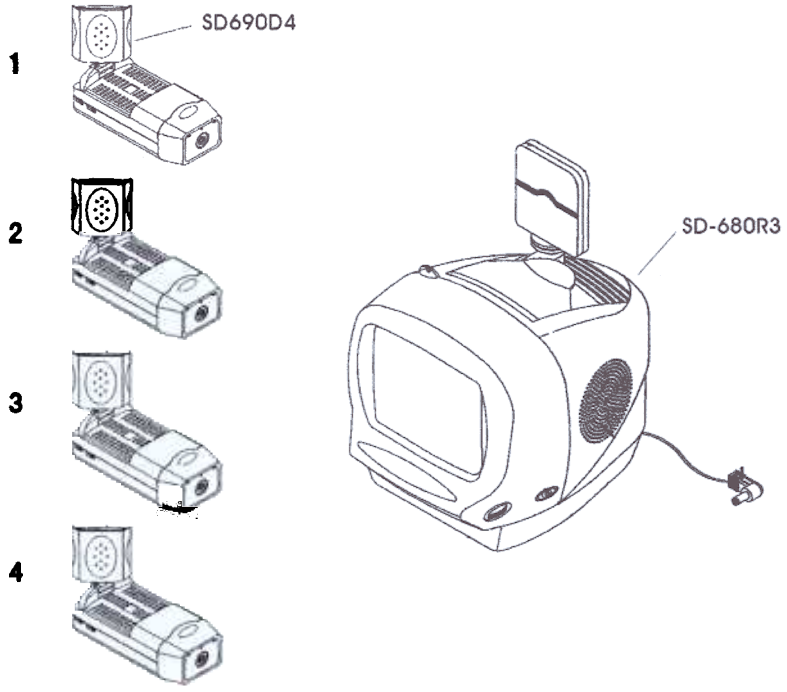

1. One monitor can be connected to 4 cameras
2. The channel of cameras should be different
3. Selecting different channel to monitor image from cameras
4. The distance between monitor and cameras should be within 100m(open space)
5. The image from one camera can be received by innumerable monitors within effective distance

operate

How to operate SD-690D4

1.1 Fix the bracket of camera then screw tight the camera

1.2 Adjust the right angle and select launching channel

1.3 Open the antenna board and adjust the angle lightly

1.4 Please check up if the general power can be fit for our adaptor, and then input our adaptor to the general power socket, finally Input the DC plug to the power socket of the camera

1.5 Select wire mode: set the power switch to On1;
Select wireless mode: set the power switch to ON2

1.6 When the camera is working efficiently in wire/wireless mode, the indicate light "ON"

How to operate SD-680R3

2.1 Put the monitor to ideal place

2.2 Open the antenna board then select power supply way. When supplied by battery: input the plug to the DC socket of wireless monitor; when supplied by adaptor: input the DC output plug to wireless DC socket

2.3 Keep the same channel with the camera

2.4 Turning the antenna board to the best angle for best image effect

2.5 Adjust the volume

2.6 Adjust the H Frequency lightly to keep steady image