Antenna Gain Test Report
R900CE External Antenna
for Water Pit Lid Applications - 902-928 MHz Band

Preparer: Tan Quach, RF Engineer

(Digitally signed)

Approver: Quentin Easterling, RF Engineering Manager

(Digitally signed)

Date Issued: October 20, 2023

Contents

Antenna Specifications 3

Test Equipments 3

Test Results 7

Unit 1 data 7

Unit 2 data 13

Unit 3 data 19

Antenna Specifications

Frequency	902 – 928 MHz
Polarization	Linear, omnidirectional
Nominal impedance	50 Ω
VSWR	3:1
Peak Gain	3.9 dBi
Weight	0.38 kg
Operating temperature	-25°C to +65°C
Storage temperature	-40°C to +70°C

Test Equipments

MVG StarLab 6 GHz serial number 1102283-0038

Test software: MVG WaveStudio 23.2.0

Test Personnel: James Bryant

Test date: September 26, 2023

The antennas were tested with MVG StarLab 6 GHz turn-key antenna measurement system. A system diagram is shown Figure 1. Figure 2 shows the antenna under test in the StarLab system.

The system is capable of the following measurements:

- Gain
- Directivity
- Beamwidth
- Cross polar discrimination
- Sidelobe levels
- 3D radiation pattern
- Radiation pattern in any polarization (linear or circular)
- Antenna efficiency
- TRP, TIS, EIRP and EIS

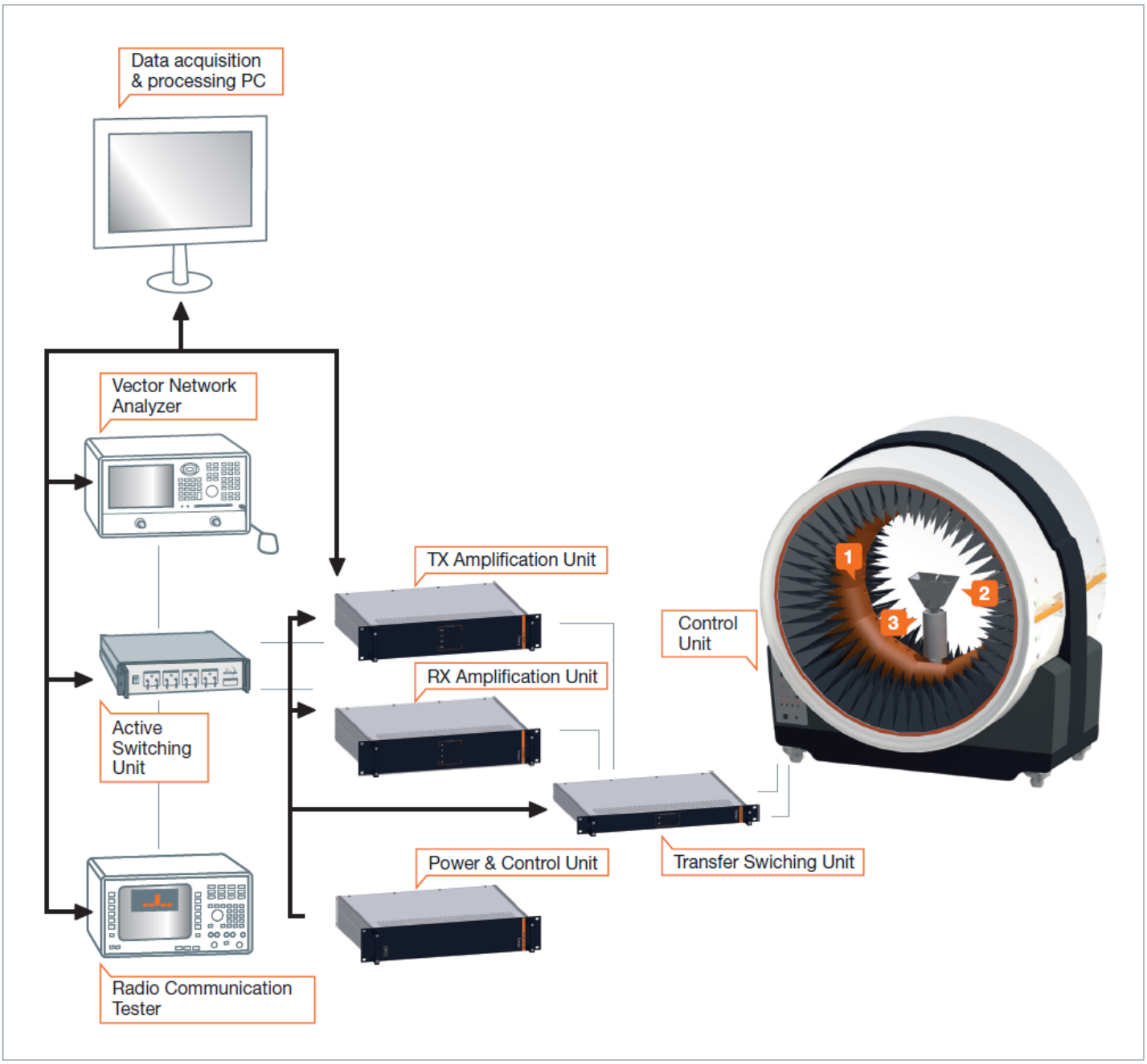

Figure 1 - MVG StarLab 6 GHz system diagram

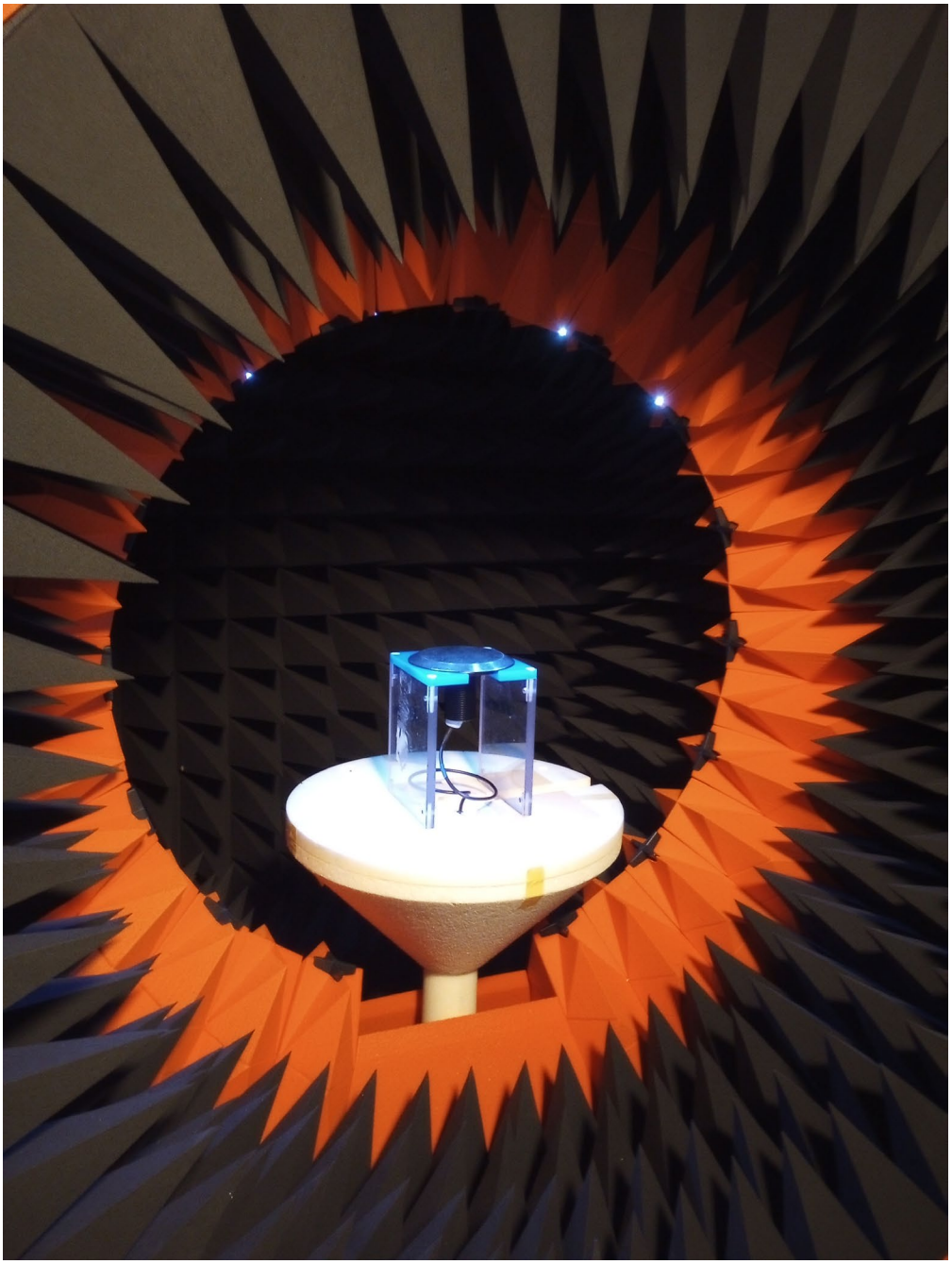

Figure 2 - Antenna Under Test in StarLab system

Test Results

Test results of three units with gain were measured at 902 – 928 MHz. Azimuth, elevation plots of each max gain plane are shown at 902, 908, 915, 921, 928 MHz.

Unit 1 data

Figure 3 shows the gain of unit 1, figures 4 – 13 show the azimuth, elevation gain plots at each max gain plane.

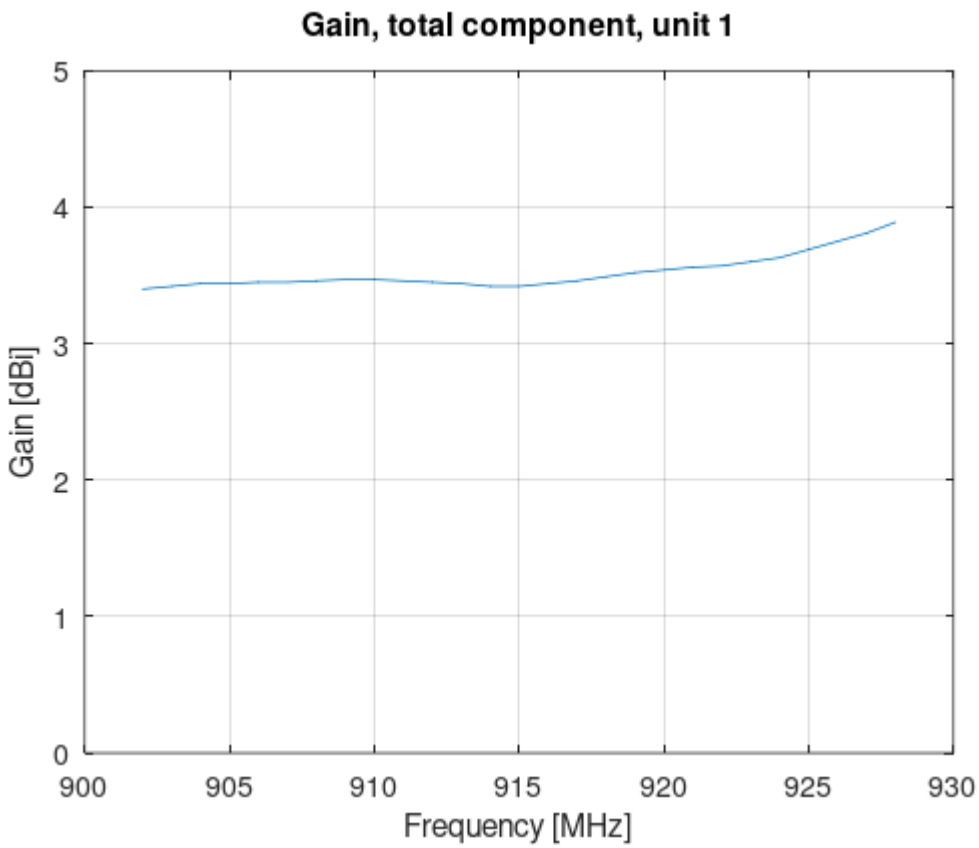

Figure 3 - Unit 1, 900 MHz band gain

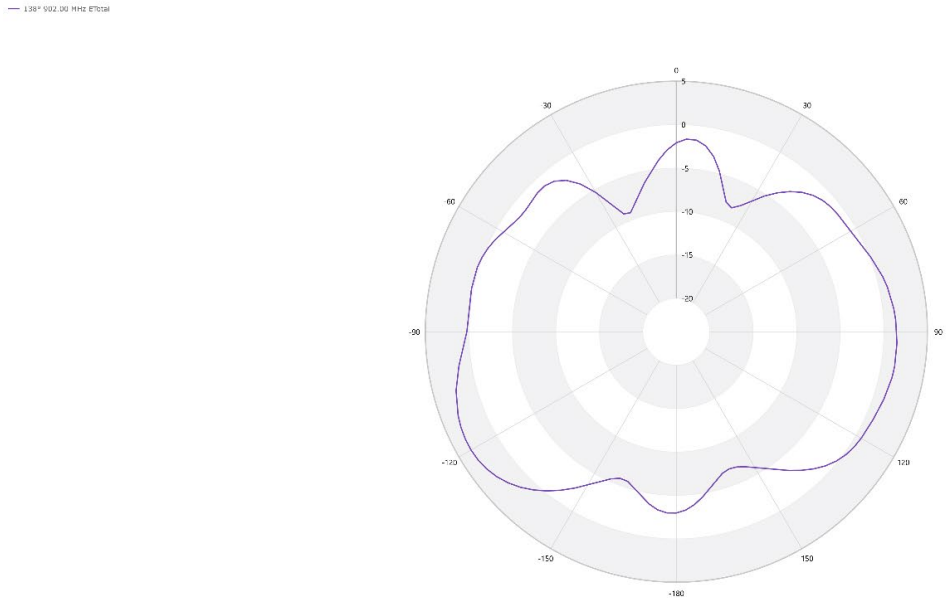

Figure 4 - Elevation cut, unit 1, 902 MHz

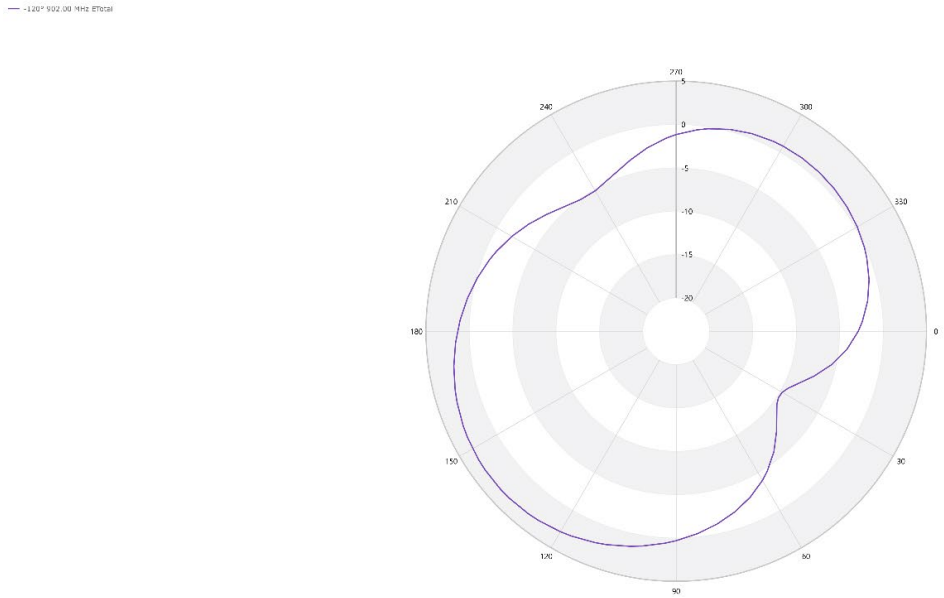

Figure 5 - Azimuth cut, unit 1, 902 MHz

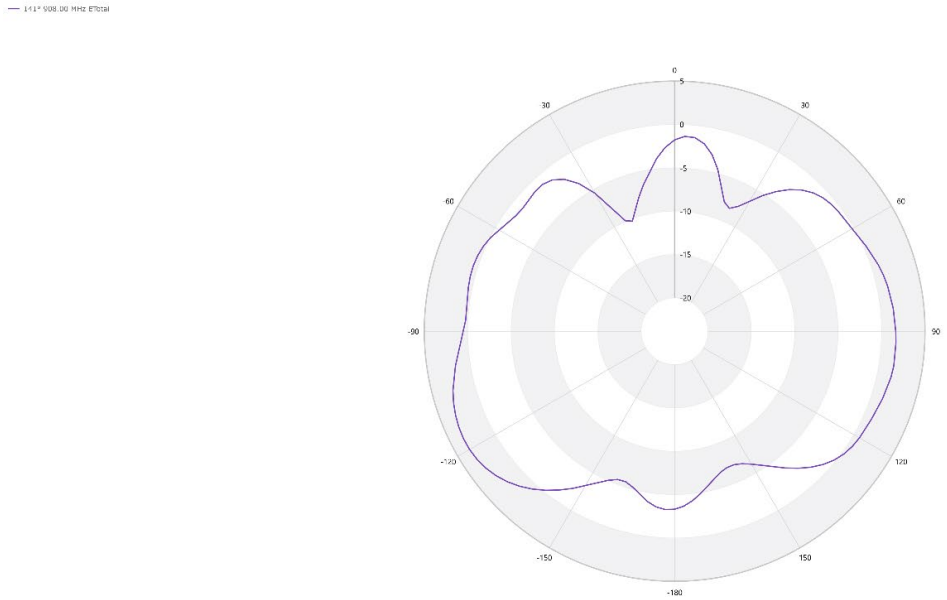

Figure 6 - Elevation cut, unit 1, 908 MHz

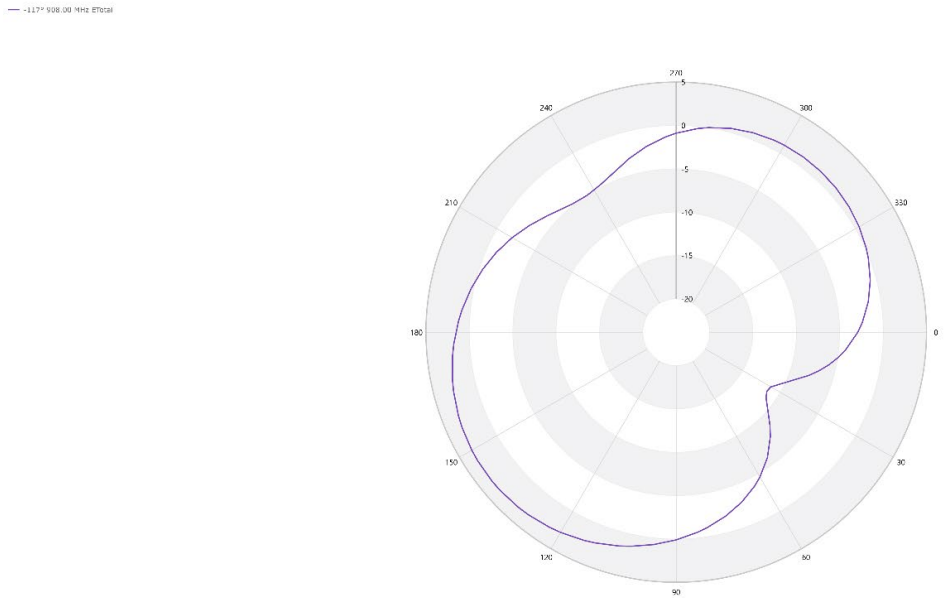

Figure 7 - Azimuth cut, unit 1, 908 MHz

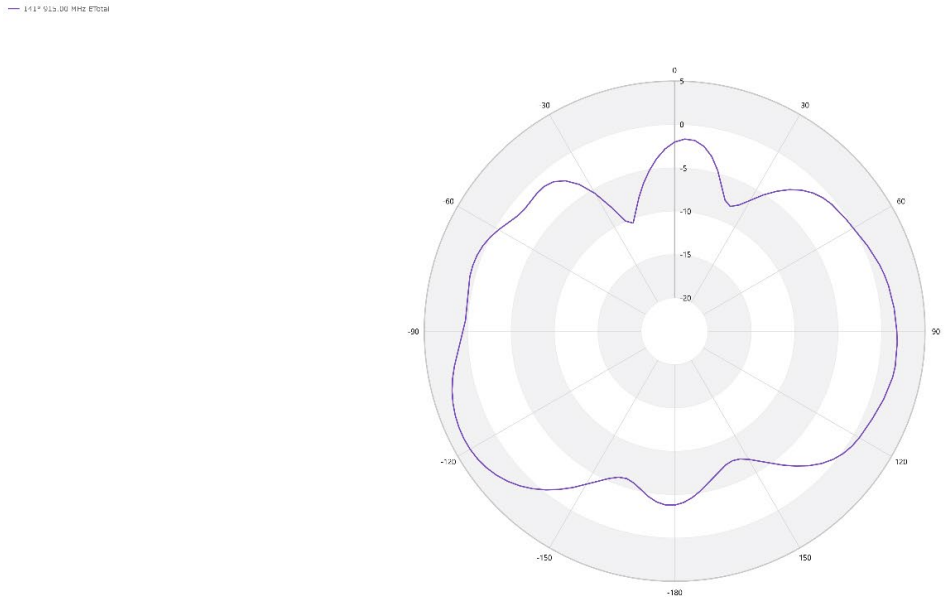

Figure 8 - Elevation cut, unit 1, 915 MHz

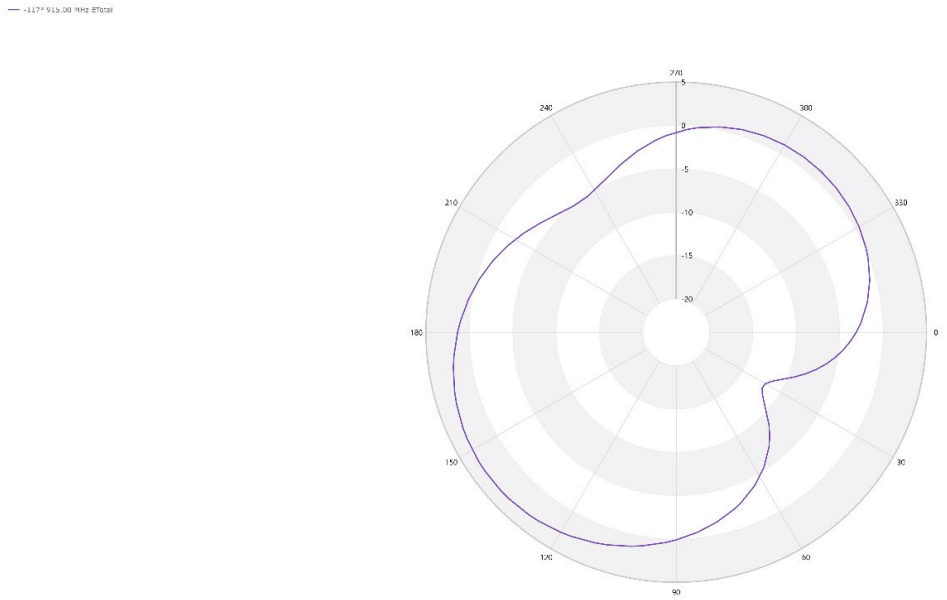

Figure 9 - Azimuth cut, unit 1, 915 MHz

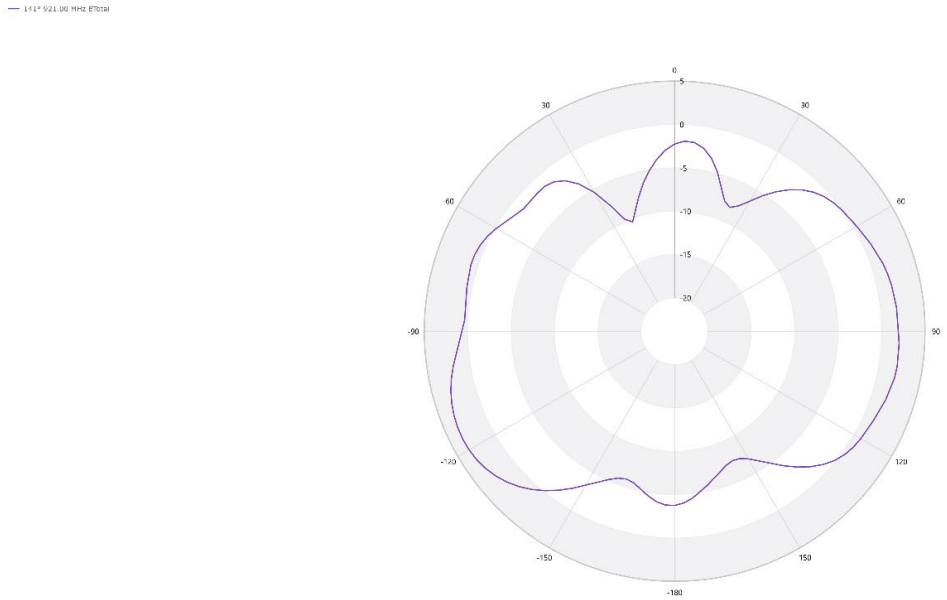

Figure 10 - Elevation cut, unit 1, 921 MHz

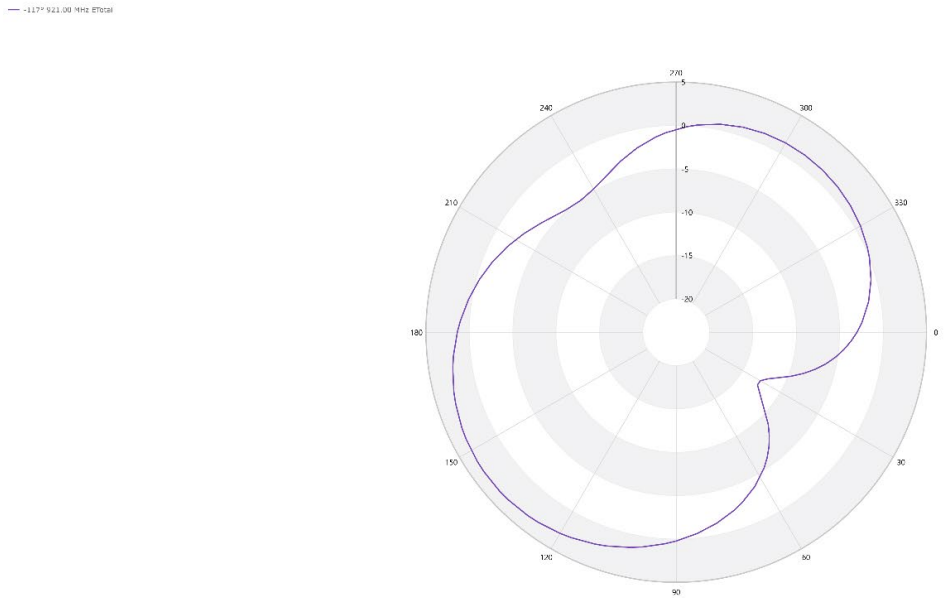

Figure 11 - Azimuth cut, unit 1, 921 MHz

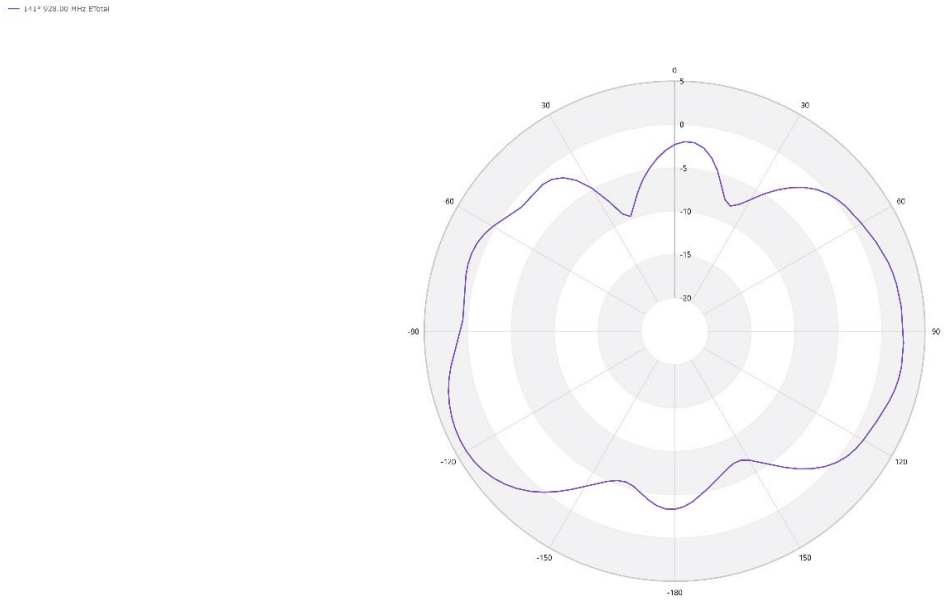

Figure 12 - Elevation cut, unit 1, 928 MHz

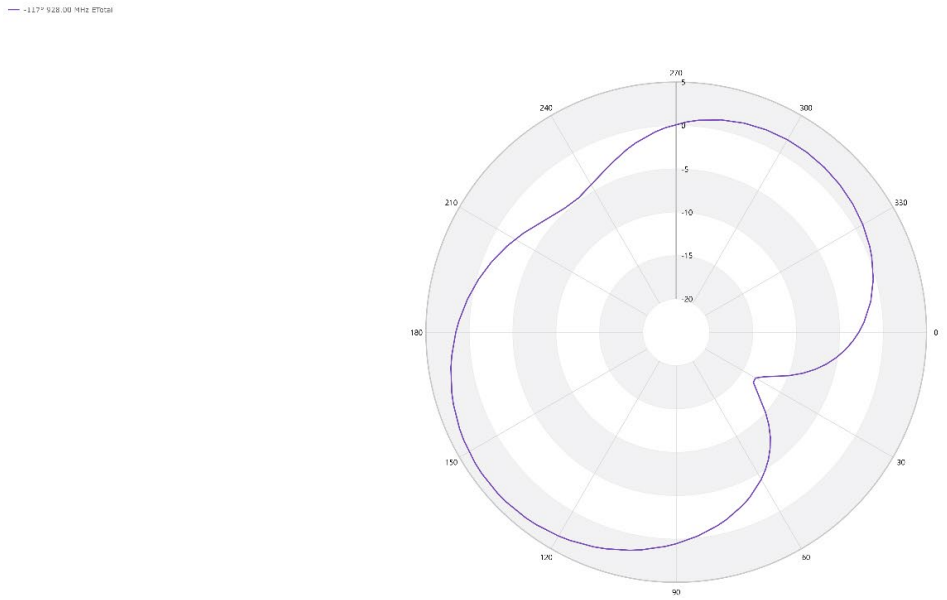

Figure 13 - Azimuth cut, unit 1, 928 MHz

Unit 2 data

Figure 14 shows the gain of unit 2, figures 15 – 24 show the azimuth, elevation gain plots at each max gain plane.

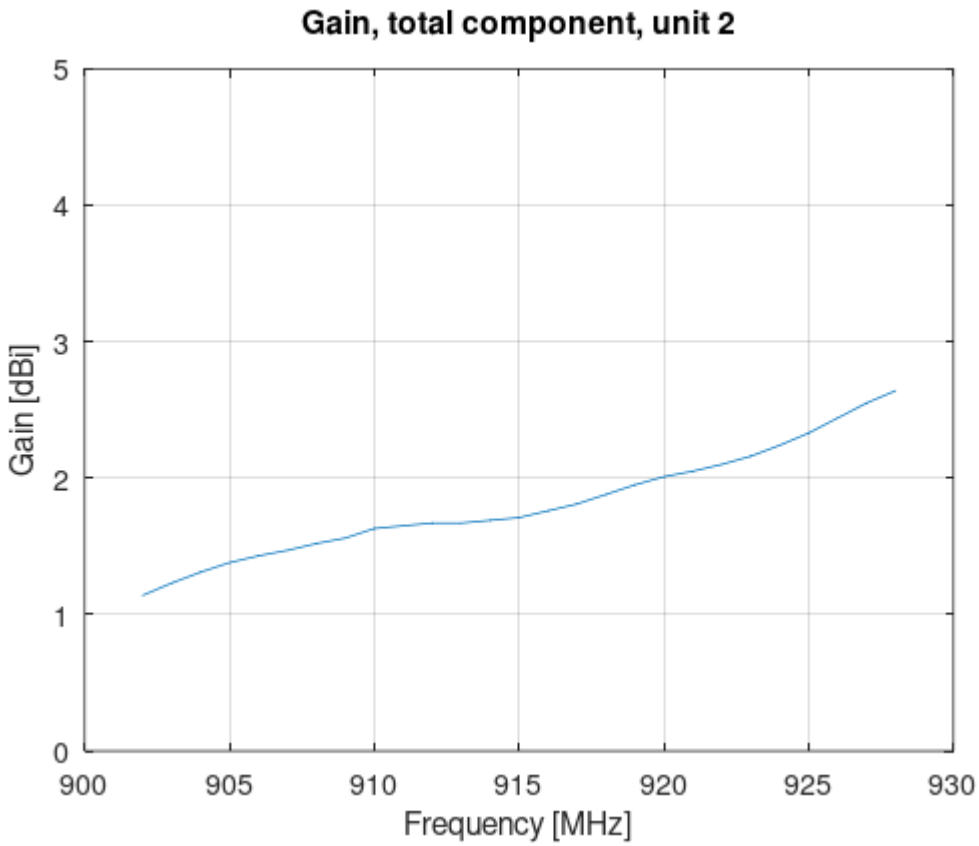

Figure 14 - Unit 2, 900 MHz band gain

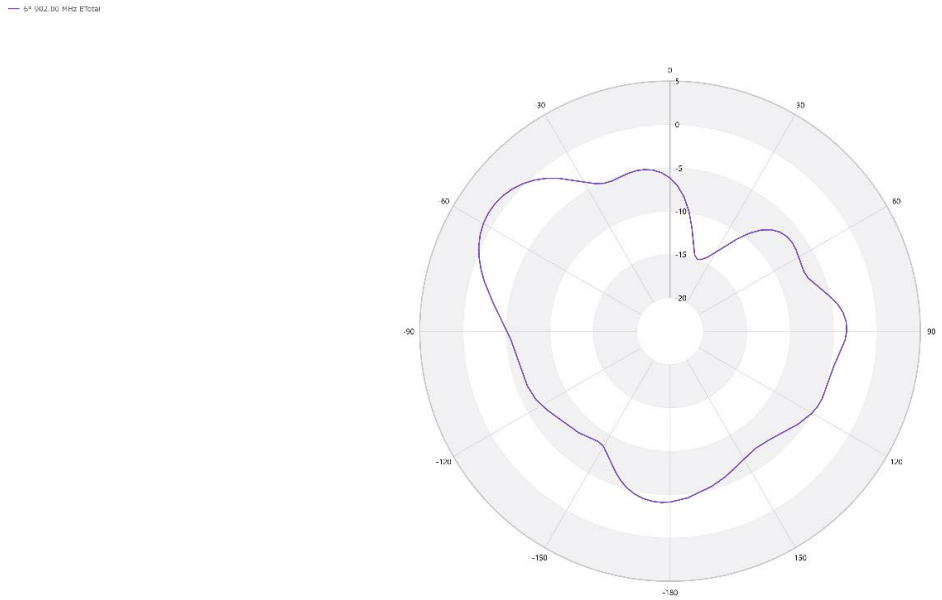

Figure 15 - Elevation cut, unit 2, 902 MHz

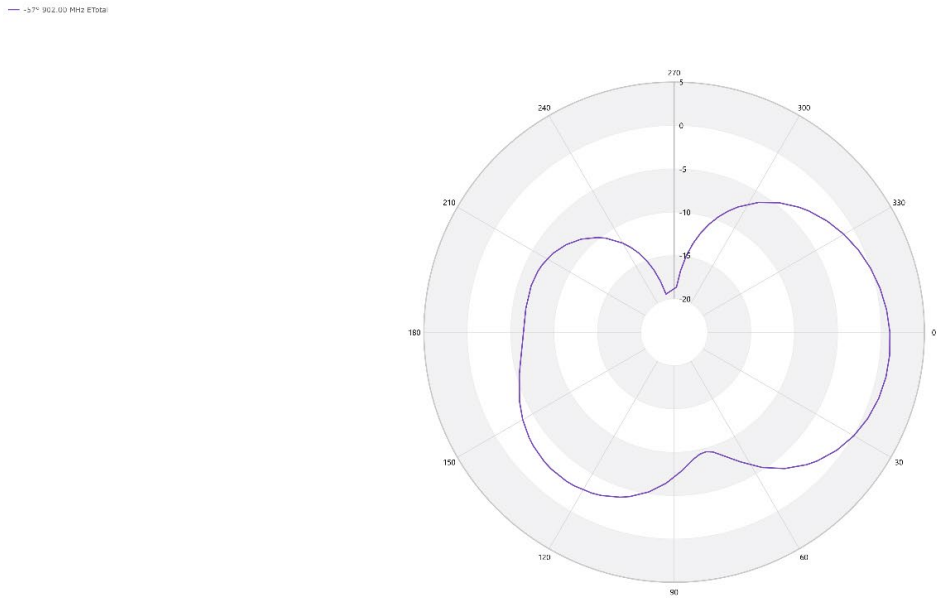

Figure 16 - Azimuth cut, unit 2, 902 MHz

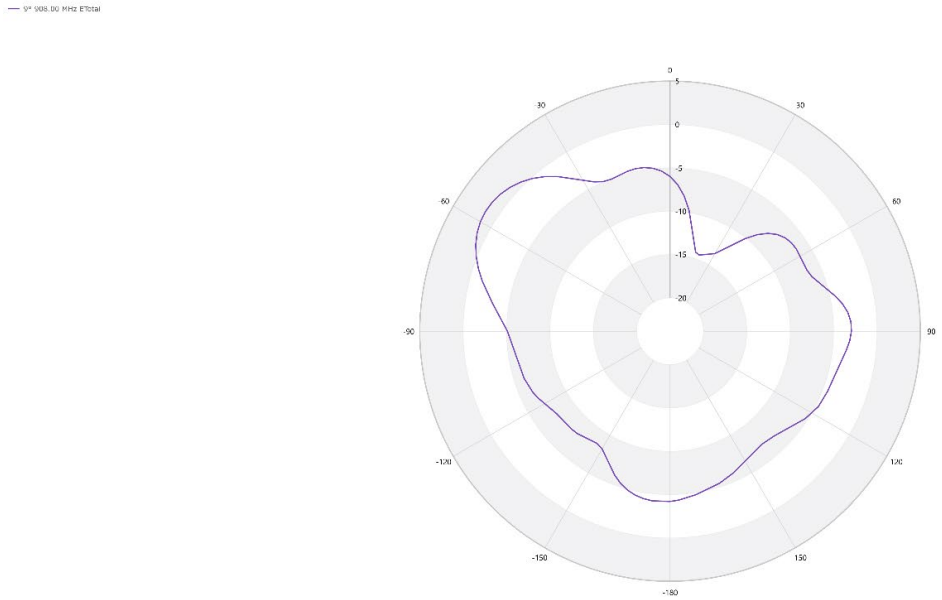

Figure 17 - Elevation cut, unit 2, 908 MHz

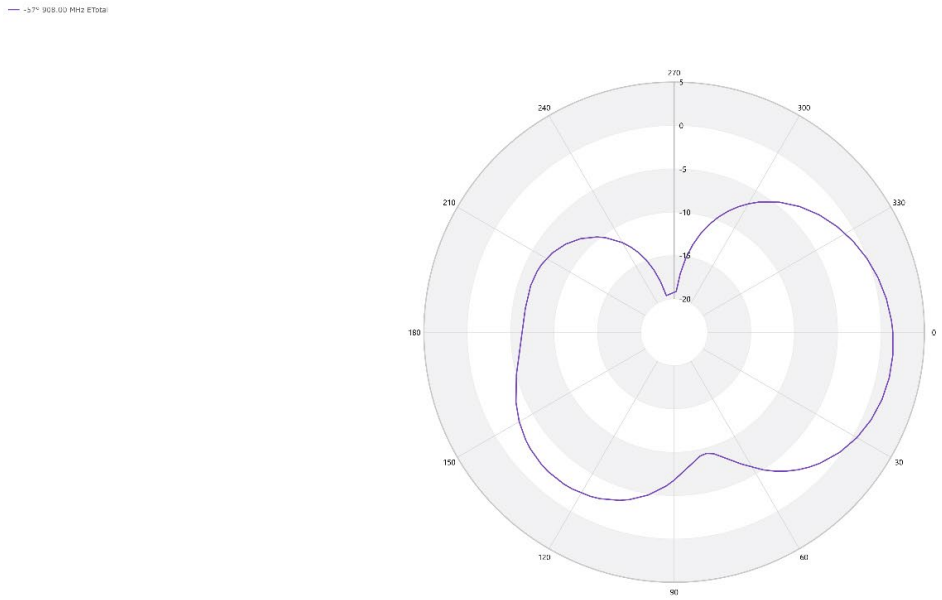

Figure 18 - Azimuth cut, unit 2, 908 MHz

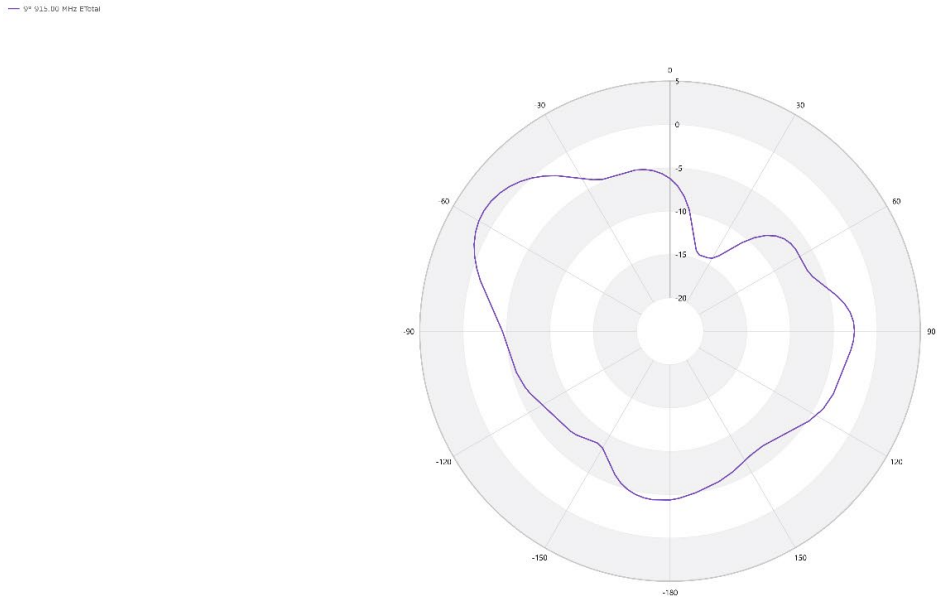

Figure 19 - Elevation cut, unit 2, 915 MHz

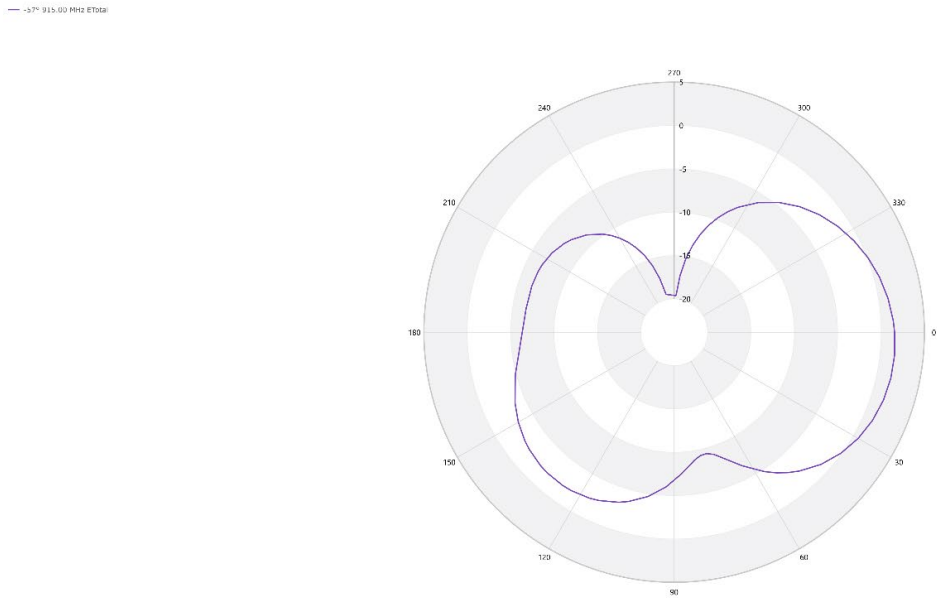

Figure 20 - Azimuth cut, unit 2, 915 MHz

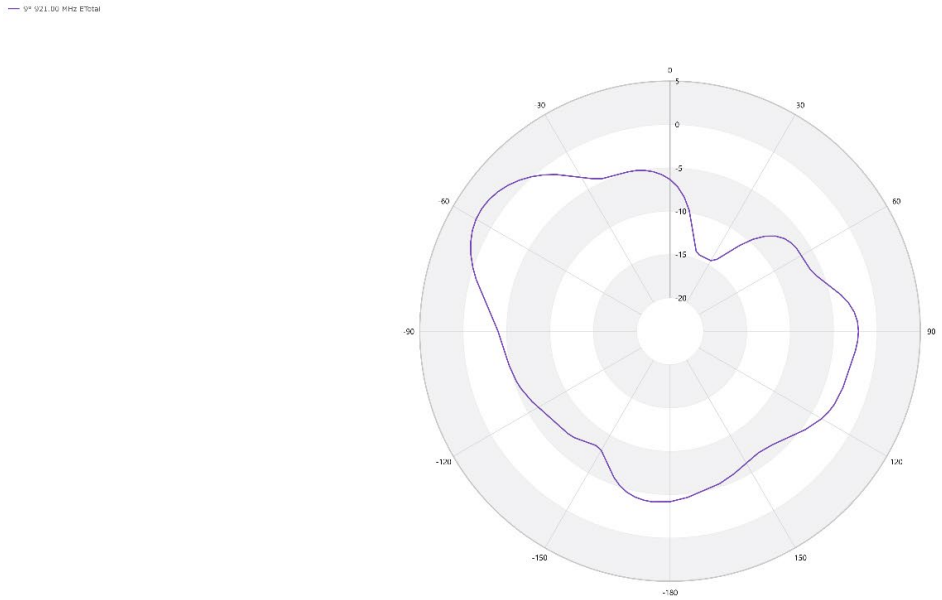

Figure 21 - Elevation cut, unit 2, 921 MHz

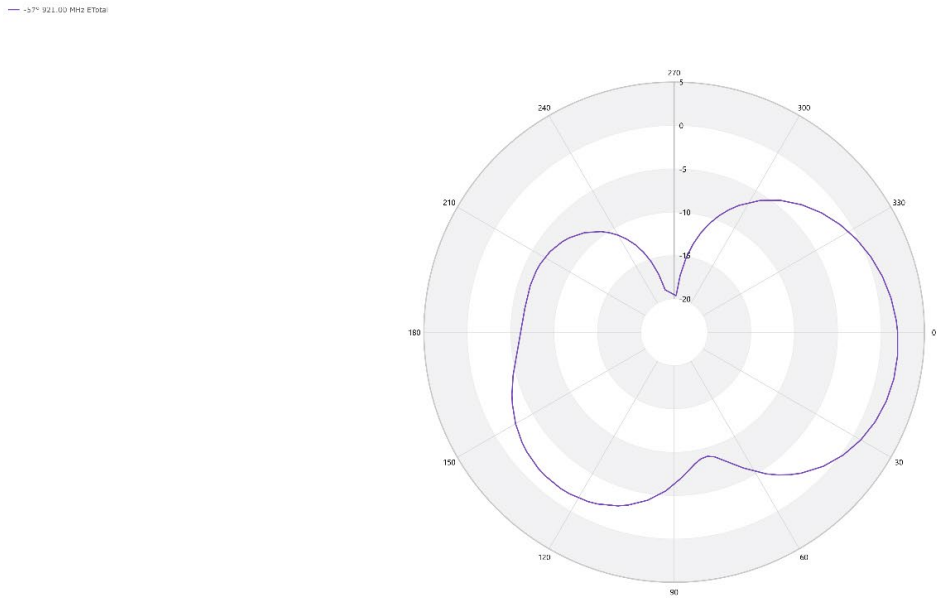

Figure 22 - Azimuth cut, unit 2, 921 MHz

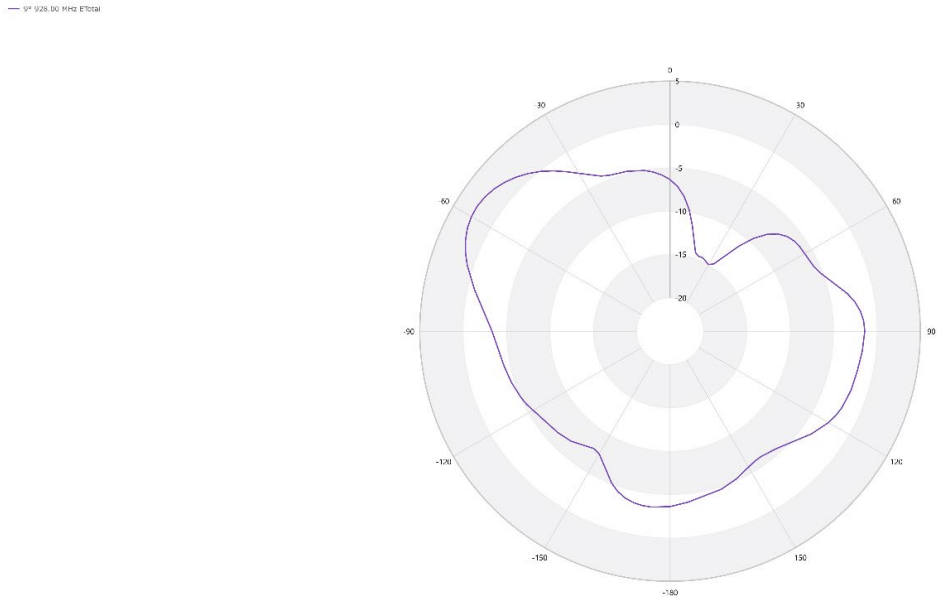

Figure 23 - Elevation cut, unit 2, 928 MHz

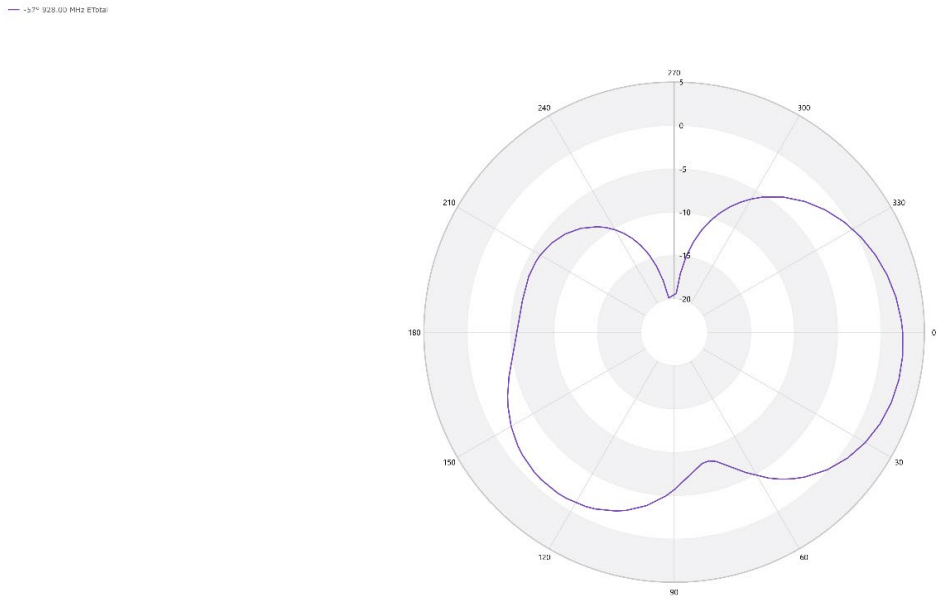

Figure 24 - Azimuth cut, unit 2, 928 MHz

Unit 3 data

Figure 25 shows the gain of unit 3, figures 26 – 35 show the azimuth, elevation gain plots at each max gain plane.

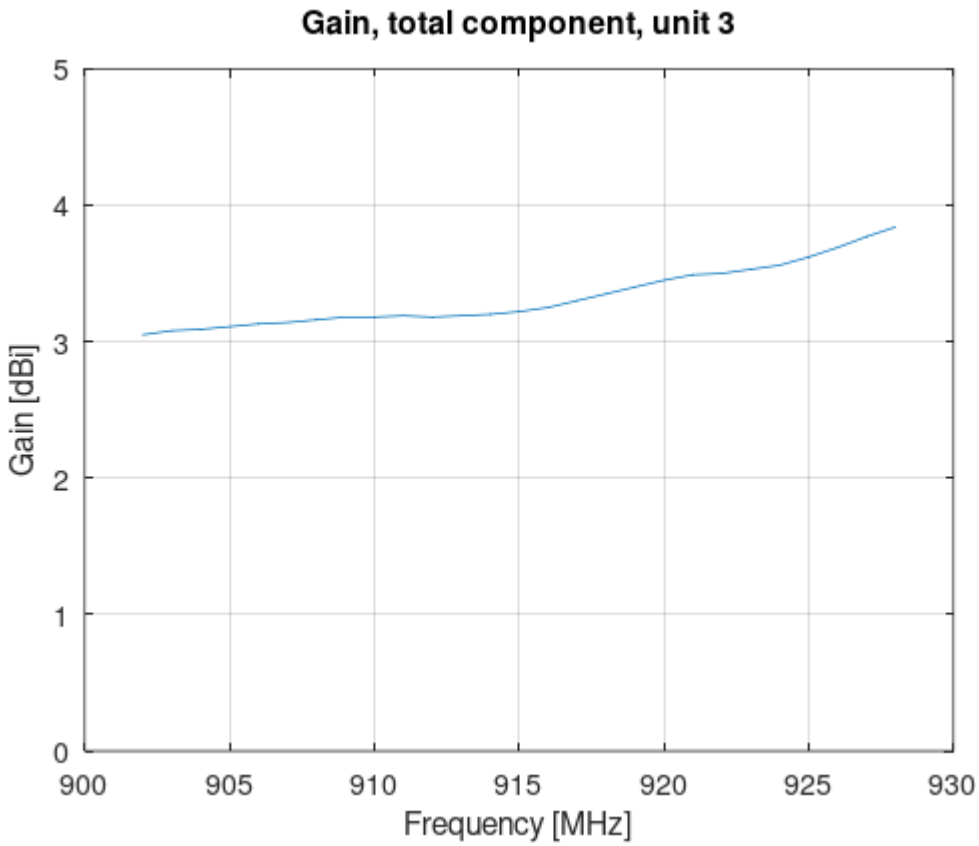

Figure 25 - Unit 3, 900 MHz band gain

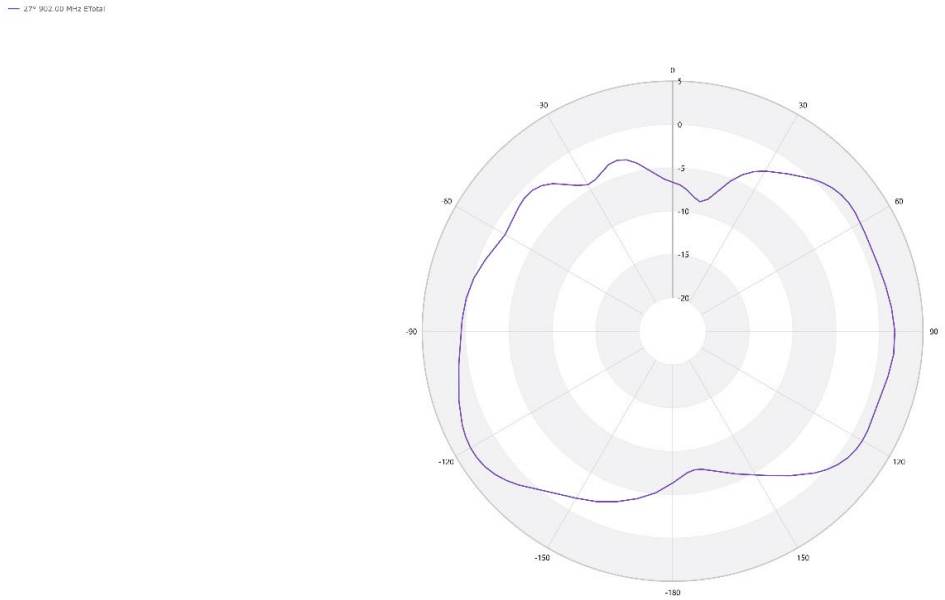

Figure 26 - Elevation cut, unit 3, 902 MHz

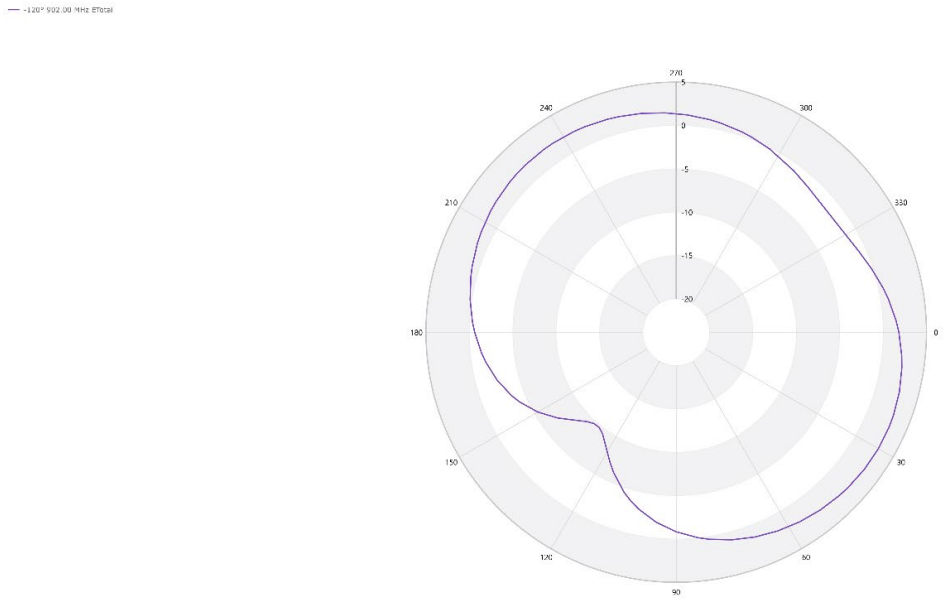

Figure 27 - Azimuth cut, unit 3, 902 MHz

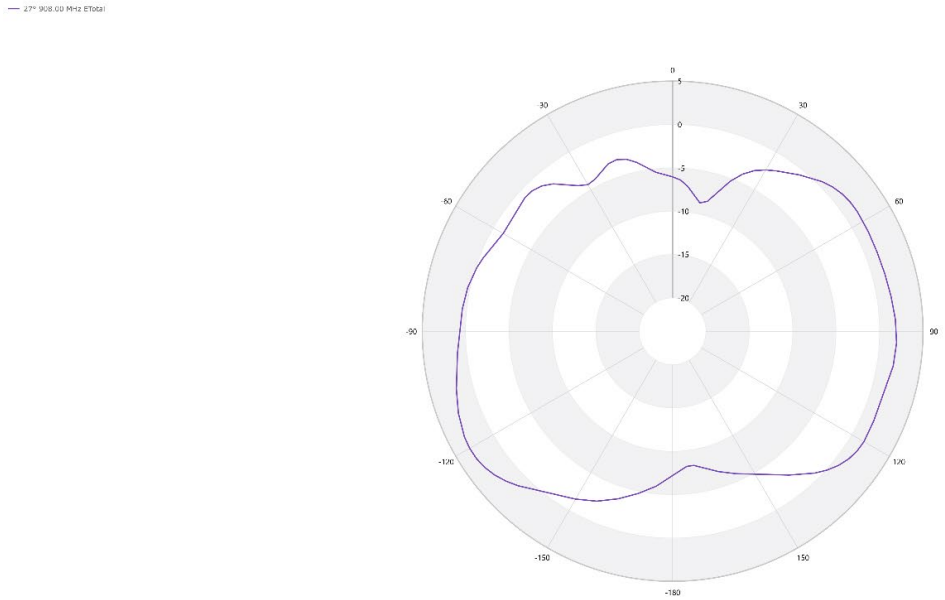

Figure 28 - Elevation cut, unit 3, 908 MHz

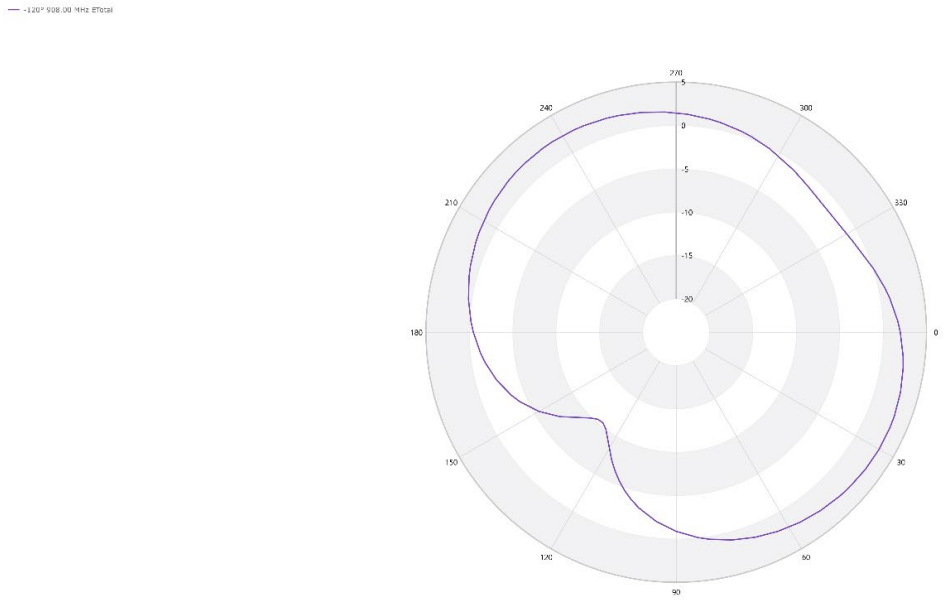

Figure 29 - Azimuth cut, unit 3, 908 MHz

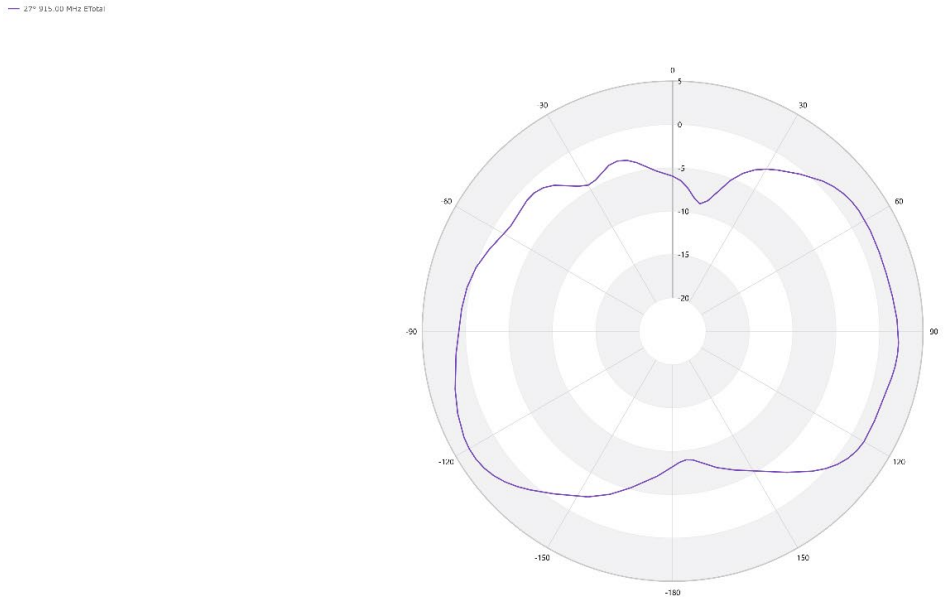

Figure 30 - Elevation cut, unit 3, 915 MHz

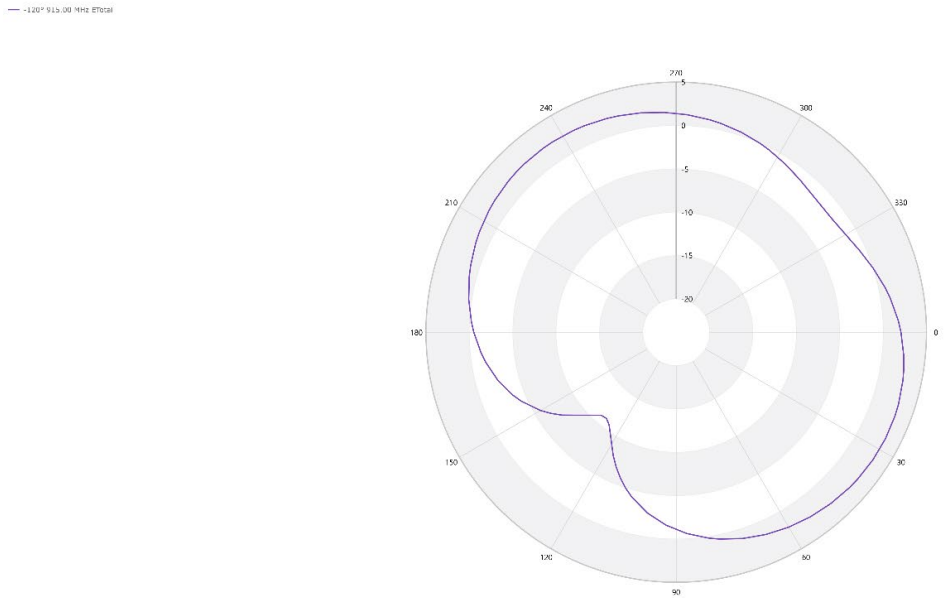

Figure 31 - Azimuth cut, unit 3, 915 MHz

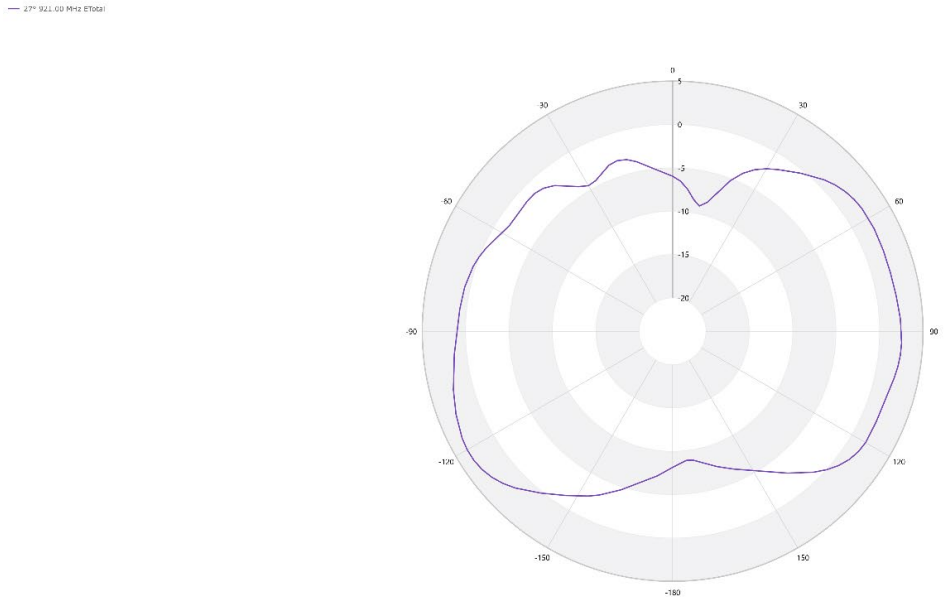

Figure 32 - Elevation cut, unit 3, 921 MHz

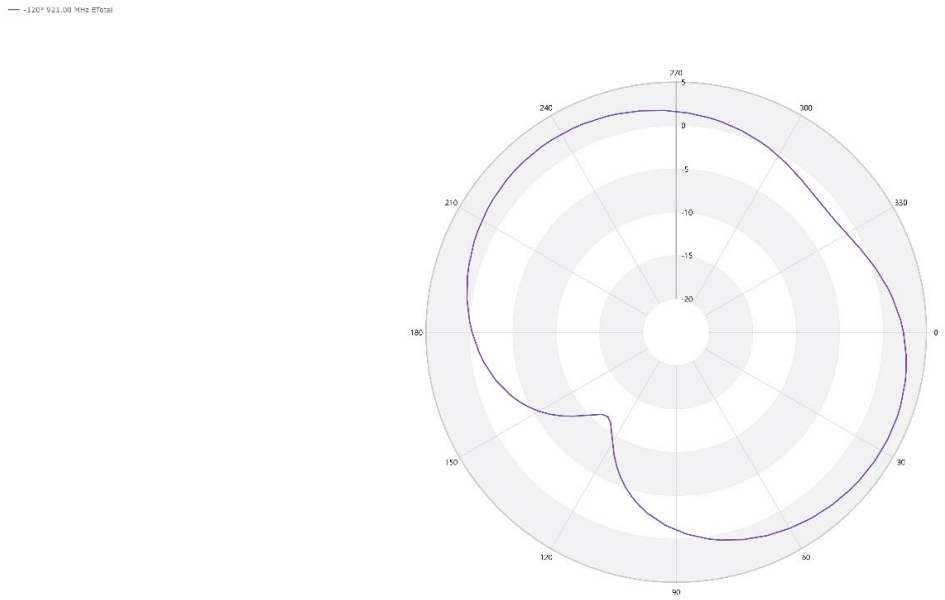

Figure 33 - Azimuth cut, unit 3, 921 MHz

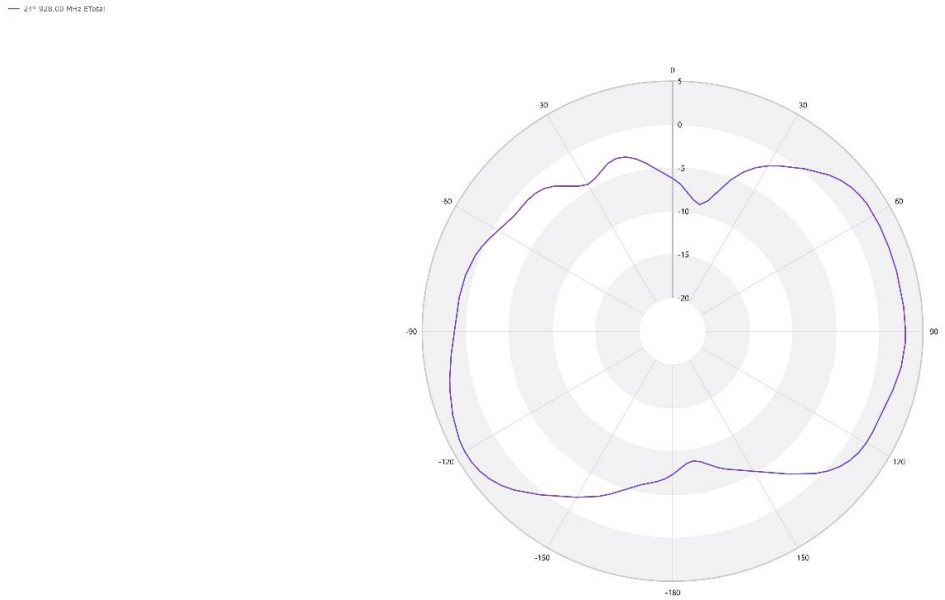

Figure 34 - Elevation cut, unit 3, 928 MHz

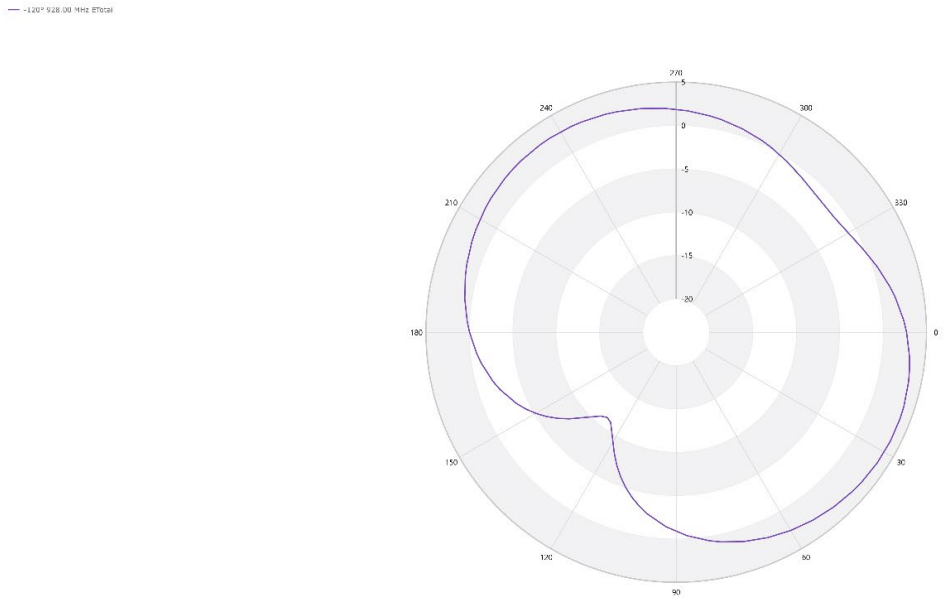

Figure 35 - Azimuth cut, unit 3, 928 MHz

REVISION HISTORY		
Revision	**Revision Date**	**Description**
A	10/20/2023	Initial Release
A.1	4/18/2024	Public Release