# LTE Antenna - 900MHz ISM band report

**Preparer: Tan Quach, RF Engineer**

**(Digitally signed)**

**Approver: Quentin Easterling, RF Engineering Manager**

**(Digitally signed)**

**Date Issued: October 20, 2023**

# Contents

Antenna Specifications ..... 3

Test Equipments ..... 3

Test Results ..... 7

Unit 1 data ..... 7

Unit 2 data ..... 13

Unit 3 data ..... 19

# Antenna Specifications

| | |
|---|---|
| Frequency | 902 – 928 MHz |
| Polarization | Linear, omnidirectional |
| Nominal impedance | 50 Ω |
| VSWR | 3:1 |
| Peak Gain | 6 dBi |
| Weight | 0.38 kg |
| Operating temperature | -25°C to +65°C |
| Storage temperature | -40°C to +70°C |

# Test Equipments

MVG StarLab 6 GHz serial number 1102283-0038

Test software: MVG WaveStudio 23.2.0

Test Personnel: James Bryant

Test date: September 26, 2023

The antennas were tested with MVG StarLab 6 GHz turn-key antenna measurement system. A system diagram is shown Figure 1. Figure 2 shows the antenna under test in the StarLab system.

The system is capable of the following measurements:

- Gain
- Directivity
- Beamwidth
- Cross polar discrimination
- Sidelobe levels
- 3D radiation pattern
- Radiation pattern in any polarization (linear or circular)
- Antenna efficiency
- TRP, TIS, EIRP and EIS

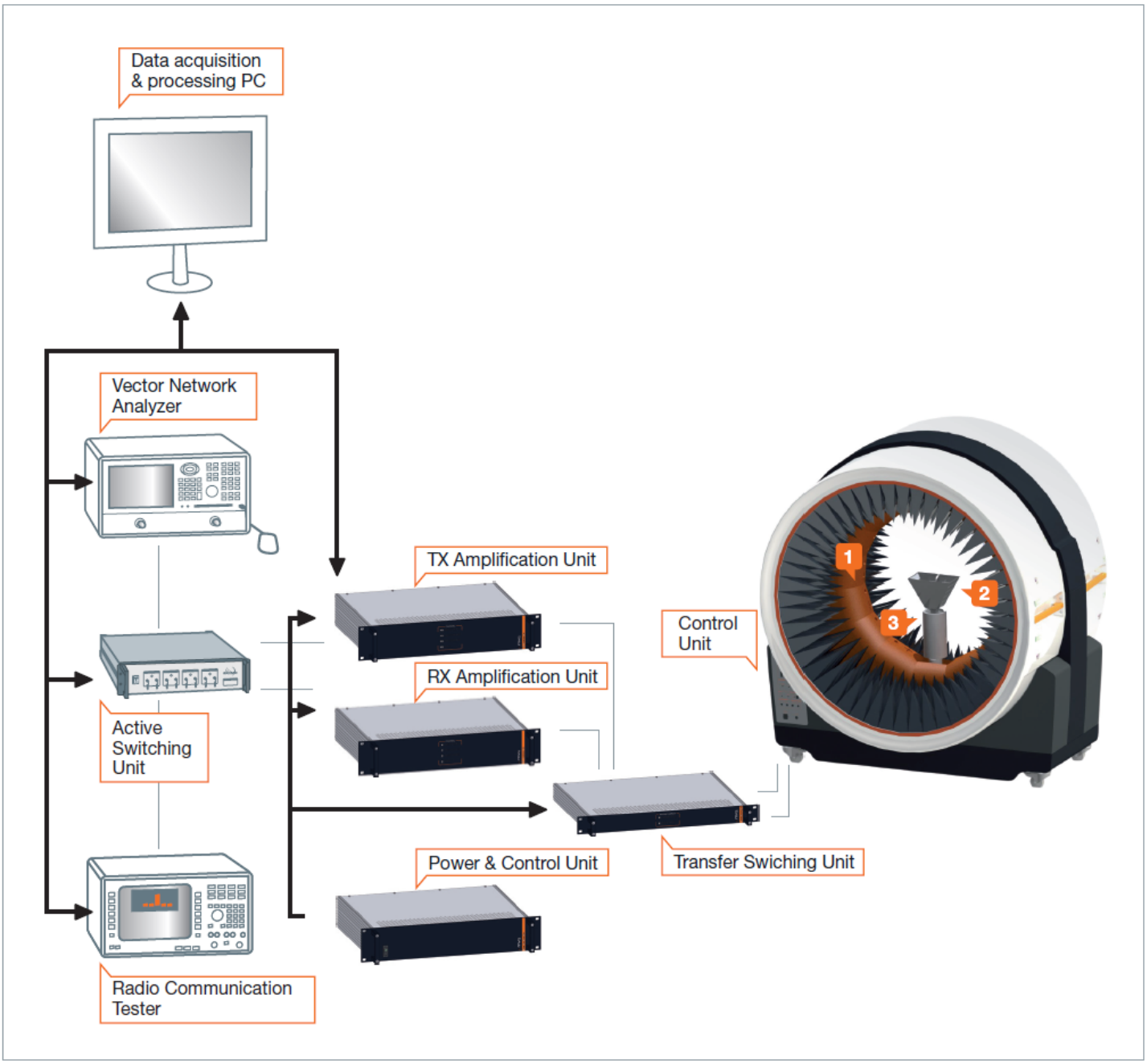


Figure 1 - MVG StarLab 6 GHz system diagram

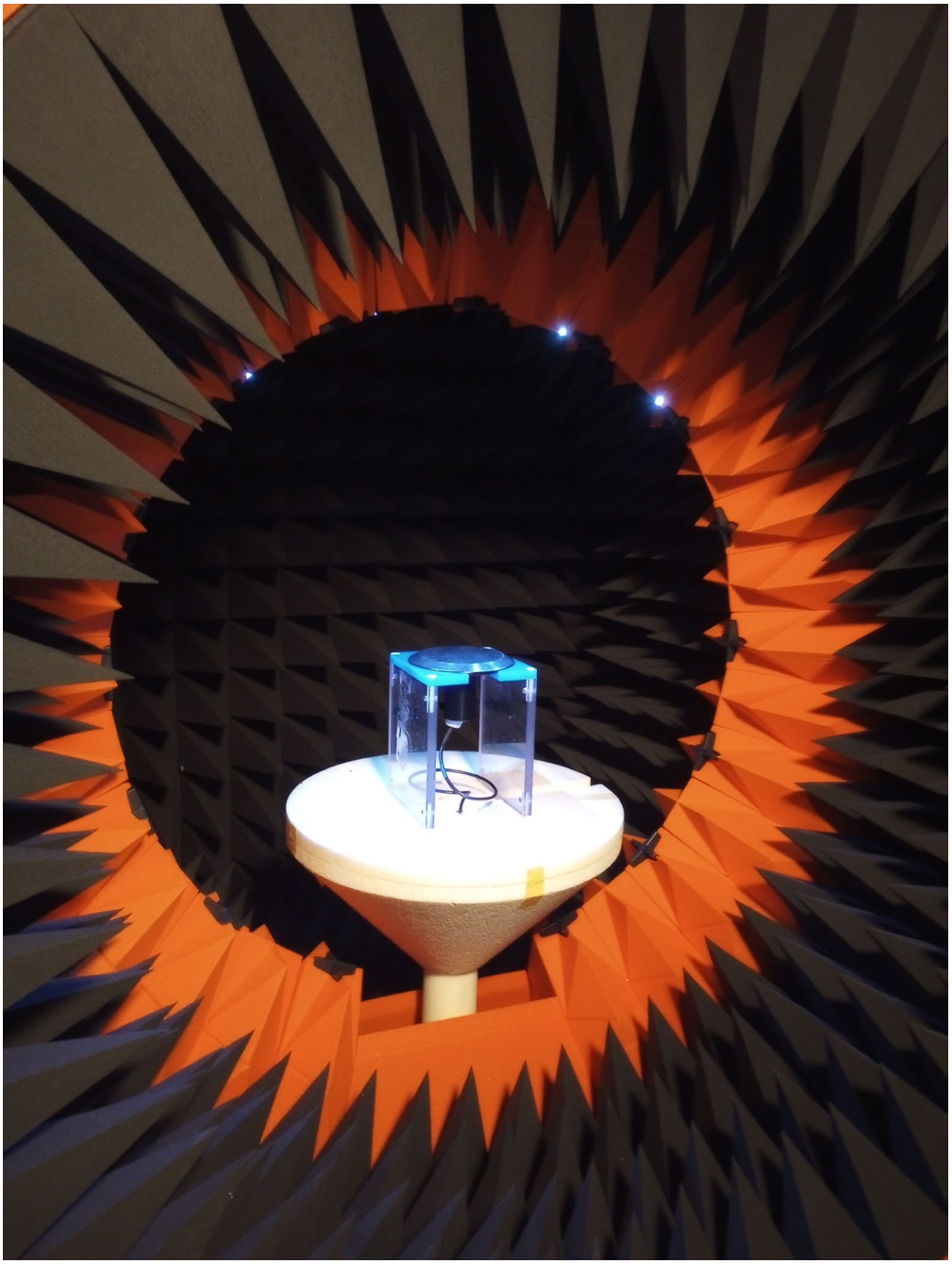

Figure 2 - Antenna Under Test in StarLab system

# Test Results

Test results of three units with gain were measured at 902 – 928 MHz. Azimuth, elevation plots of each max gain plane are shown at 902, 908, 915, 921, 928 MHz.

## Unit 1 data

Figure 3 shows the gain of unit 1, figures 4 – 13 show the azimuth, elevation gain plots at each max gain plane.

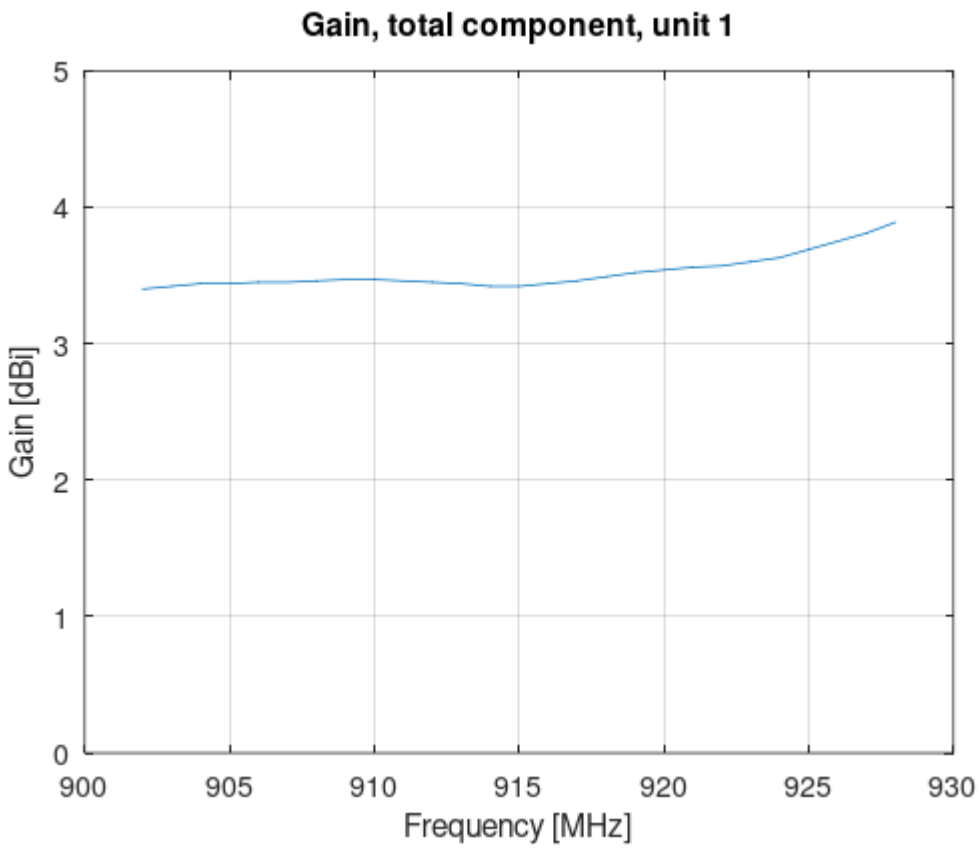


Figure 3 - Unit 1, 900 MHz band gain

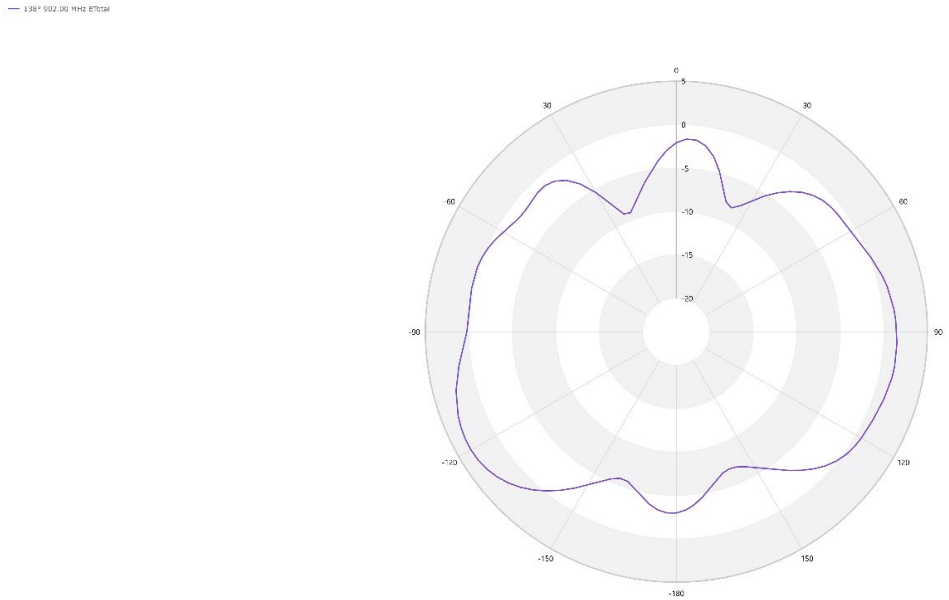


Figure 4 - Elevation cut, unit 1, 902 MHz

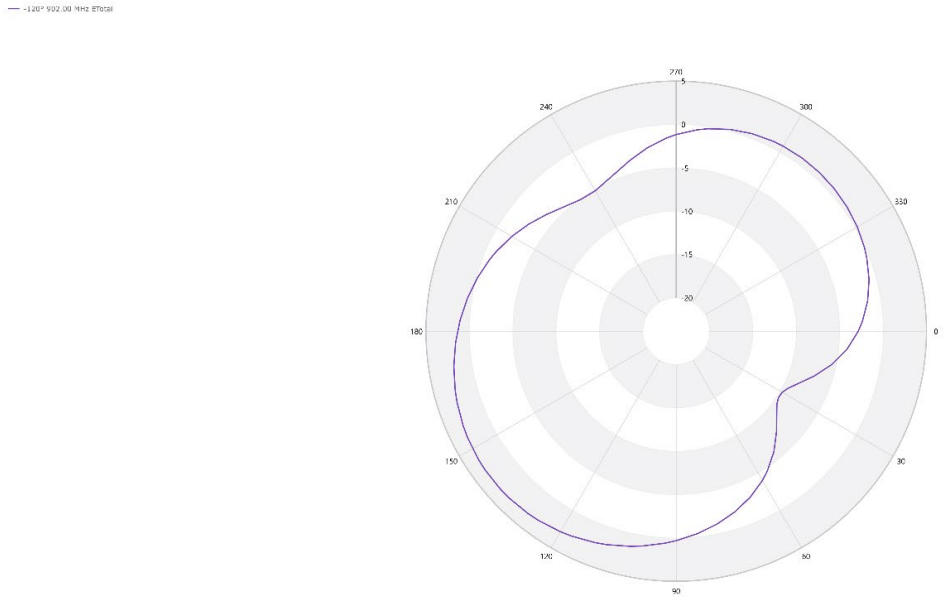


Figure 5 - Azimuth cut, unit 1, 902 MHz

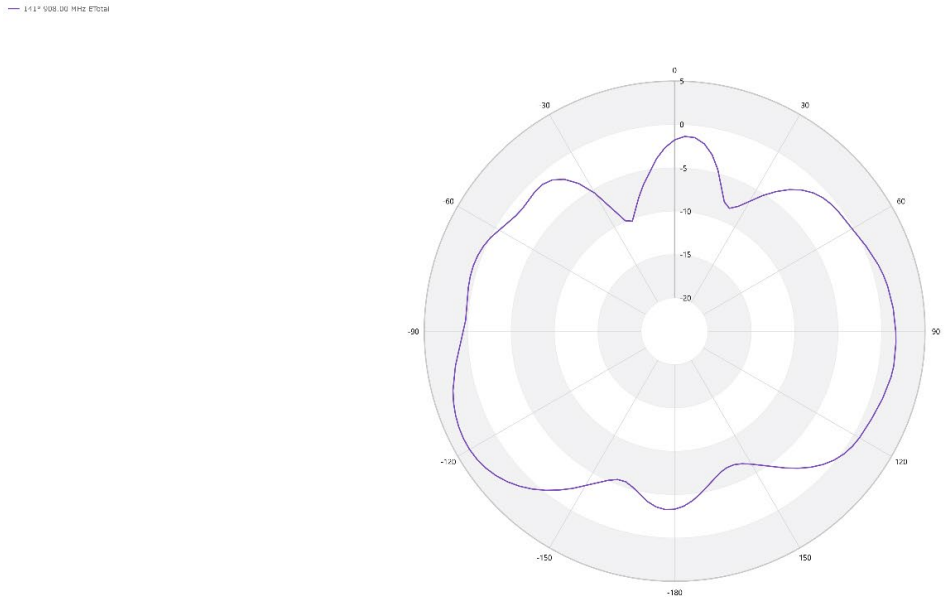


Figure 6 - Elevation cut, unit 1, 908 MHz

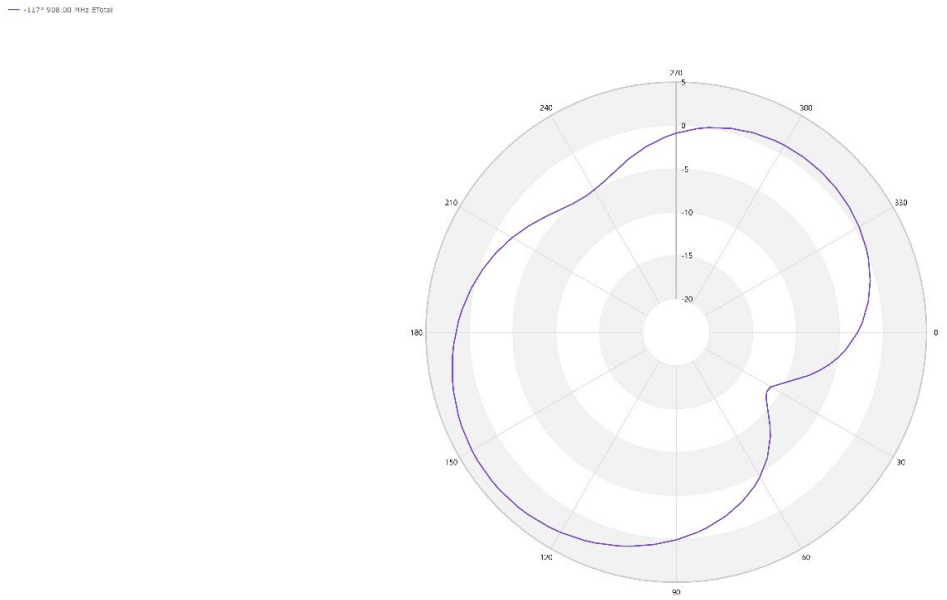


Figure 7 - Azimuth cut, unit 1, 908 MHz

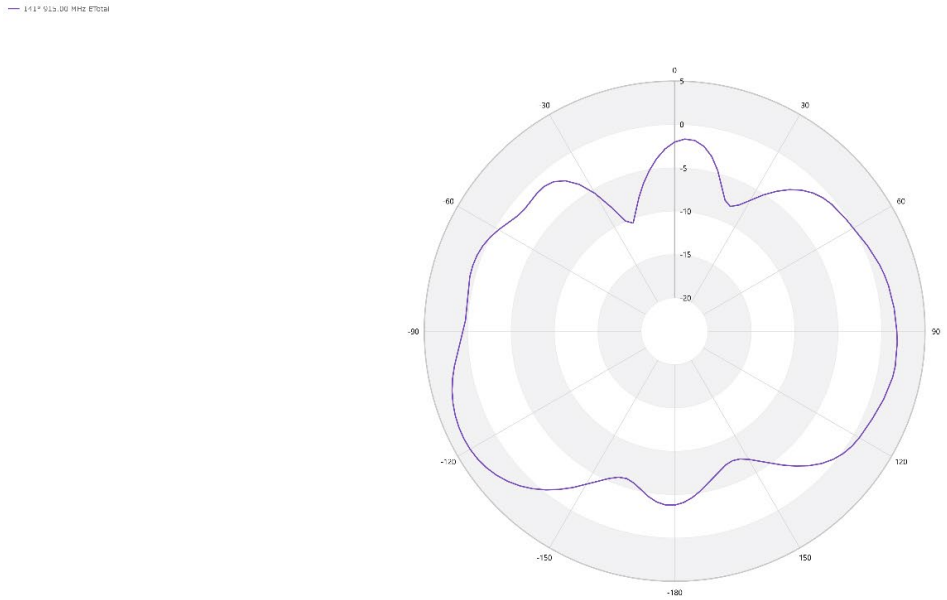


Figure 8 - Elevation cut, unit 1, 915 MHz

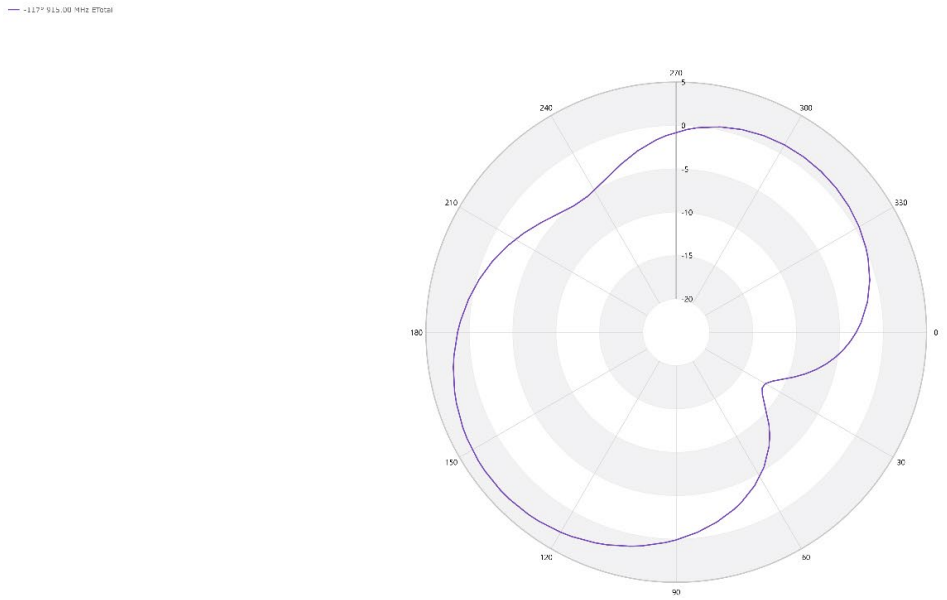


Figure 9 - Azimuth cut, unit 1, 915 MHz

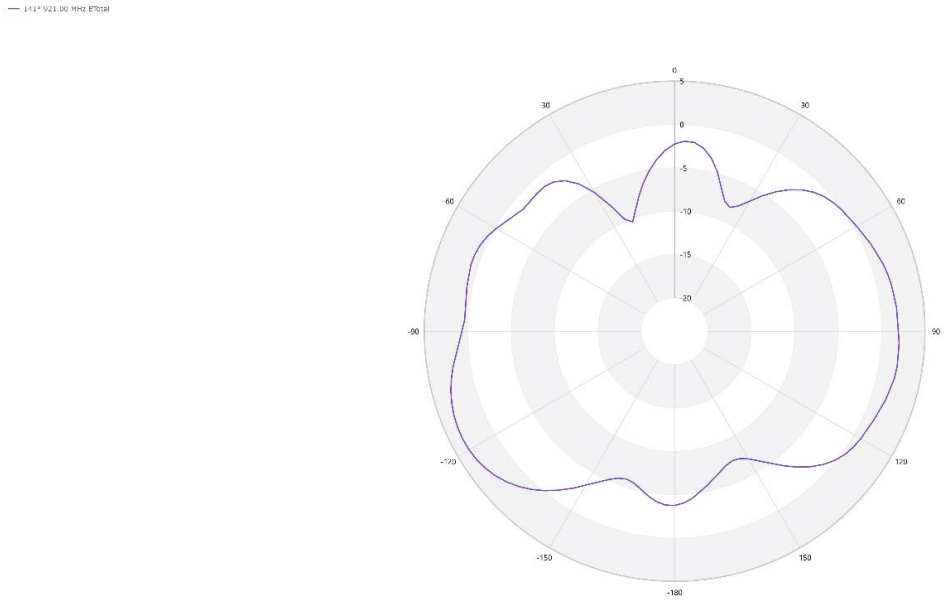


Figure 10 - Elevation cut, unit 1, 921 MHz

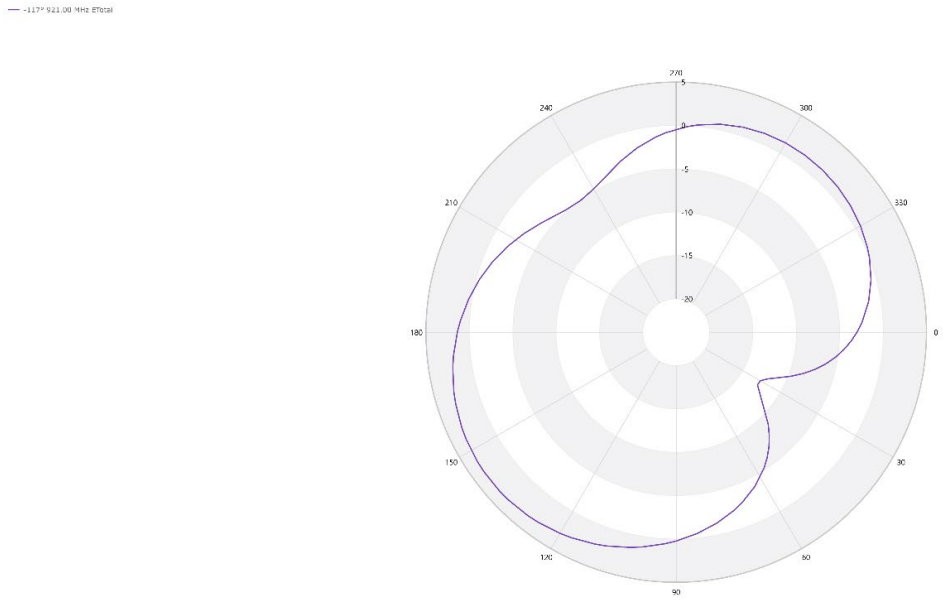


Figure 11 - Azimuth cut, unit 1, 921 MHz

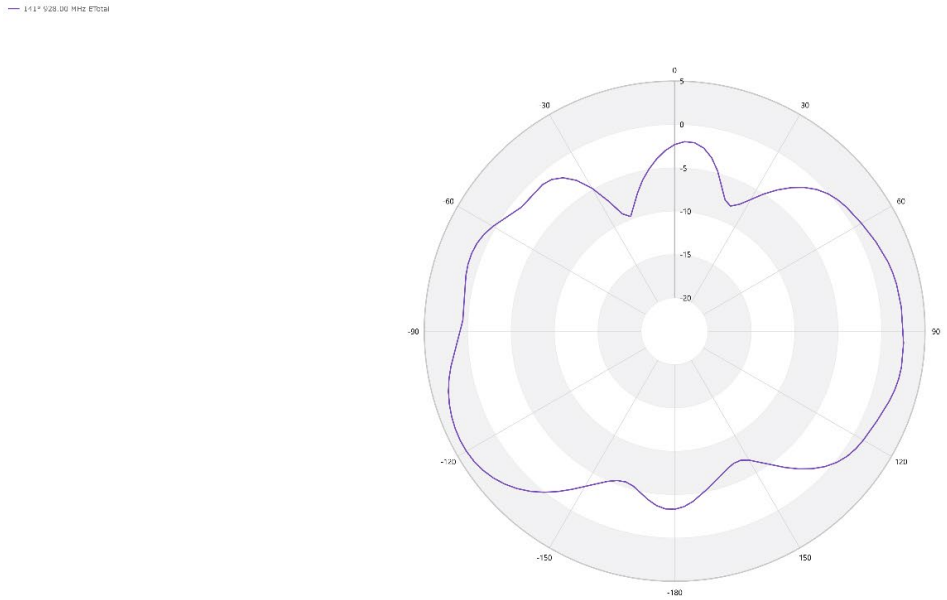


Figure 12 - Elevation cut, unit 1, 928 MHz

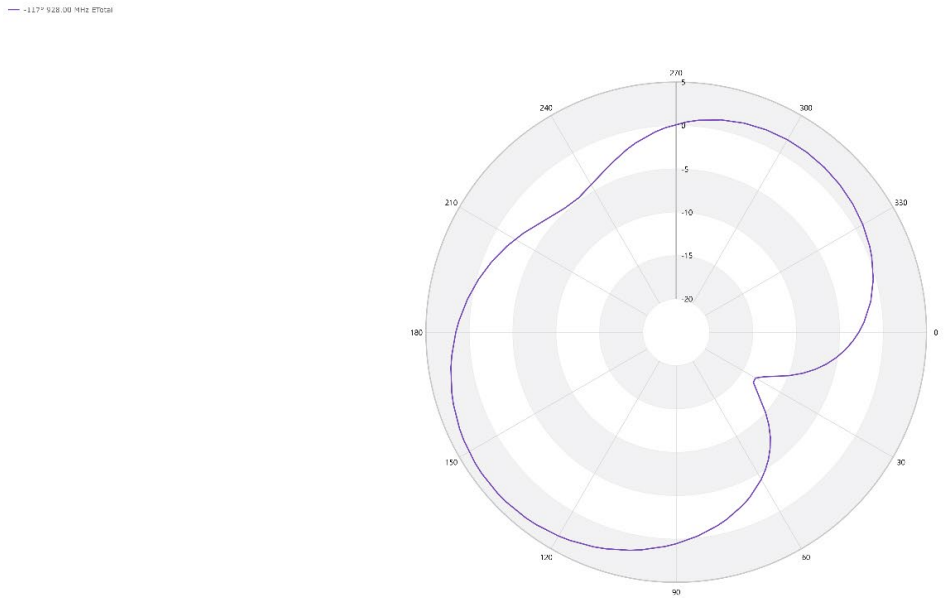


Figure 13 - Azimuth cut, unit 1, 928 MHz

## Unit 2 data

Figure 14 shows the gain of unit 2, figures 15 – 24 show the azimuth, elevation gain plots at each max gain plane.

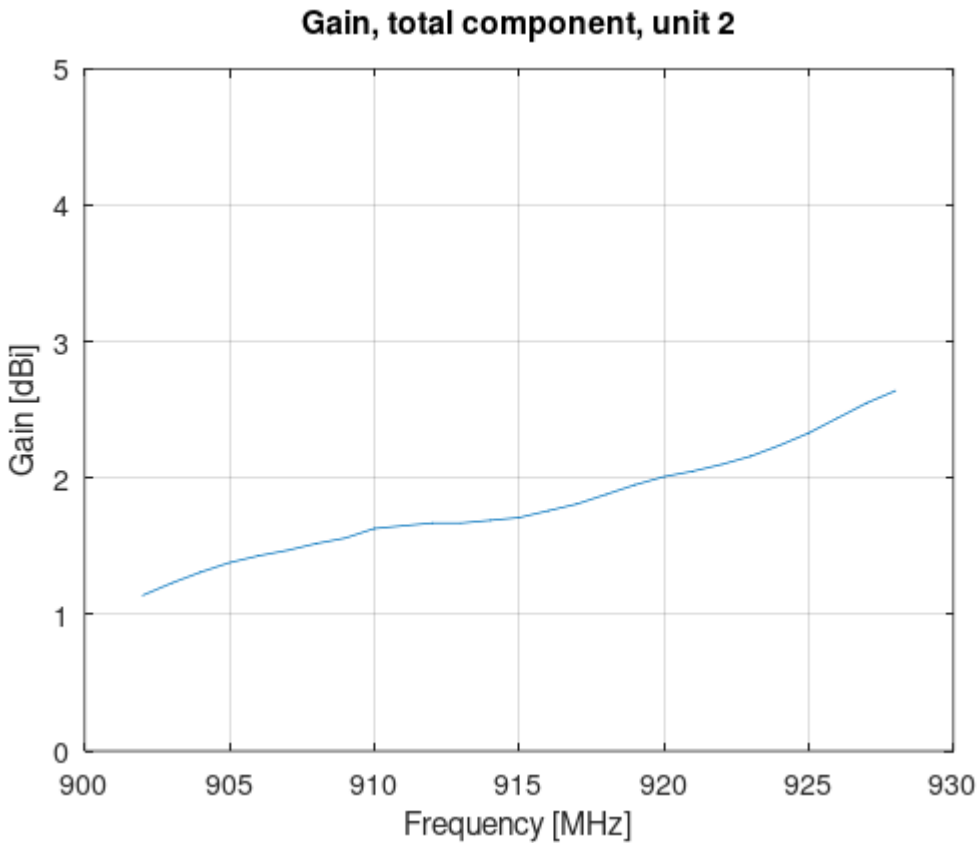


Figure 14 - Unit 2, 900 MHz band gain

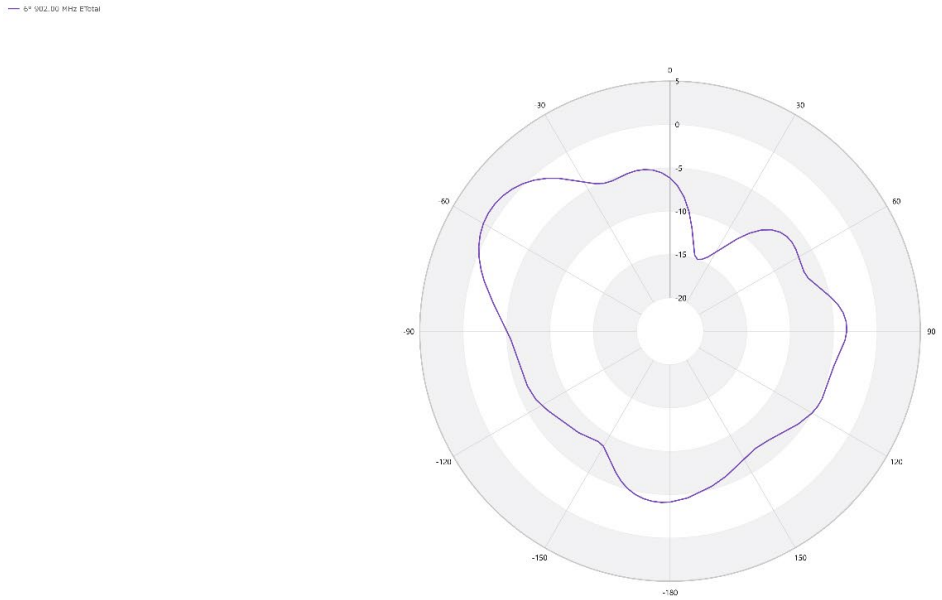


Figure 15 - Elevation cut, unit 2, 902 MHz

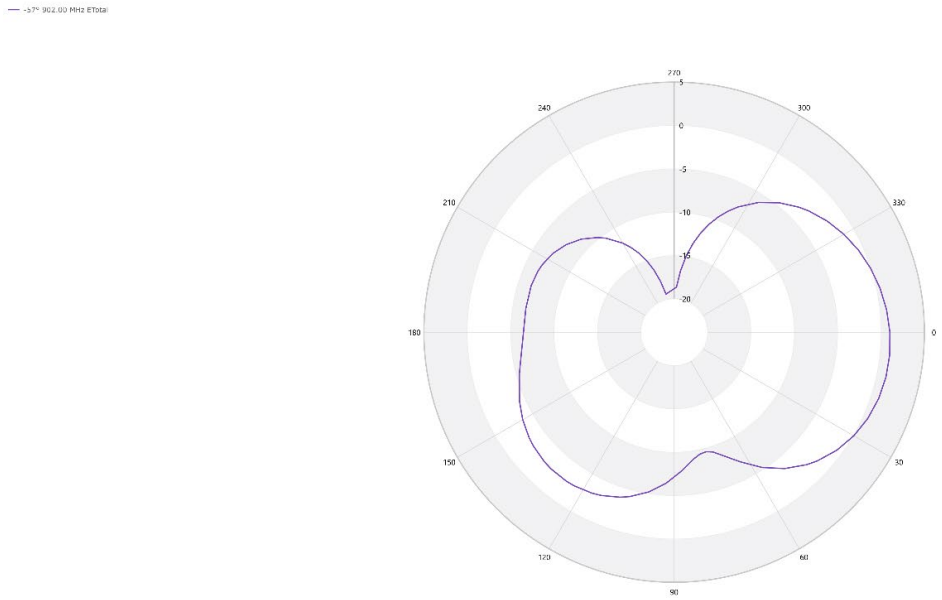


Figure 16 - Azimuth cut, unit 2, 902 MHz

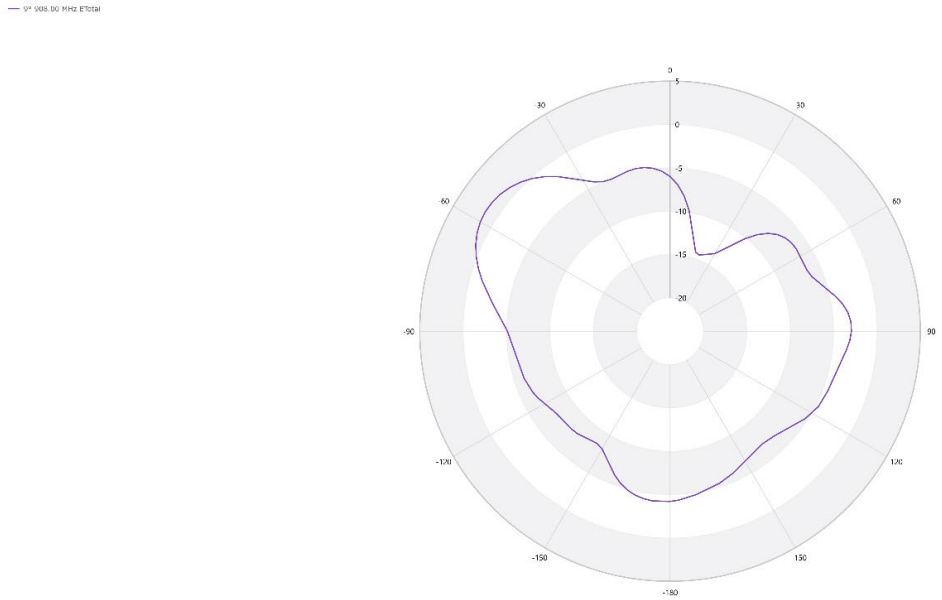


Figure 17 - Elevation cut, unit 2, 908 MHz

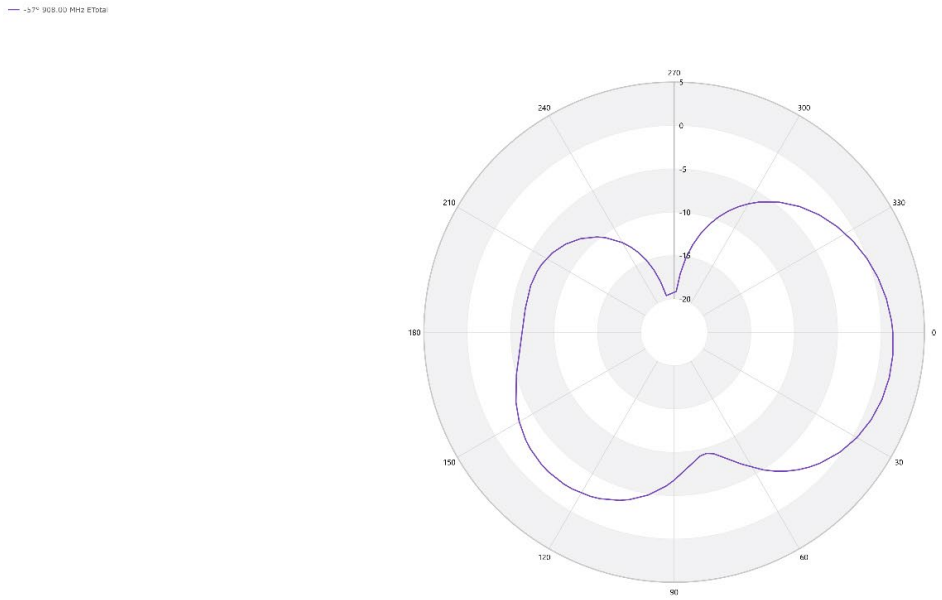


Figure 18 - Azimuth cut, unit 2, 908 MHz

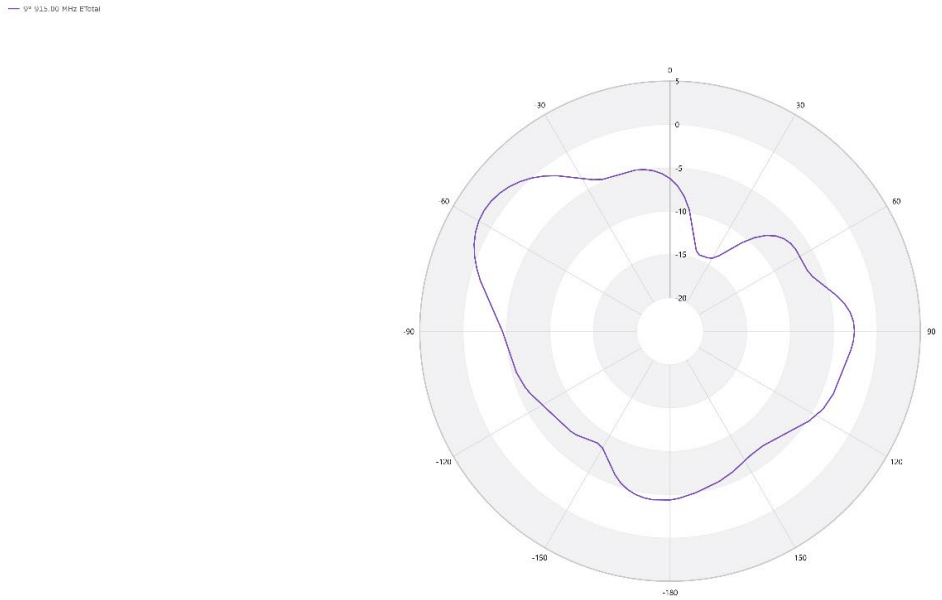


Figure 19 - Elevation cut, unit 2, 915 MHz

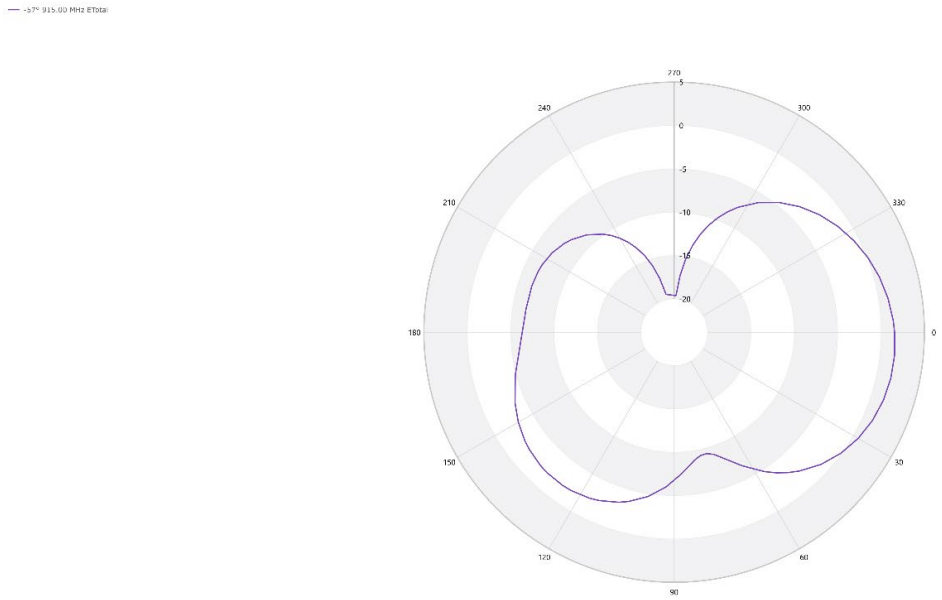


Figure 20 - Azimuth cut, unit 2, 915 MHz

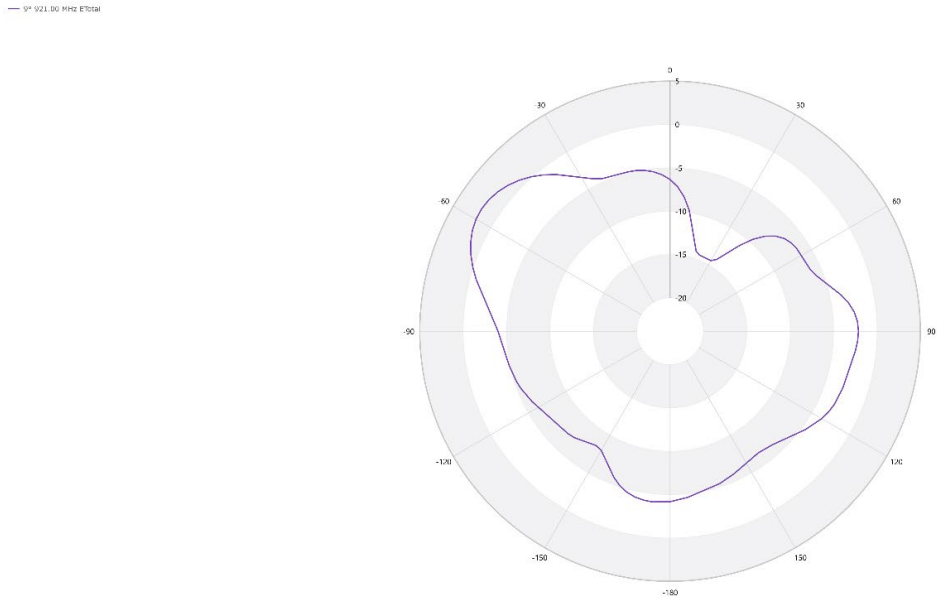


Figure 21 - Elevation cut, unit 2, 921 MHz

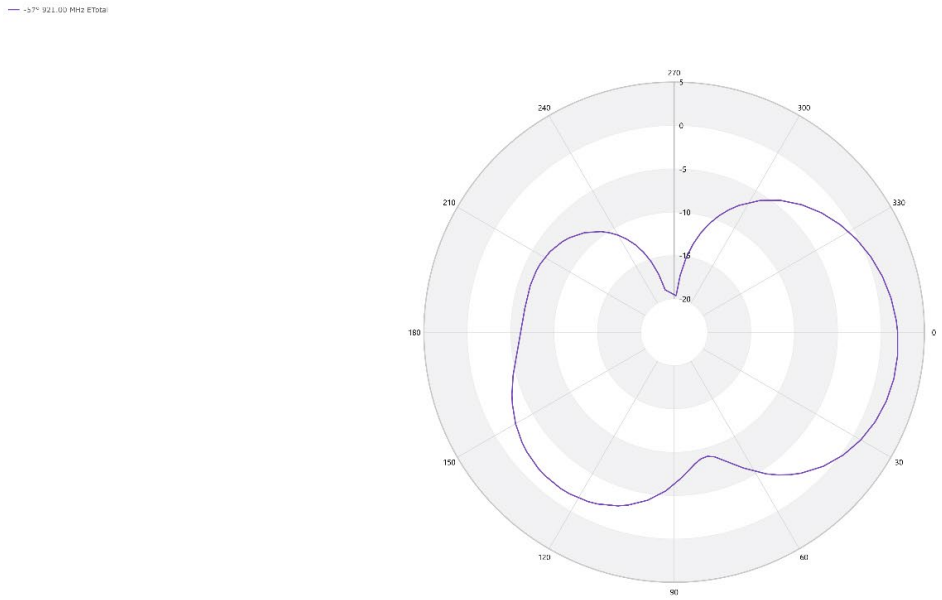


Figure 22 - Azimuth cut, unit 2, 921 MHz

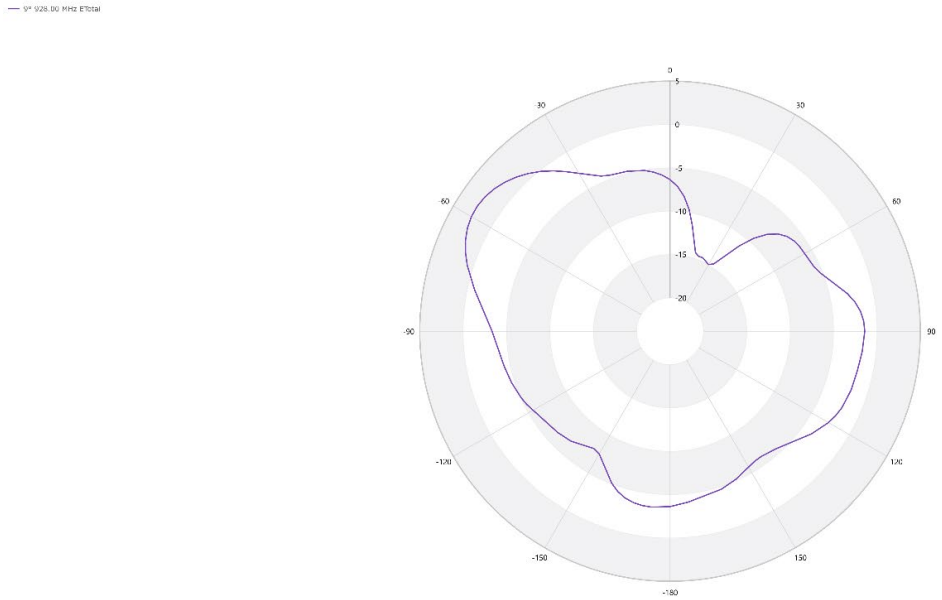


Figure 23 - Elevation cut, unit 2, 928 MHz

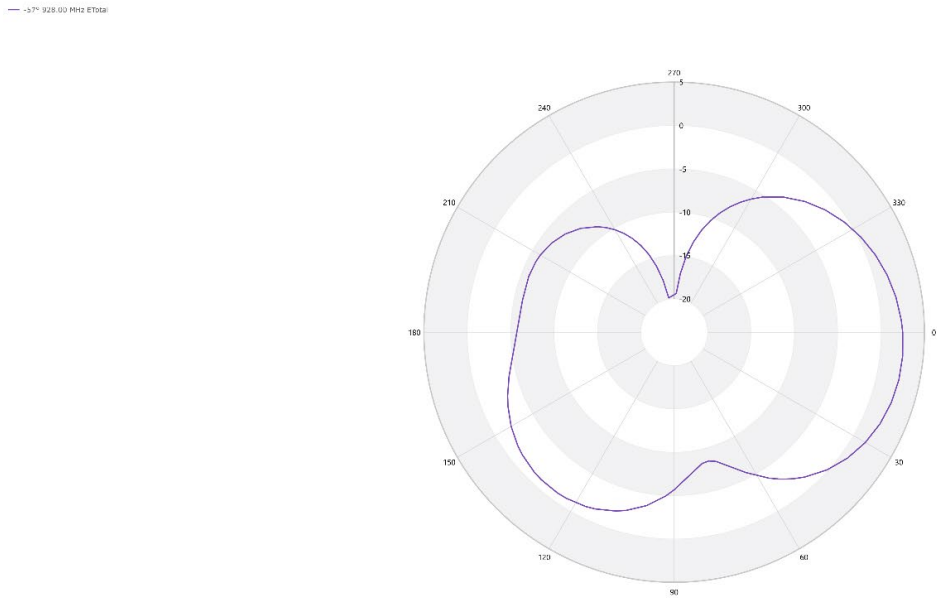


Figure 24 - Azimuth cut, unit 2, 928 MHz

## Unit 3 data

Figure 25 shows the gain of unit 3, figures 26 – 35 show the azimuth, elevation gain plots at each max gain plane.

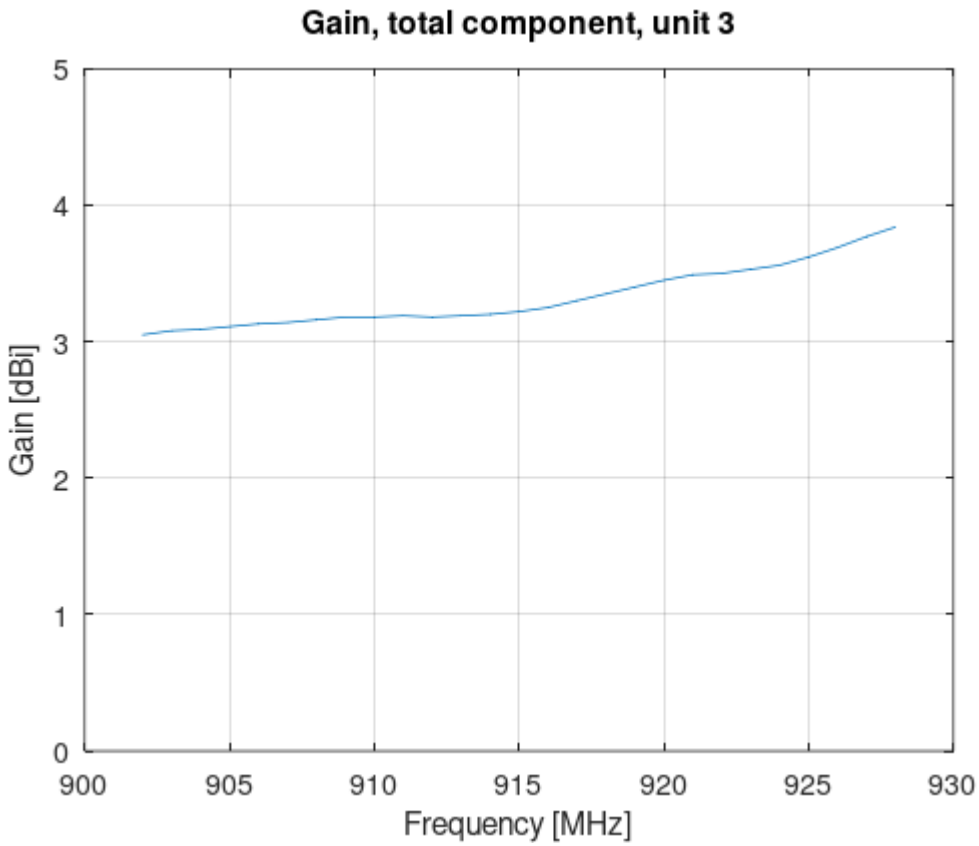


Figure 25 - Unit 3, 900 MHz band gain

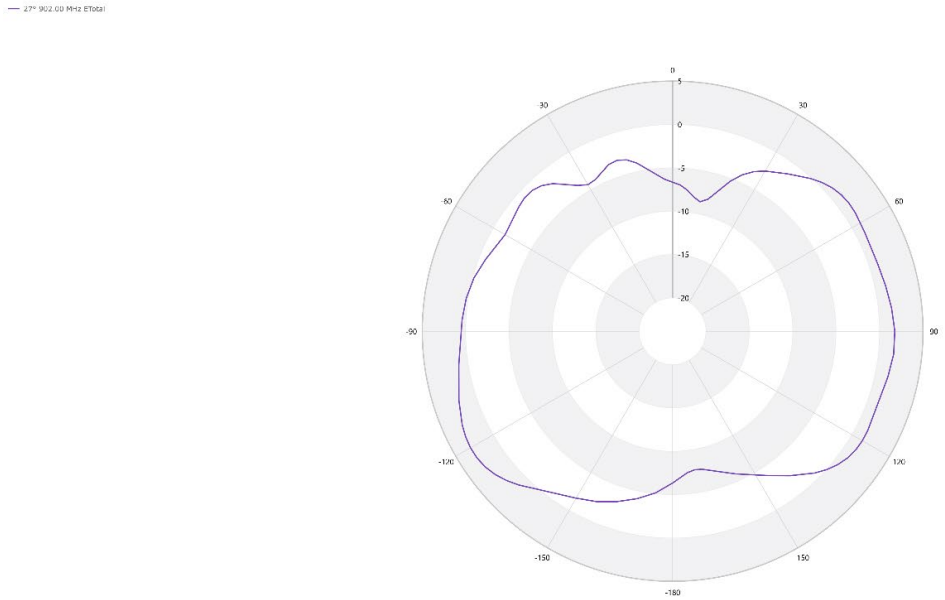


Figure 26 - Elevation cut, unit 3, 902 MHz

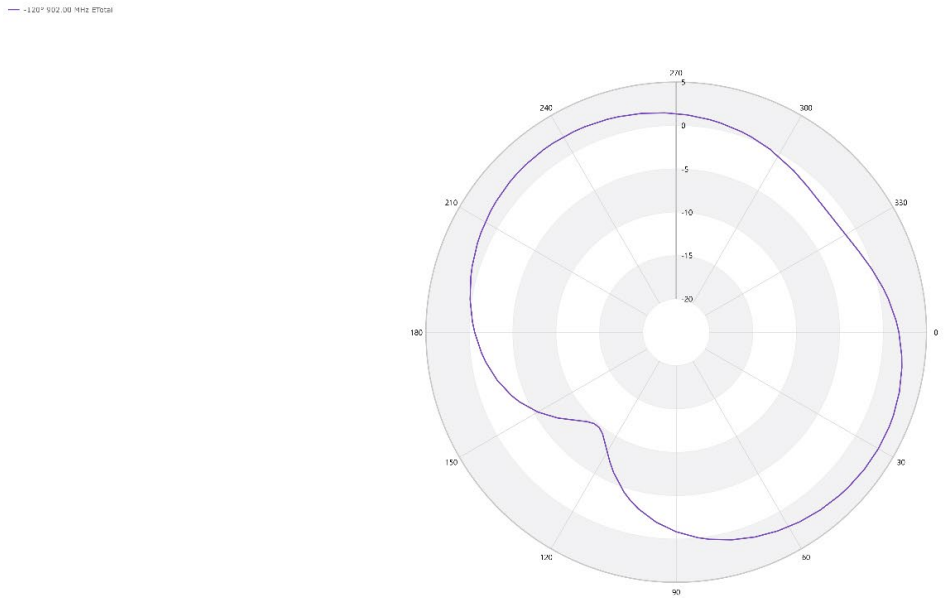


Figure 27 - Azimuth cut, unit 3, 902 MHz

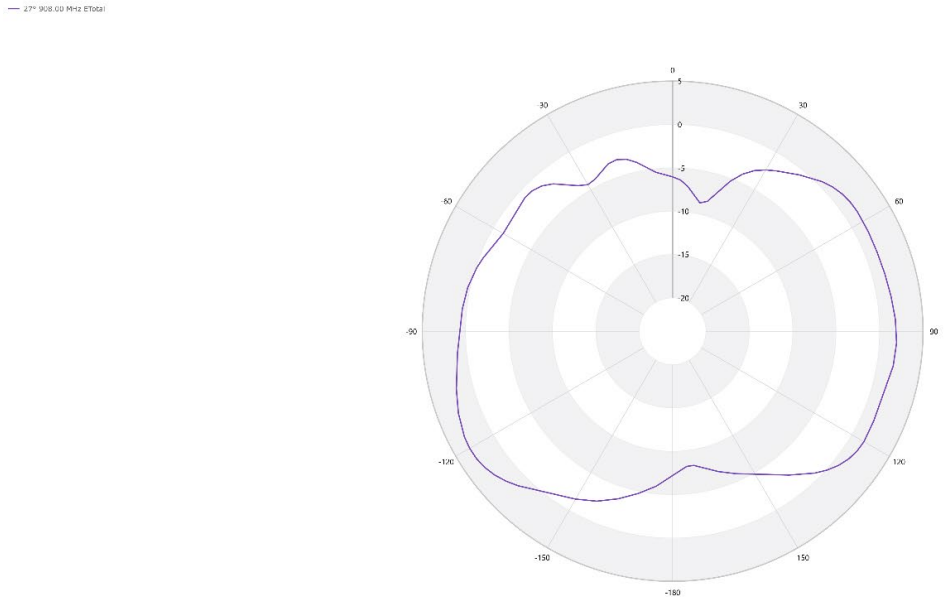


Figure 28 - Elevation cut, unit 3, 908 MHz

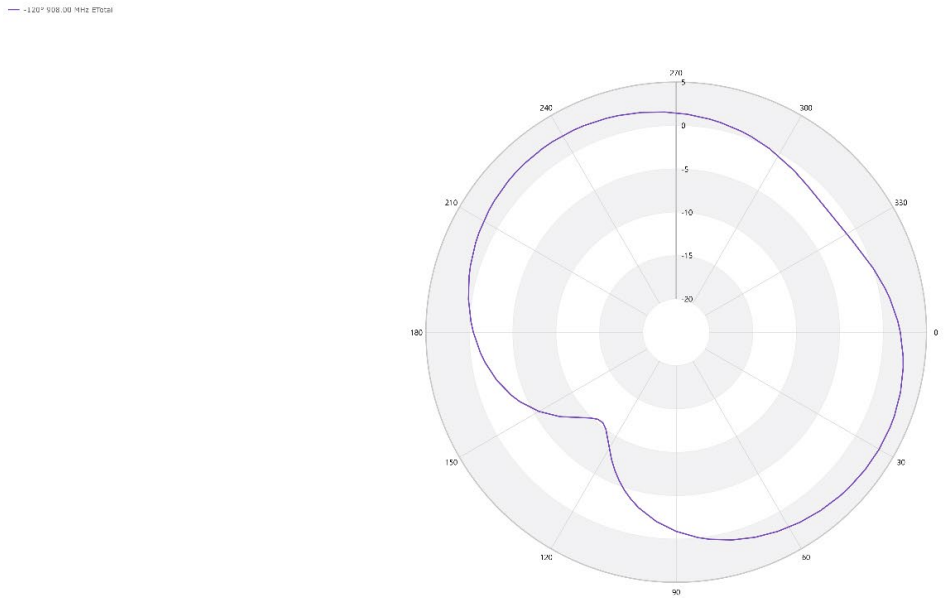


Figure 29 - Azimuth cut, unit 3, 908 MHz

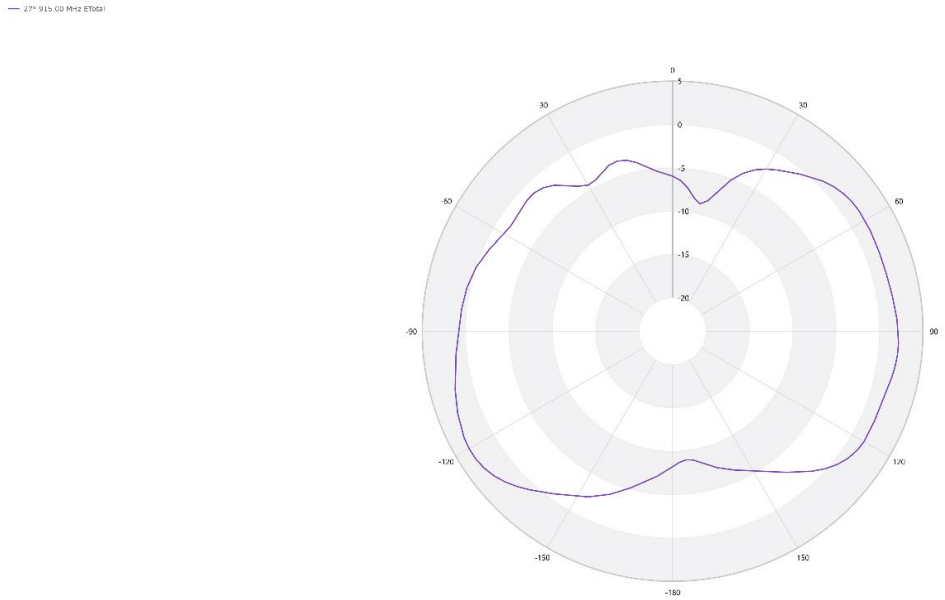


Figure 30 - Elevation cut, unit 3, 915 MHz

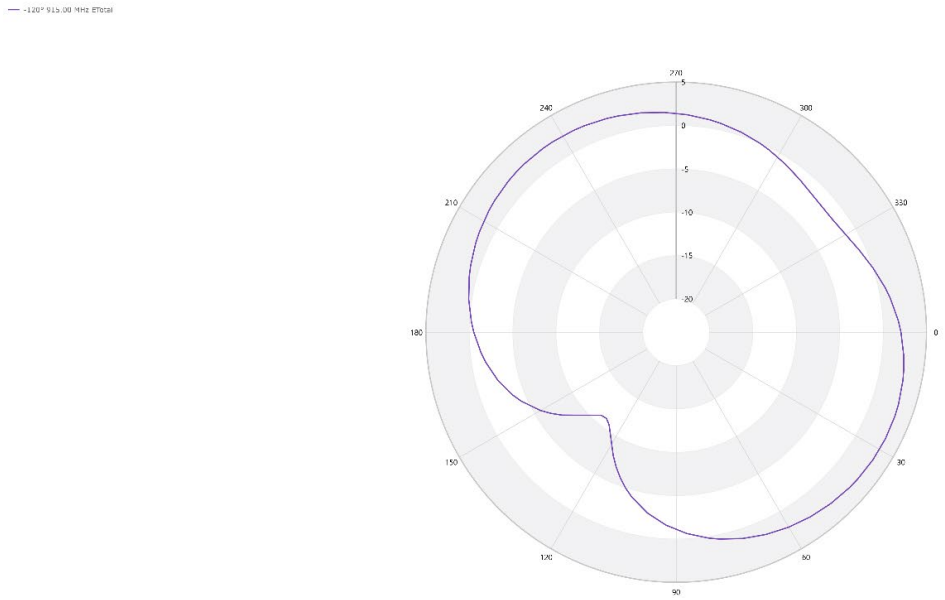


Figure 31 - Azimuth cut, unit 3, 915 MHz

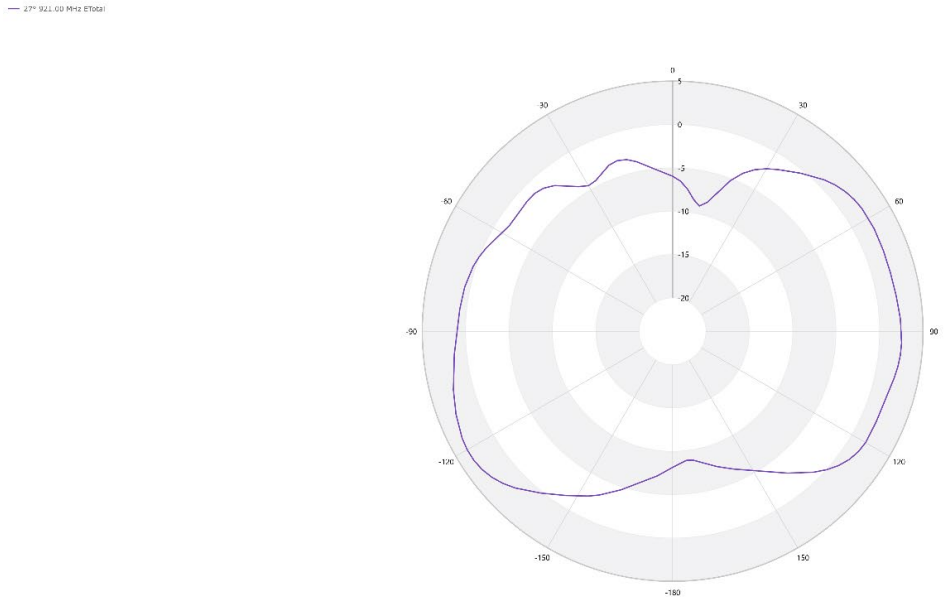


Figure 32 - Elevation cut, unit 3, 921 MHz

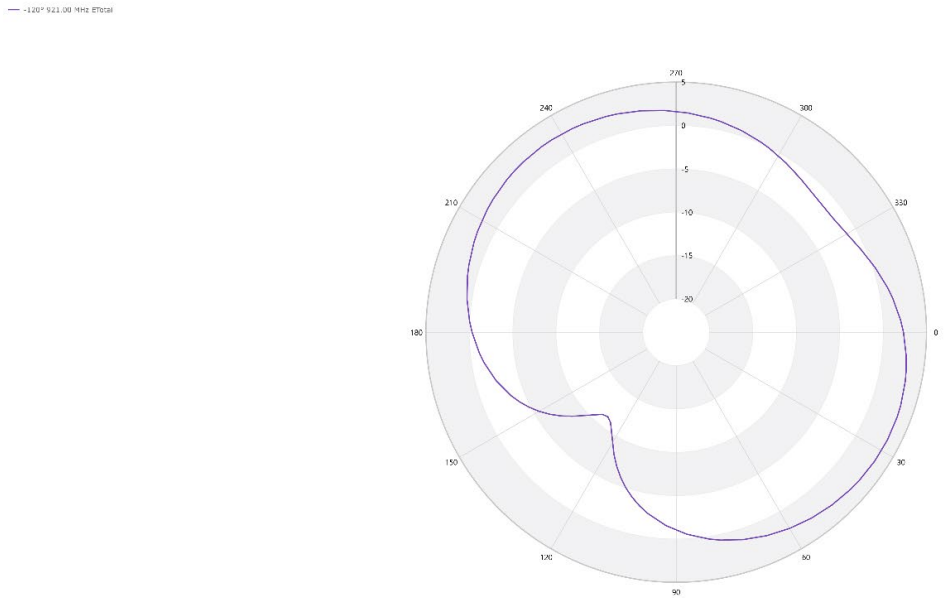


Figure 33 - Azimuth cut, unit 3, 921 MHz

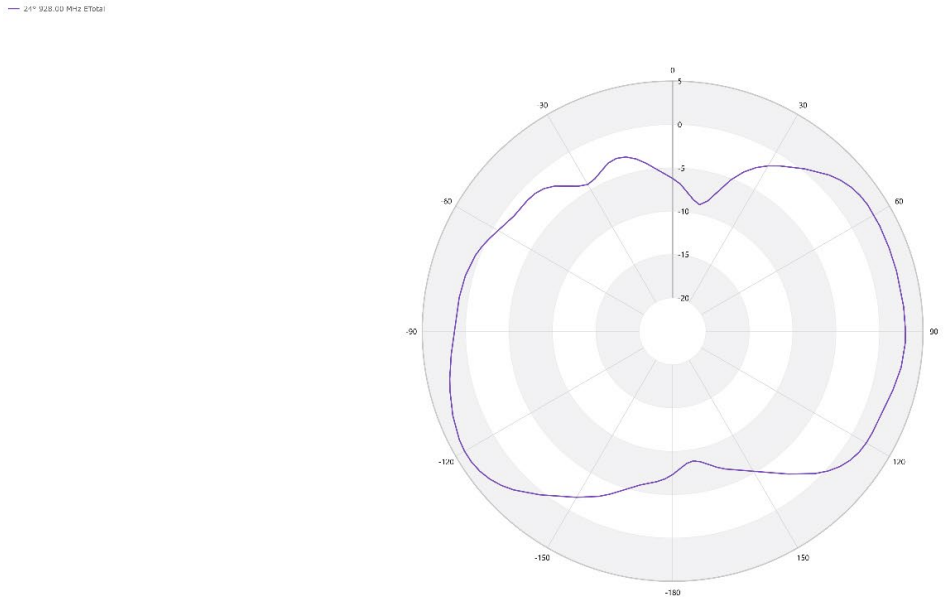


Figure 34 - Elevation cut, unit 3, 928 MHz

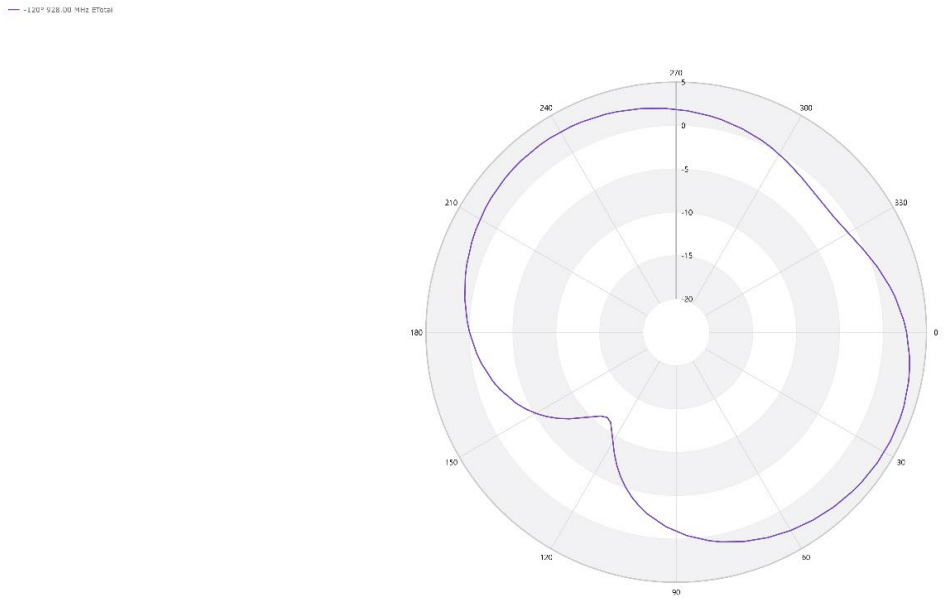


Figure 35 - Azimuth cut, unit 3, 928 MHz

| REVISION HISTORY | | |
|---|---|---|
| **Revision** | **Revision Date** | **Description** |
| A | 10/20/2023 | Initial Release |
| B | | |
| C | | |
| D | | |