NEPTUNE
TECHNOLOGY GROUP

DRAFT

R900 cellular endpoint Wall and Pit Installation and

Maintenance Guide

DRAFT

DRAFT

DRAFT

R900 cellular endpoint Wall and Pit Installation and Maintenance Guide

Copyright

This manual may not be reproduced in whole or part, in any form or by any means, electronic or mechanical, for any purpose, without the express written permission of Neptune Technology Group Inc. All rights to design or inventions disclosed herein, including the right to manufacture, are reserved to Neptune Technology Group Inc.

Trademarks Used in This Manual

ProRead and E-CODER are trademarks of Neptune Technology Group Inc. R900 is a registered trademark of Neptune Technology Group Inc. E-CODER)*i* and CMIU are trademarks of Neptune Technology Group Inc. Other brands or product names are the trademarks or registered trademarks of their respective holders.

FCC Notice

This device complies with Part 15 of the FCC Rules. Operation is subject to the following two conditions:

- This device may not cause harmful interference.
- This device must accept any interference received, including interference that may cause undesired operation.

Note: This equipment has been tested and found to comply with the limits for a Class B digital device, pursuant to Part 15 of the FCC Rules. These limits are designed to provide reasonable protection against harmful interference in a residential installation. This equipment generates, uses, and can radiate radio frequency energy, and if not installed and used in accordance with the instructions, may cause harmful interference to radio communications. However, there is no guarantee that interference will not occur in a particular installation. If this equipment does cause harmful interference to radio or television reception, which can be determined by turning the equipment off and on, the user is encouraged to try to correct the interference by one or more of the following measures:

- Reorient or relocate the receiving antenna.
- Increase the separation between the equipment and receiver.

DRAFT

RF Exposure Information

This equipment complies with the FCC RF radiation requirements for uncontrolled environments. To maintain compliance with these requirements, the antenna and any radiating elements should be installed to ensure that a minimum separation distance of 20 cm is maintained from the general population.

Changes or modifications not expressly approved by the party responsible for compliance could void the users' authority to operate the equipment.

Professional Installation

In accordance with section 15.203 of the FCC rules and regulations, the R900 cellular endpoint must be professionally installed by trained meter installers. Changes or modifications not expressly approved by the party responsible for compliance void the user's authority to operate the equipment.

ISED Statement (Canada)

This device complies with Industry Canada license -exempt RSS standards. Operation is subject to the following two conditions:

- This device may not cause harmful interference.
- This device must accept any interference received, including interference that may cause undesired operation.
- The device has been designed to comply with safety standards for exposure to radio waves (SAR) in accordance to RSS-102.
- The device should be installed and operated with a minimum distance of 20 cm between the equipment and the user's body.

Le présent appareil est conforme aux CNR d'Industrie Canada applicables aux appareils radio exempts de licence. L'exploitation est autorisée aux deux conditions suivantes:

(1) l'appareil ne doit pas produire de brouillage, et

(2) l'appareil doit accepter tout brouillage radioélectrique subi, même si le brouillage est susceptible d'en compromettre le fonctionnement.

Cet artifice a été conçu pour se plier à la sécurité les exigences pour l'exposition aux ondes radioélectriques (SAR) dans conformité avec RSS-102. Cet artifice devrait être installé et fait marcher avec la distance minimale 20 centimètres entre l'équipement et votre corps.

DRAFT

DRAFT

R900 cellular endpoint Wall and Pit Installation and Maintenance Guide
Literature No. IM R900 cellular endpoint 07.20 Part No.

Neptune Technology Group Inc.
1600 Alabama Highway 229
Tallassee, AL 36078
Tel: (800) 633-8754
Fax: (334) 283-7293

Copyright © 2021
Neptune Technology Group Inc.
All Rights Reserved.

Firmware © 2021
Neptune Technology Group Inc.
All Rights Reserved.

Contents

Chapter 1: Product Description *1*

Chapter 2: Specifications *3*

Electrical Specifications 3

Transmitter 3

Encoder Register Interface 3

Environmental 4

Functional 4

Dimensions and Weight 4

Chapter 3: General Installation Guidelines *7*

Tools and Materials 7

Recommended Tools 7

Recommended Materials 8

Safety and Preliminary Checks 8

Verifying and Preparing the Encoder Register 8

Installing a Register (Non Pre-Wired or Potted Only) 9

Chapter 4: Wall Installation *13*

Prior to Installation 13

Storage 13

Unpacking 13

Tools and Materials 14

Site Selection 14

Installing the R900 cellular endpoint 15

Removing the Main Housing 15

Applying the Scotchlok™ Gel Caps 16

Completing and Testing the Installation 18

Testing the Installation 19

DRAFT

Verifying the Meter Reading 21

Chapter 5: Pit Installation 23

Prior to Installation 23

Storage 23

Unpacking 23

Tools and Materials 24

Site Selection 24

R900 cellular endpoint Pit Installation 26

Installing the Antenna 26

Begin the Installation 27

Installing the Scotchlok™ Connectors 29

Connecting the Splice Tube 31

Tying the Cable and Activating the R900 cellular endpoint 32

Testing the Installation 33

Chapter 6: Maintenance and Troubleshooting 35

Six Wheel Encoders 35

Four Wheel Encoders 35

Troubleshooting 35

Contact Information 36

By Phone 36

By Email 36

Appendix A: R900 CELLULAR ENDPOINT Modes 37

Appendix B: CMIU™ Manager 39

R900 cellular endpoint Status 39

Meter Reading 40

Glossary 41

Index 43

DRAFT

Figures

Figure 1 – R900 cellular endpoint – Wall 1
Figure 2 – R900 cellular endpoint – Pit 1
Figure 3 – R900 cellular endpoint Pit – Dimensions Front and Side 4
Figure 4 – R900 cellular endpoint Wall – Dimensions Front and Side 5
Figure 5 – Wiring a Neptune Encoder Register 10
Figure 6 – Color Code for Wires 10
Figure 7 – Cable Threaded Around Strain Relief Posts 11
Figure 8 – Application of the Sealant 11
Figure 9 – Covering the Terminal Screws 12
Figure 10 – R900 cellular endpoint Back Plate 14
Figure 11 – R900 cellular endpoint Wall Kit 14
Figure 12 – Main Housing 15
Figure 13 – R900 cellular endpoint Back Plate 16
Figure 14 – Gel Cap Connectors 16
Figure 15 – Color Code for Wires 17
Figure 16 – Cable in Back of Mounting Adapter 17
Figure 17 – Cable Exit Notch 18
Figure 18 – Securing the Mounting Adapter 18
Figure 19 – Swiping the R900 cellular endpoint 19
Figure 20 – CMIU™ Manager Options 19
Figure 21 – Selecting a R900 cellular endpoint 20
Figure 22 – Connecting the R900 cellular endpoint 20
Figure 23 – Meter Readings 21
Figure 24 – Installing the Seal Wire 21
Figure 25 – R900 cellular endpoint for Pit Installation 23
Figure 26 – Antenna Placement for Low Traffic Areas 25
Figure 27 – Antenna Placement for High Traffic Areas 25

DRAFT

Figure 28 – Inserting the Antenna into the Pit Lid 26
Figure 29 – Locking the Nut on the Antenna 26
Figure 30 – Antenna Installation Complete 26
Figure 31 – Removing the Protective Cap 27
Figure 32 – R900 cellular endpoint Conductor Pin 27
Figure 33 – Aligning the Pin 28
Figure 34 – Locking the Antenna into Place 28
Figure 35 – Swiping the endpoint 28
Figure 36 – Scotchlok™ Connector 29
Figure 37 – R900 cellular endpoint Color Code for Wires 29
Figure 38 – Seating Connector Wires 30
Figure 39 – Crimping Tool 30
Figure 40 – Improper Connections 30
Figure 41 – Three Colored Wires Properly Connected 31
Figure 42 – Splice Tube 31
Figure 43 – Gray Wires in Slots 32
Figure 44 – Attaching the R900 cellular endpoint to the Antenna Shaft 32
Figure 45 – Swiping the R900 cellular endpoint 33
Figure 46 – R900 cellular endpoint Status Screen 39
Figure 47 – Meter Reading 40

DRAFT

Tables

Table 1 – Transmitter Specifications 3
Table 2 – Supported Encoder Maximum Cable Length 3
Table 3 – Environmental Conditions 4
Table 4 – Functional Specifications 4
Table 5 – Recommended Tools 7
Table 6 – Recommended Materials 8
Table 7 – Maximum Cable Lengths 15
Table 8 – Cable Length and Manufacturer 25
Table 9 – Example Reading Values 35
Table 10 – Leak Status Flag Descriptions 37

DRAFT

This page intentionally left blank.

DRAFT

Chapter 1: Product Description

This chapter provides a general description of the Neptune® R900 cellular endpoint for wall and pit applications.

The R900 cellular endpoint is a network endpoint that collects meter reading data from an encoder register. It then transmits the data for collection using LTE-M cellular technology. The collection data is stored and downloaded into the utility billing system for processing.

The R900 cellular endpoint is easily installed in wall or pit applications. It operates on the AT&T and FirstNet LTE-M networks. The R900 cellular endpoint stops RF transmissions when the battery discharges below the normal operating voltage at the end of its lifespan.

Figure 1 – R900 cellular endpoint – Wall

<Image to be added>

Figure 2 – R900 cellular endpoint – Pit w/internal antenna

DRAFT

Figure 3 – R900 cellular endpoint – Pit w/external antenna

DRAFT

This page intentionally left blank.

DRAFT

Chapter 2: Specifications

This chapter covers the specifications for the R900 cellular endpoint.

Electrical Specifications

The power is supplied by a lithium battery.

Transmitter

The following table defines the R900 cellular endpoint transmitter specifications.

Table 1 – Transmitter Specifications

Specification	Description
Transmit Period	Fifteen-minute readings delivered four times per day.
Encoder Reading	15-minute.
Output Power	Meets FCC Part 15.247 and FCC Part 27.
FCC Verification	Part 15.247.

Encoder Register Interface

The following table provides information on the maximum cable lengths required for different registers.

Table 2 – Supported Encoder Maximum Cable Length

Cable Brand	Length
Neptune® ARB® V	300 feet (91 meters). Meets manufacturer's published specifications for wire length between the encoder and the remote receptacle. The length is based on solid three conductor wire, 22 AWG.
Neptune® ProRead™, ProCoder™, MACH 10®, E-CODER®	500 feet (152 meters).
Sensus Protocol registers	200 feet (61 meters).

DRAFT

Environmental

The following table provides the environmental specifications of the R900 cellular endpoint.

Table 3 – Environmental Conditions

Condition	Description
Operating Temperature	–22° to 149°F (–30° to 65°C).
Storage Temperature	–40° to 158°F (–40° to 70°C).
Operating Humidity	0 to 100% condensing.

Functional

The following table provides the functional specifications of the R900 cellular endpoint .

Table 4 – Functional Specifications

Specification	Description
Register Reading	Eight digits.
Endpoint ID	Nine digits.

Dimensions

This section provides the dimensions and weight of the R900 cellular endpoint.

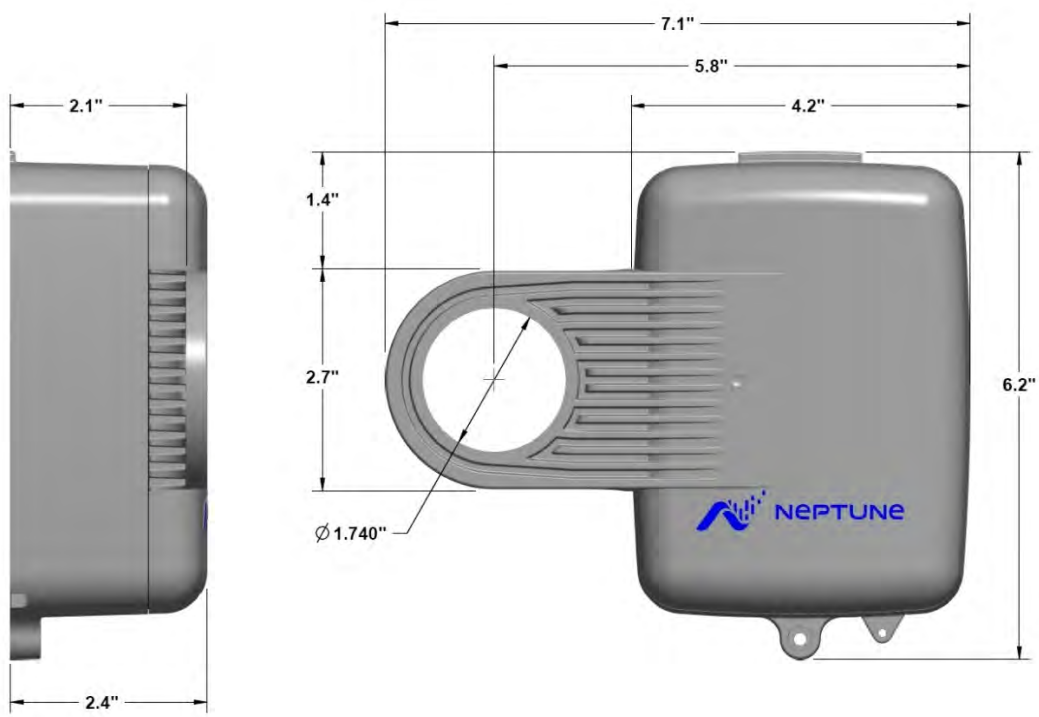

Figure 3 – R900 cellular endpoint pit w/internal antenna– Dimensions Front and Side

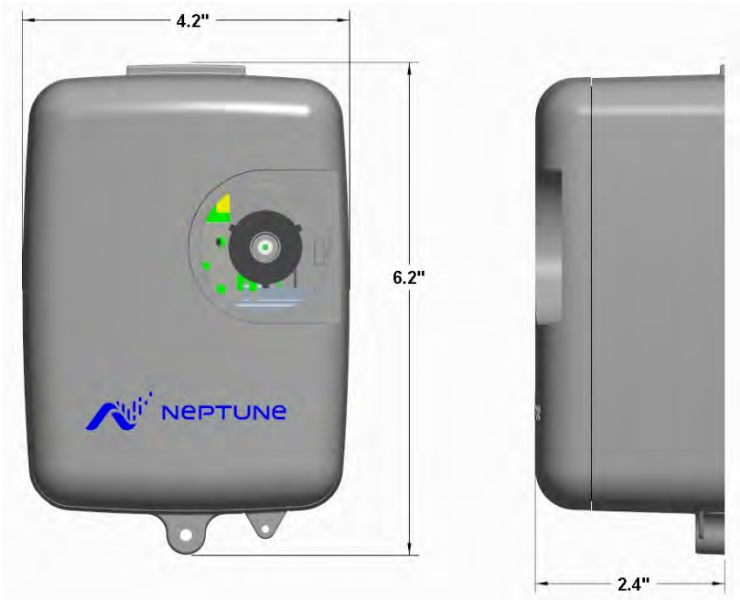

Figure 3 – R900 cellular endpoint Pit w/external antenna – Dimensions Front and Side

DRAFT

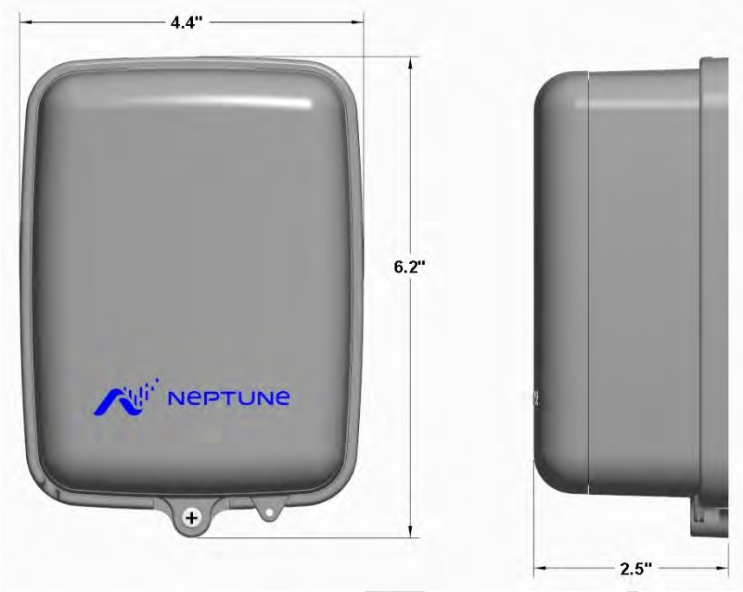

Figure 4 – R900 cellular endpoint Wall – Dimensions Front and Side

DRAFT

This page intentionally left blank.

DRAFT

Chapter 3: General Installation Guidelines

This chapter describes tools, materials, and general installation guidelines for the R900 cellular endpoint.

Tools and Materials

Chapter 3 defines the recommended tools and materials you need to successfully install the R900 cellular endpoint.

Some items may not apply to your specific installation, or the list may not contain all required tools or materials.

Recommended Tools

The following table defines the tools recommended to install the R900 cellular endpoint.

Table 5 – Recommended Tools

Tool	Description	Use
Tool Kit	Contains standard tools including: • Assorted screwdrivers. • Needle-nose pliers. • Wire stripper. • Diagonal cutters. • Electrician's knife. • Hammer. • Crimping tool (part # 5500-158).	Perform various installation procedures.
Magnet	6 lb. force (part # 12287-001).	Activating the R900 cellular

DRAFT

Recommended Materials

The following table defines the materials recommended to install the R900 cellular endpoint .

Table 6 – Recommended Materials

Material	Description	Use
Cable	Solid 3 Conductor #22 AWG (black / green / red) (part # 6431-352).	Connect the R900 cellular endpoint to encoder
Moisture Protection Compound	Novagard® sealant (part# 96018-072).	Cover exposed wires and terminal screws on register and R900 cellular endpoint.
Scotchloks	Part# 8138-125.	Connect wall R900 cellular endpoint or replacement pit R900 cellular endpoint to encoder register.
Site Work Order	Documentation provided by your utility.	Receive and record information

Safety and Preliminary Checks

Observe the following safety and preliminary checks before and during each installation:

- Verify that you are at the location specified on the site work order.
- Verify that the site is safe for you and your equipment.
- Notify the customer of your presence and tell the customer that you need access to the water meter.
- Write the ID numbers of the R900 cellular endpoint you are installing, if the site work order does not include the numbers.
- Verify that the ID numbers match the ID numbers on the R900 cellular endpoint you are installing, if the site work order already includes them.

Verifying and Preparing the Encoder Register

The R900 cellular endpoint is designed for use with the following encoder registers:

- ARB® V.
- ProRead™.
- ProRead™ AutoDetect.
- E-CODER® .
- ProCoder™.
- MACH® 10 .

DRAFT

The R900 cellular endpoint also operates with competitor registers using Sensus UI-1203 protocol which includes:

- Sensus ECRIII
- ICE
- iPerl
- OMNI, and electronic registers
- Hersey/Mueller Translator
- Badger® ADE
- HR-E LCD

Before installing an R900 cellular endpoint, the encoder register must be correctly wired and programmed to work with the R900 cellular endpoint. E-CODER and ProCoder registers do not require programming.

When using a ProRead encoder register, the non-AutoDetect ProRead register must be programmed for three-wire mode.

If connecting the R900 cellular endpoint to a new ProRead encoder register, or if a three-conductor cable is already connected to a ProRead encoder register, ensure that the ProRead register:

- Is programmed for three-wire mode using the field programmer and the,
- Format is set to (NTG) RF MIU Transport Driver Interface format (TDI). You can accomplish this through the ProRead receptacle before removing the receptacle.

Installing a Register (Non Pre-Wired or Potted Only)

Consider the following:

1. Make sure the cable is long enough before wiring the pit encoder register.
2. Use only 22 American Wire Gauge (AWG) cable to make the connection from the encoder register to the R900 cellular endpoint.
3. Remove the terminal screw from the encoder register.
4. Strip off ¾ inch of the jacket from the cable, leaving only the three insulated wires.
5. Take precautions not to nick or cut the insulation on the three wires.

DRAFT

6. Strip off 1/2 inch of insulation from each of the three wires.

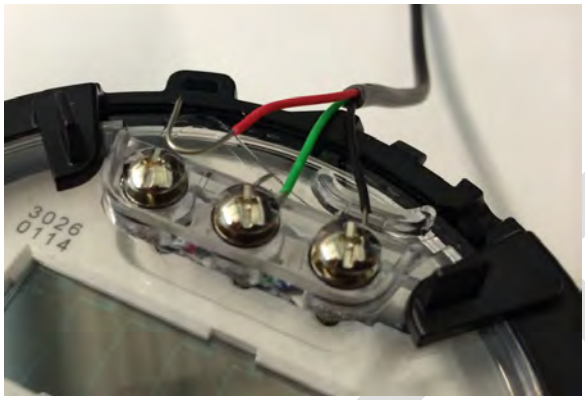

Figure 5 – Wiring a Neptune Encoder Register

7. If required, connect the three conductor wires to the encoder register's terminal per the manufacturer's instructions.

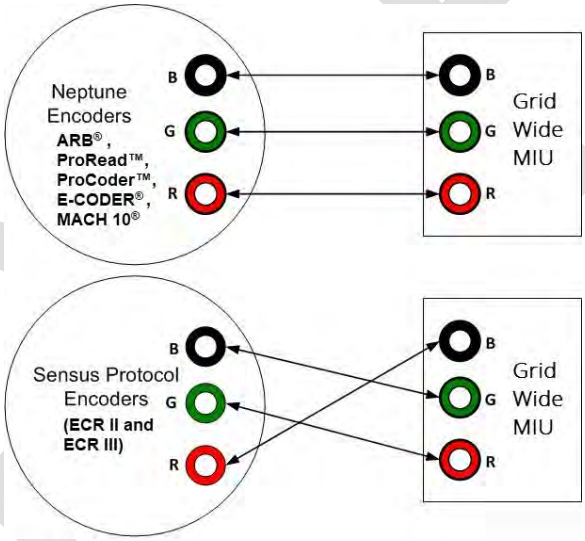

Figure 6 – Color Code for Wires

DRAFT

8. Thread the cable around the strain relief posts of the encoder.

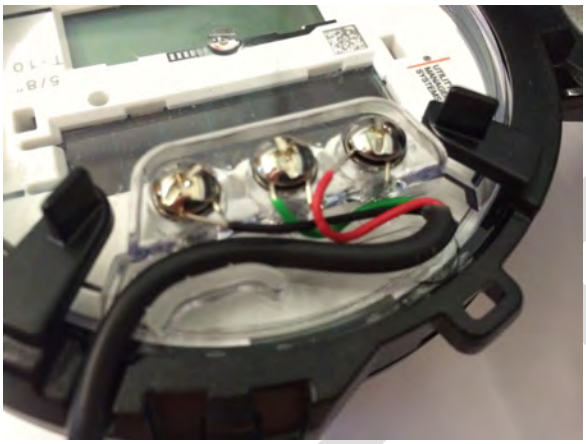

Figure 7 – Cable Threaded Around Strain Relief Posts

9. Apply sealant liberally and ensure that it encapsulates the terminal screws and exposed wires.

Neptune requires Novagard® G661 sealant or Dow® compound 4.

Figure 8 – Application of the Sealant

DRAFT

10. Snap the cover onto the encoder register.

Figure 9 – Covering the Terminal Screws

11. Run the cable to the R900 cellular endpoint and fasten it securely.

Do not exceed maximum cable lengths as defined in "Encoder Register Interface" on page 3. If the encoder register is prewired and potted, use Schotchloks for connecting the register to the R900 cellular endpoint.

DRAFT

Chapter 4: Wall Installation

This chapter describes storage and unpacking instructions, preliminary tests, tools, materials, site selection, and the wall installation procedure for the R900 cellular endpoint.

Prior to Installation

Any existing network registers must be reprogrammed.

The R900 cellular endpoint does not have networking capability

Storage

After receipt, inspect the shipping containers for damage, and inspect the contents for damage prior to storage.

After completing the inspection, store the cartons in a clean, dry environment. The R900 cellular endpoint has an internal battery and storing it for more than one year can affect product life. Be sure to use a first-in, first-out inventory control system. For more information, see "Environmental" on page 4.

Unpacking

Handle the R900 cellular endpoint carefully; however, no additional special handling is required.

After unpacking the R900 cellular endpoint, inspect it for damage. If the R900 cellular endpoint appears to be damaged or proves to be defective upon installation, notify your Neptune sales representative. If one or more items requires reshipment, use the original cardboard box and packing material.

DRAFT

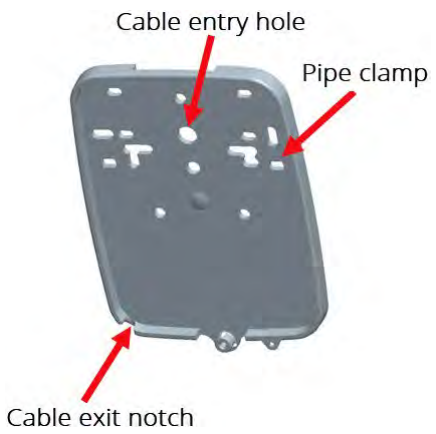

Figure 10 – R900 cellular endpoint Back Plate

Figure 11 – R900 cellular endpoint Wall Kit

Tools and Materials

"Tools and Materials" on page 7 shows the recommended tools and materials you need to successfully install the R900 cellular endpoint.

Some items may not apply to your specific installation, or the list does not contain all required tools or materials.

Site Selection

Always follow your company's safety practices, and installation guidelines when installing a R900 cellular endpoint. Never perform an installation during a lightning storm or under excessively wet conditions.

Installation and operation in moderate temperatures increase reliability and product life. For more information, see "Environmental" on page 4.

Follow these guidelines when selecting a location to install the R900 cellular endpoint.

- Mount the R900 cellular endpoint on the outside of the building.
- Install the R900 cellular endpoint approximately 5 feet above the ground.
- Install the R900 cellular endpoint in a vertical and upright position.
- Mount the R900 cellular endpoint on a flat surface like a wall, but it can also be mounted on a pipe.

DRAFT

- Clear the selected location of all obstructions.
- Avoid installing the R900 cellular endpoint behind metal fences or walls.

The maximum cable length between the encoder register and R900 cellular endpoint depends on the register's manufacturer and model. See the following table for the maximum cable lengths.

Table 7 – Maximum Cable Lengths

Encoder Register	Maximum Cable Lengths
Neptune ARB® V. Meets manufacturer's published specification for wire length to the encoder.	300 feet (91 meters).
Neptune ProRead™, E-CODER®, ProCoder™, MACH 10®.	500 feet (152 meters).
Sensus Protocol registers.	200 feet (61 meters).

Installing the R900 cellular endpoint

This section defines the procedure to install the wall R900 cellular endpoint.

Removing the Main Housing

Complete the following steps to install the wall R900 cellular endpoint.

1. Remove the main housing from the adapter.

Figure 12 – Main Housing

DRAFT

The Hi-Lo fastener for securing the main R900 cellular endpoint housing to the adapter plate is shipped separately.

2. Study "Site Selection" on page 14 and then decide how to install the R900 cellular endpoint.
   - You can insert the cable through any of the entry holes in the back of the mounting adapter. A variety of holes allows for a quick and easy installation.

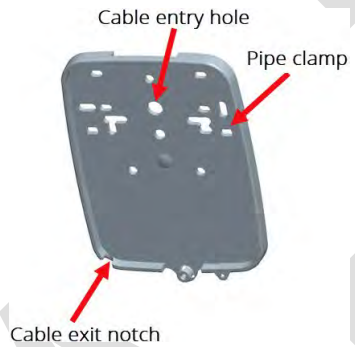

Figure 13 – R900 cellular endpoint Back Plate

   - When the R900 cellular endpoint replaces a receptacle, use the appropriate hole to allow reuse of the receptacle's original mounting holes.
   - When mounting the R900 cellular endpoint to a pipe, use the pipe clamp holes to secure the mounting adapter to a pipe.

Applying the Scotchlok™ Gel Caps

Follow this procedure to apply the Scotchlok™ gel caps.

1. Using Scotchlok gel caps, connect the register to the pigtail from the R900 cellular endpoint.

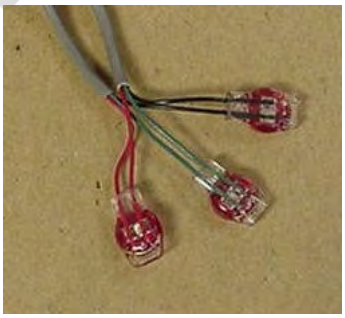

Figure 14 – Gel Cap Connectors

DRAFT

2. Pair the wires according to the color diagram.

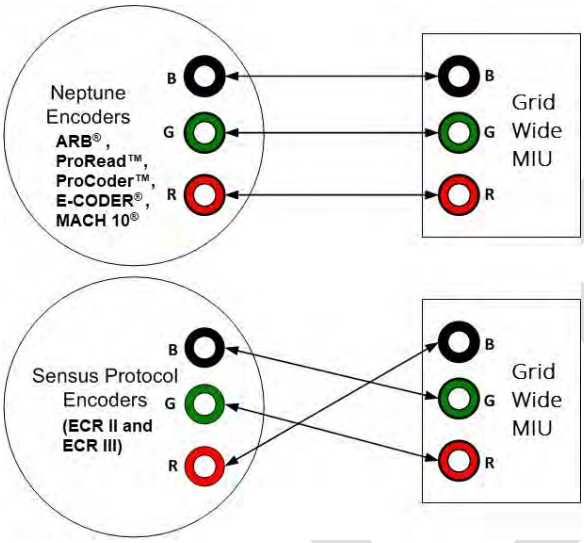

Figure 15 – Color Code for Wires

3. Slide the paired wires into the grooves provided until they seat into the back of the gel cap.
4. Squeeze the gel cap firmly using the appropriate crimping tool to ensure a good connection.
5. Repeat this process until all connections are complete.
6. Store excess wire and Scotchloks in the hollow cavity in the back of the R900 cellular endpoint using the strain relief guides.

Figure 16 – Cable in Back of Mounting Adapter

DRAFT

7. Continue to guide the remaining wire through the cable exit notch at the bottom right side of the R900 cellular endpoint.

Figure 17 – Cable Exit Notch

Completing and Testing the Installation

Follow this procedure to complete and test the installation.

1. Slide the tongue on the top of the R900 cellular endpoint into the groove on the top of the mounting adapter.
2. Secure the R900 cellular endpoint to the mounting adapter using the set screw.

Figure 18 – Securing the Mounting Adapter

DRAFT

3. Position the magnet against the left side of the R900 cellular endpoint directly in line with the Neptune logo.
4. Move the magnet up and over the top left corner of the R900 cellular endpoint.

Figure 19 – Swiping the R900 cellular endpoint

5. Install a seal wire or seal clip through the seal hole at the bottom of the R900 cellular endpoint main housing.

Figure 24 – Installing the Seal Wire

6. Verify that the requirements of the site work order have been met and that you have recorded all information.
7. Clean up the installation site before leaving.

DRAFT

Testing the Installation

The Neptune 360 Field Manager App can be used to verify cellular connectivity and meter reading to ensure that the R900 cellular endpoint is installed correctly.

< Image Placeholder>
Figure 20 – CMIU™ Manager Options

To test the installation, complete the following steps. First, be sure to swipe the R900 Cellular Endpoint with a magnet. For more information, see "Completing and Testing the Installation" on the previous page.

8. Open the CMIU Manager section in the Field Manager app on an Android or iOS device
9. Enter and search the endpoint ID. This can be done either by manually entering the ID number or scanning the endpoint ID barcode using the SCAN BARCODE tool in the app.

< Image Placeholder>
Figure 21 – Entering the R900 cellular endpoint ID

10. To scan the barcode, hold the camera of the Android or iOS device over the R900 cellular endpoint ID label and click 'Search'

< Image Placeholder>
Figure 22 – Scanning the R900 cellular endpoint ID

11. Verify the LTE connection is successful. If the LTE connection has not occurred or if the signal strength is poor, the user will see the following disclaimer message, "To improve the signal, Neptune recommends moving the CMIU to another location or utilizing a pit antenna (pit units only)". The table below describes the signal quality.

Table 8 – LTE Signal Strength

4G LTE	RSRP	RSRQ
Signal Quality	**(dBm)**	**(dB)**
Excellent	> -84	> -5
Good	-85 to -102	-9 to -5
Fair	-103 to -111	-12 to -9
Poor	< -111	< -12

DRAFT

If the signal strength displayed is Excellent or Good, the cellular coverage is adequate. If the signal strength is Fair, or Poor, cellular connectivity may be impacted.

12. Verify that the meter reading is valid. If the meter reading is:
    - Valid, continue with the next step.
    - Invalid, verify all endpoint to register connections and test the installation again.

< Image Placeholder>

Figure 23 – Meter Readings

DRAFT

DRAFT

DRAFT

This page intentionally left blank.

DRAFT

Chapter 5: Pit Installation

This chapter describes storage and unpacking instructions, preliminary tests, tools, materials, site selection, and pit installation of the R900 cellular endpoint.

Prior to Installation

Follow the procedures in this section before you install the R900 cellular endpoint.

Storage

After receiving the shipment, inspect the containers for damage and inspect the contents for damage prior to storage.

After completing the inspection, store the cartons in a clean, dry environment. Keep in mind that the R900 cellular endpoint has an internal battery. Storage for more than one year may affect product life. Be sure to use a first-in, first-out inventory control system. For more information, see "Environmental" on page 4.

Unpacking

Handle the R900 cellular endpoint carefully; however, no additional special handling is required.

After unpacking the R900 cellular endpoint, inspect it for damage. If the R900 cellular endpoint appears to be damaged or proves to be defective upon installation, notify your Neptune sales representative. If one or more items requires reshipment, use the original cardboard box and packing material.

Figure 25 – R900 cellular endpoint - Pit w/Internal Antenna

< Image Placeholder>

Figure 26 – R900 cellular endpoint - Pit w/External Antenna

DRAFT

Tools and Materials

See Chapter 3, General Installation Guidelines, for the recommended tools and materials you need to successfully install the R900 cellular endpoint.

Some items may not apply to your specific installation, or the list may not contain all required tools or materials.

Site Selection

Installation and operation in moderate temperatures increase reliability and product life. For more information, see "Environmental" on page 4.

Always follow your company's safety practices and installation guidelines when installing an R900 cellular endpoint. Never perform an installation during a lightning storm or under excessively wet conditions.

Follow these guidelines when selecting a location to install the R900 cellular endpoint.

- Select a location where there is no chance that another object can be set over the pit lid.
- Avoid installing the R900 cellular endpoint behind metal fences or walls.
- Consider the following clearances for the R900 cellular endpoint – Pit w/internal antenna

Table 10 – Required clearances for the R900 cellular endpoint – Pit w/internal antenna

Requirement	Minimum	Recommended	Notes
A. Vertical clearance from pit lid to meter/register	2-1/2"	3"	
B. Antenna hole distance from pit lid edge	2-3/16"	3-3/16"	Recommended distance (3-3/16") is needed to support the external cellular antenna if desired in the future
C. Pit Lid Length	11”	13”	For smaller pits, utilize the R900 cellular endpoint w/external antenna
D. Pit Lid Width	9”	11”	For smaller pits, utilize the R900 cellular endpoint w/external antenna
Pit Lid Material	Plastic Only		Lid material must be non-metal & non-metallic material. Pits with metal pit lids require the R900 cellular endpoint w/external antenna

DRAFT

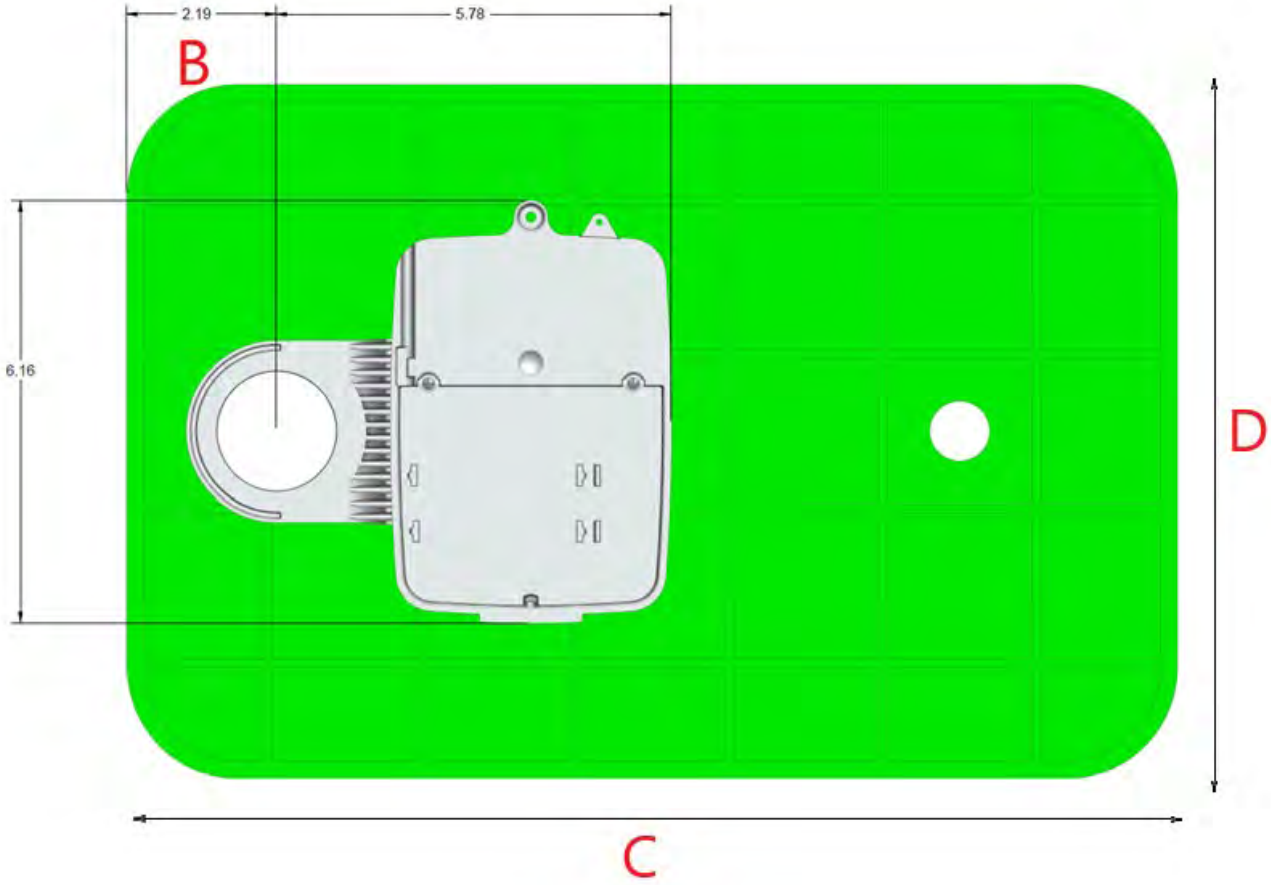

Figure 27 – R900 cellular endpoint - Pit w/Internal Antenna Clearances

- For Pit endpoints with the internal antenna, the meter pit must use a plastic polymer lid. Pits with metal lids require the pit endpoint with external antenna.
- Make sure the pit location gives adequate room for installing both the R900 cellular endpoint and the flange or TTL pit antenna (if used).
- Install the flange or pit antenna above the lid in low traffic areas, as illustrated below, for maximum performance.

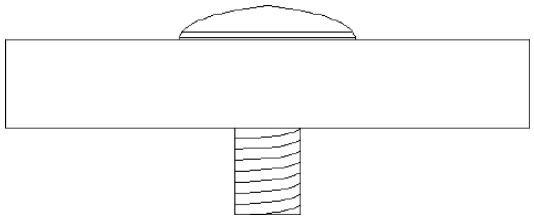

Figure 26 –Flange or Antenna Placement for Low Traffic Areas

- When installing in a high traffic area, Neptune recommends that the dome of the flange or pit antenna be recessed in the pit lid as shown in the following figure.
- Recessing the installation reduces the range of the pit antenna.

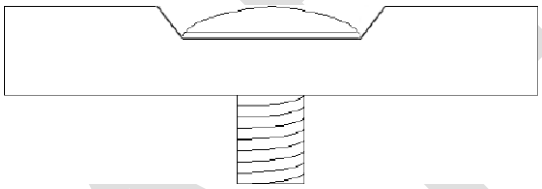

Figure 27 – Flange or Antenna Placement for High Traffic Areas

Although the R900 cellular endpoint has a cable already attached (2 feet or 6 feet), some installations can require additional cable. In these cases, the maximum cable length between the encoder register and the R900 cellular endpoint depends on the register's manufacturer and model. For more information, see "Encoder Register Interface" on page 3.

Table 8 – Cable Length and Manufacturer

Encoder Register	Maximum Cable Length
Neptune ARB® V Meets manufacturer's published specification for wire length between encoder and remote receptacle.	300 feet (91 meters).
Neptune ProRead™, E-CODER®, ProCoder™, MACH 10®.	500 feet (152 meters).
Sensus Protocol Register.	200 feet (61 meters).

DRAFT

R900 cellular endpoint Pit Installation

The following section describes how to install a single R900 cellular endpoint in a pit location. The Pit endpoint can be purchased in two formfactors:

- R900 cellular endpoint pit w/internal antenna
- R900 cellular endpoint pit w/external antenna

Be sure to select the appropriate version based on the recommendations in “Site Selection” on page 24.

Installing the R900 cellular endpoint - Pit w/internal antenna

Follow this procedure to install the pit endpoint

1. Remove the pit lid.
2. Connect the endpoint to the meter/register using the appropriate 3-wire connection type (see “installing the Scotchlok™ connectors” on page # for more details on splicing)
3. Using a magnet, swipe clockwise around the top left corner of the endpoint, starting at the middle of the endpoint’s longer side and ending at the middle of the short side.

4. To test the connection to the meter/register and the cellular connection, follow the steps in the section “Testing the Installation” on page 20.
5. Insert the flange tube through the 1-3/4inch hole in the meter pit lid.

DRAFT

6. Slide the endpoint housing onto flange tube with the face of the endpoint housing toward the pit lid until the face of the endpoint is touching the underside of the lid.

7. Thread the locking nut onto the flange tube, with the unthreaded end toward the lid until it is loosely touching the endpoint housing.
8. Rotate the endpoint horizontally as needed to fit into the meter pit and finish tightening the locking not to secure the endpoint in place.

9. Put the meter pit lid back in place ensuring a snug fit with the meter pit.

Pit endpoint w/External TTL Antenna Installation

Complete these steps to install the endpoint w/external antenna in a pit.

1. Insert the antenna cable and housing through the 1-3/4 inch hole in the meter pit lid.

Figure 28 – Inserting the Antenna into the Pit Lid

2. Thread the locking nut onto the antenna, with the unthreaded end toward the lid.

Figure 29 – Locking the Nut on the Antenna

Figure 30 – Antenna Installation Complete

3. Remove the protective cap from the antenna connector by pushing down and twisting the protective cap counterclockwise.

Figure 31 – Removing the Protective Cap

Make sure there is a red, O-ring gasket in the connector and there is Novagard® gel in the connector cavity.

4. Remove the protective cap from the antenna connection on the endpoint.
5. Connect the antenna to the endpoint ensuring that the center conductor pin inside the connector is lined up with the hole in the center of the connector on the endpoint.

DRAFT

Figure 32 – R900 cellular endpoint Conductor Pin

6. When the pin is properly aligned, push the antenna connection down fully onto the connection of the endpoint, so that the latch plate is engaged on all three posts.

Figure 33 – Aligning the Pin

7. Turn the antenna clockwise until it locks into place.

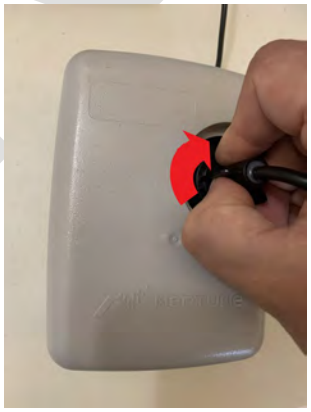

Figure 34 – Locking the Antenna into Place

8. Connect the endpoint to the meter/register using the appropriate 3-wire connection type (see “Installing scotchlock connectors” section for more details on splicing)

DRAFT

9. Once the register and antenna are connected the R900 cellular endpoint can be activated. Using a magnet, swipe clockwise around the top left corner of the endpoint, starting halfway down the long side of the endpoint and finishing at the middle of the shorter side to activate the endpoint.

Figure 35 – Swiping the R900 cellular endpoint

DRAFT

Installing the Scotchlok™ Connectors

Complete the following steps to install the Scotchlok™ connectors.

Make sure you complete the pit installation procedures before you install the Scotchloks.

1. Use the 3M Scotchlok-type connector to connect the R900 cellular endpoint wires to the encoder wires.
2. Hold the Scotchlok's connector between the index finger and thumb with the red cap facing down.

Figure 36 – Scotchlok™ Connector

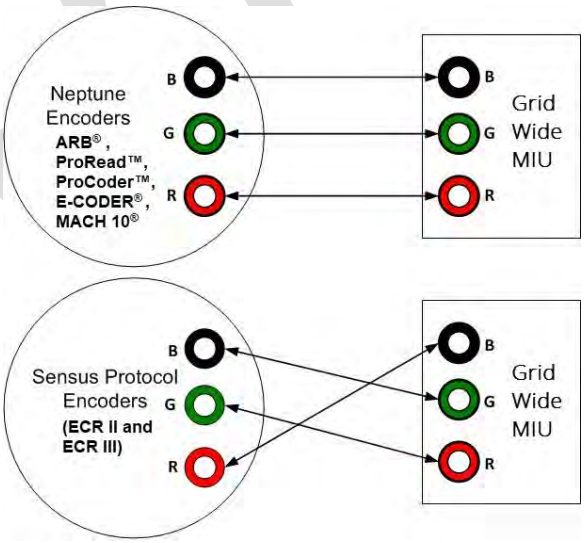

Figure 37 – R900 cellular endpoint Color Code for Wires

DRAFT

3. Take a non-stripped black wire from the pigtail and a non-stripped black wire from the R900 cellular endpoint and insert the wires into the Scotchlok connector until fully seated.

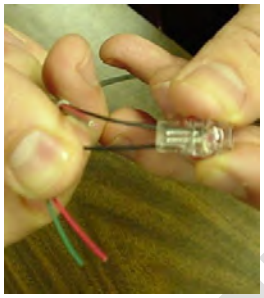

Figure 38 – Seating Connector Wires

4. Do not strip colored insulation from the wires, or strip and twist bare wires prior to inserting into a connector. Insert the insulated colored wires directly into the Scotchlok connector.
5. Place the connector (red cap side down) between the jaws of the crimping tool.

Figure 39 – Crimping Tool

6. Check to ensure the wires are still fully seated before crimping the connector. The following image illustrates improper connections due to wires not being fully seated.

Figure 40 – Improper Connections

DRAFT

7. Squeeze the connector firmly with the proper crimping tool until you hear a pop and gel leaks out the end of the connector.
8. Repeat steps two through six for each color wire.
9. After connecting all three color wires, read the encoder register to ensure proper connections, and the R900 cellular endpoint is functioning properly.

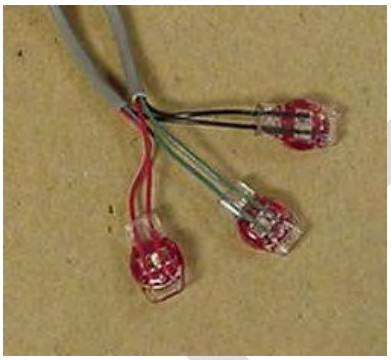

Figure 41 – Three Colored Wires Properly Connected

Connecting the Splice Tube

To finish installing the Scotchloks, complete the following steps to install the connector king splice tube.

1. Take all three connected Scotchloks and push them into the splice tube until fully encapsulated by the silicone grease.

Figure 42 – Splice Tube

2. Separate each gray wire and place them in the slots on each side.

DRAFT

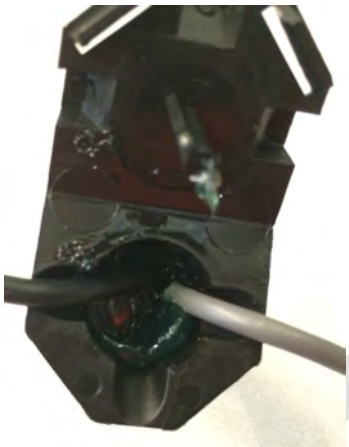

Figure 43 – Gray Wires in Slots

3. Snap the cover closed to finish the installation.

Securing the Endpoint to the Antenna Tube

Follow this procedure in deep pits or vaults to secure the R900 cellular endpoint to the Antenna Tube

1. Place the R900 cellular endpoint in the pit location:
   - In a shallow pit application, you can place the R900 cellular endpoint beside the meter.
   - In deep pit applications, use a cable tie to suspend the R900 cellular endpoint from the antenna shaft.
   - Do not lodge the R900 cellular endpoint between the meter box and any components inside the box.

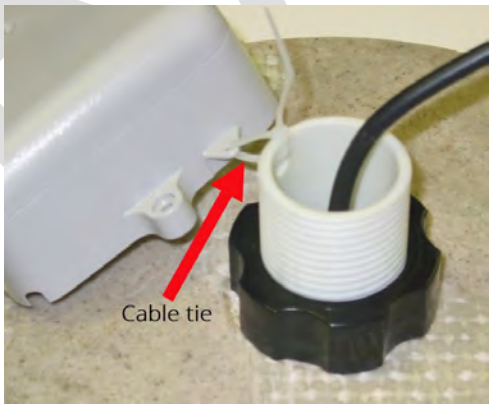

Figure 44 – Attaching the R900 cellular endpoint to the Antenna Shaft

2. Place the R900 cellular endpoint in such a way that it does not lodge itself when the pit lid is removed.

Make sure you activate the endpoint before completing the installation.

DRAFT

Testing the Installation

To test the installation, follow the steps in "Testing the Installation" on page 20.

DRAFT

This page intentionally left blank.

DRAFT

Chapter 6: Maintenance and Troubleshooting

This chapter takes you through maintenance and troubleshooting procedures for the R900 cellular endpoint.

Six Wheel Encoders

If the odometer reads 123456, the CMIU Manager should show 1 2 3 4 5 5 0 0.

The sixth digit displayed is a five, if the last digit on the odometer is five through nine. The sixth digit is a zero, if the last digit on the odometer is zero through four.
The R900 cellular endpoint adds two zeros on the end to provide an eight-digit reading to the host software.

Four Wheel Encoders

If the odometer reads 1234, the CMIU Manager shows 1 2 3 4 0 0 0 0.

The R900 cellular endpoint adds four zeros on the end to provide an eight-digit reading to the host software.

Troubleshooting

This section provides examples of possible reading values and what they indicate. Refer to Appendix B: Field Manager for troubleshooting cellular connectivity issues.

Table 9 – Example Reading Values

Reading Value	Definition	Troubleshooting
::::::::	Failure to retrieve reading	• Usually indicates a cut wire. Check the connection between the register and R900 cellular endpoint. • If using a non-autodetect ProRead™ register, verify that it is programmed for three-wire mode.
????????	Indicates an ambiguous, bad read, replaces --------and HHHHHHHH	N/A

DRAFT

Contact Information

Within North America, Neptune Customer Support is available Monday through Friday, 7:00 A.M. to 5:00 P.M. Central Time, by telephone or email.

By Phone

To contact Neptune Customer Support by phone, complete the following steps.

1. Call (800) 647-4832.
2. Select one of the following options:
   - 1 if you have a Technical Support Personal Identification Number (PIN).
   - 2 if you do not have a Technical Support PIN.
3. Enter the six-digit PIN and press #.
4. Select one of the following options:
   - 2 for Technical Support.
   - 3 for maintenance contracts or renewals.
   - 4 for Return Material Authorization (RMA) for Canadian Accounts.

   You are directed to the appropriate team of Customer Support Specialists. The specialists are dedicated to you until the issue is resolved to your satisfaction. When you call, be prepared to give the following information:

   - Your name and utility or company name.
   - A description of what occurred and what you were doing at the time.
   - A description of any actions taken to correct the issue.

By Email

To contact Neptune Support by email, send your message to support@neptunetg.com.

DRAFT

Appendix A: Endpoint Modes

There is a single mode of operation for the R900 cellular endpoint, which provides 15-minute register interrogations with readings delivered every six hours.

Table 10 – Leak Status Flag Descriptions

Leak Status Flag (Resets After 35 Days)	
Based on total amount of 15-minute periods recorded in the previous 24-hour period.	
Leak icon off	Eighth digit incremented less than 50 of the 96 days of 15-minute intervals.
Flashing leak icon	Eighth digit incremented in 50-95 of the 96 days of 15-minute intervals.
Solid leak icon	Eighth digit incremented in all of the 96 days 15-minute intervals.
Consecutive Days with Zero Consumption Flag (Resets After 35 Days)	
Number of days the “leak status” was at a minimum value.	

DRAFT

This page intentionally left blank.

DRAFT

Appendix B: Field Manager

Field Manager is an Android and iOS application that can communicate with a cellular endpoint during the installation, troubleshooting, and maintenance of the MIU. The MIU Manager provides the following functionality checks on the MIU:

- LTE Connection Status

The Manager is compatible with iOS version X.X and Android Y using either an iPhone or iPad.

LTE Connection Status

The LTE Connection Status screen provides a snapshot of the current configuration of the R900 Cellular Endpoint that is being searched. This information provided is below:

- Endpoint Status (4 possible states based on signal quality: Excellent, Good, Fair, Poor)
- Signal quality (RSRP and RSRQ)
- Last meter reading
- Last call in time

Additionally, users can open a collapsible section and review additional information for their R900 cellular endpoint as listed below**:)**

- Mode
- Reporting Interval
- Recording Interval
- Reading Interval
- CMIU Clock
- Last RSRP
- Last RSRQ
- Firmware Rev.
- Bootloader Rev.
- Config Rev.
- Register ID of the connected register

Error Messaging

Given a user is attempting to search for a R900 cellular endpoint, but cannot return their details, there are two possible error scenarios that can occur.

1. If the user's mobile device does not have service at the time of searching, the user will see a message stating, " No network connection. Try again later."
2. If the user is searching for an endpoint and nothing can be returned, the user will see a message stating, "Cannot find MIU. Please try swiping again or moving to a new location to try connection again"

< Image Placeholder>

Figure 46 – R900 cellular endpoint Status

DRAFT

Screen

DRAFT

DRAFT

Glossary

A

antenna (pit)

Endpoint antenna used for pit installations.

AWG

American Wire Gauge.

C

CMIU™

Cellular Meter Interface Unit.

F

FCC

Federal Communications Commission.

L

Liquid Crystal Display (LCD)

Component where the meter-reading and value-added icons are displayed.

M

MIU

Meter Interface Unit.

DRAFT

R

register read time

The default time is 15 minutes for all registers. Custom time is not available.

S

seal pin

Small, black plastic nail used to secure the E-CODER®)R900*i* to the meter.

serial number

Unique identification number given to each endpoint at the factory. The default value is the last programmed, plus one. Custom serial numbers are not available.

T

TDI

Transport Driver Interface format.

transmission time

The time between endpoint transmissions.

DRAFT

A

American Wire Gauge 9

AWG 9

B

backflow 37

battery 3, 13, 23

C

cable 3, 8, 15

- 22 AWG 3, 9
- maximum length 3
- three-conductor 9

CMIU™ 15

- installing 15
- manager 19
- testing 19

conductor wire 10

customer support 36

D

dimensions 4

Dow® Corning 11

E

E-CODER®)R900*i* 8

encoders

- four wheel 35
- six wheel 35

I

iOS 19

M

magnet 7, 19

maintenance 23

mounting adapter 18

N

Novagard® sealant 11

O

operating humidity 4

P

prewired 12

procedures

- maintenance 35
- troubleshooting 35

ProRead™ 3

R

read E-CODER®)R900*i* 13

DRAFT

DRAFT

receptacle 16
register
install 9
potted only 9

S

Scotchlok™ 8, 29
seal
clip 21
hole 21
sealant 11
storage 13
strain relief posts 11

T

TDI 9
temperature
operating 4
storage 4, 13
testing the installation 23
tool kit 7
tools 13
Transport Driver Interface format 9

W

weight 4

DRAFT

DRAFT