BGM220S Wireless Gecko Bluetooth® Module Data Sheet

The BGM220S is a module designed and built to meet the performance, security, and reliability requirements of battery-powered IoT products running on Bluetooth networks.

Based on the EFR32BG22 SoC, the BGM220S enables Bluetooth® Low Energy connectivity while delivering best-in-class RF range and performance, future-proof capability for feature and OTA firmware updates, enhanced security features, and low energy consumption.

BGM220S modules are a full solution that comes with fully-upgradeable, robust software stacks, world-wide regulatory certifications, advanced development and debugging tools, and support that will minimize and simplify the engineering and development of your end-products helping to accelerate their time-to-market.

The BGM220S is intended for a broad range of applications, including:

- Asset Tags and Beacons
- Portable Medical
- Sports, Fitness, and Wellness devices
- Connected Home
- Industrial and Building Automation
- Bluetooth mesh Low Power Nodes

KEY FEATURES

- Bluetooth 5.2
- Built-in antenna or RF pin
- Up to 6 dBm TX power
- -98.6 dBm BLE RX sensitivity at 1 Mbps
- 32-bit ARM Cortex-M33 core at up to 76.8 MHz
- 512/32 kB of Flash/RAM memory
- Optimal selection of MCU peripherals
- 25 GPIO pins
- 6 mm × 6 mm × 1.1 mm

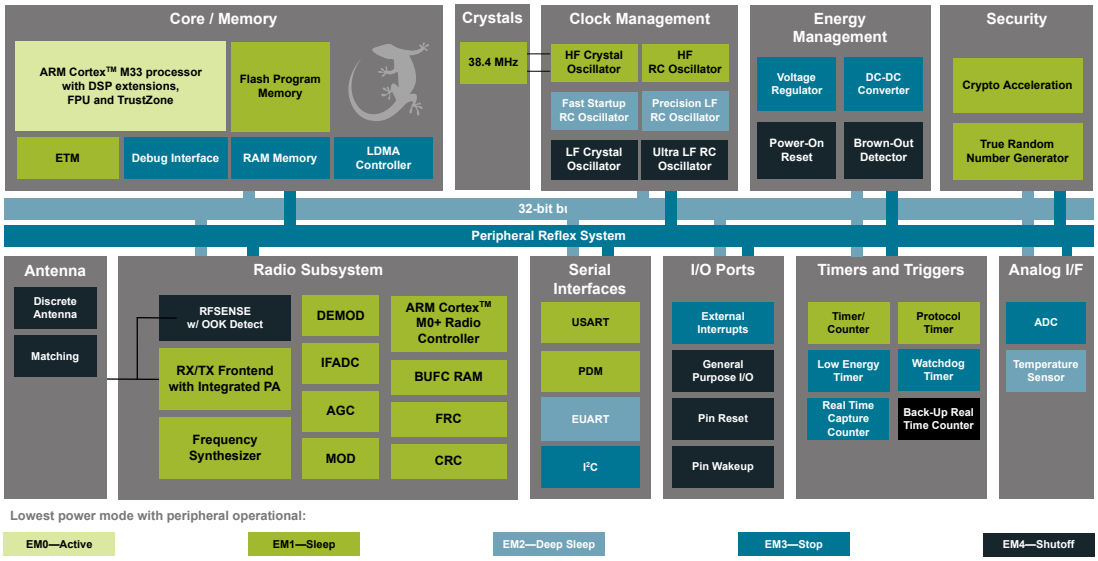

 Copyright © 2023 by Silicon Laboratories

1. Feature List

- **Supported Protocols**
  - Bluetooth Low Energy (Bluetooth 5.2)
    - Direction finding
    - 1M, 2M, and LE Coded PHYs
  - Bluetooth Mesh Low Power Node
- **Wireless System-on-Chip**
  - 2.4 GHz radio
  - TX power up to 6 dBm
  - High-performance 32-bit ARM Cortex-M33® with DSP instruction and floating-point unit for efficient signal processing
  - Up to 512 kB flash program memory
  - 32 kB RAM data memory
  - Embedded Trace Macrocell (ETM) for advanced debugging
- **High Receiver Performance**
  - -106.4 dBm sensitivity (0.1% BER) at 125 kbps GFSK
  - -102.3 dBm sensitivity (0.1% BER) at 500 kbps GFSK
  - -98.6 dBm sensitivity (0.1% BER) at 1 Mbps GFSK
  - -95.9 dBm sensitivity (0.1% BER) at 2 Mbps GFSK
- **Low-Energy Consumption**
  - 4.2 mA RX current at 1 Mbps GFSK
  - 4.6 mA TX current at 0 dBm output power
  - 26 µA/MHz in Active Mode (EM0)
  - 1.40 µA EM2 DeepSleep current (RTCC running from LFXO, Full RAM retention)
- **Regulatory Certifications**[1]
  - CE and UKCA - EU and UK
  - FCC - USA
  - ISED - Canada
  - MIC - Japan
  - KC - South Korea
- **Wide Operating Range**
  - 1.8 to 3.8 V
  - -40 to +105 °C and -40 to +85 °C Versions Available
- **Dimensions**
  - 6 mm × 6 mm × 1.1 mm
- **Security Features**
  - Secure Boot with Root of Trust and Secure Loader (RTSL)
  - Hardware Cryptographic Acceleration for AES128/256, SHA-1, SHA-2 (up to 256-bit), ECC (up to 256-bit), ECDSA, and ECDH
  - True Random Number Generator (TRNG) compliant with NIST SP800-90 and AIS-31
  - ARM® TrustZone®
  - Secure Debug with lock/unlock
- **Wide Selection of MCU Peripherals**
  - Analog to Digital Converter (ADC)
    - 12-bit @ 1 Msps
    - 16-bit @ 76.9 ksps
  - 25 General Purpose I/O pins with output state retention and asynchronous interrupts
  - 8 Channel DMA Controller
  - 12 Channel Peripheral Reflex System (PRS)
  - 4 × 16-bit Timer/Counter with 3 Compare/Capture/PWM channels
  - 1 × 32-bit Timer/Counter with 3 Compare/Capture/PWM channels
  - 32-bit Real Time Counter
  - 24-bit Low Energy Timer for waveform generation
  - 1 × Watchdog Timer
  - 2 × Universal Synchronous/Asynchronous Receiver/Transmitter (UART/SPI/SmartCard (ISO 7816)/IrDA/I^2S)
  - 1 × Enhanced Universal Asynchronous Receiver/Transmitter (EUART)
  - 2 × I^2C interface with SMBus support
  - Digital microphone interface (PDM)
  - RFSENSE with selective OOK mode

2. Ordering Information

Table 2.1. Ordering Information

Ordering Code	Protocol Stack	TX Power Rating	Max CPU Speed	Anten-na	RF Shield	Flash (kB)	RAM (kB)	GPIO	Temp Range
BGM220SC12WGA2	Bluetooth 5.2	0 dBm	38.4 MHz	Built-in	No	352	32	25	-40 to 85 °C
BGM220SC22HNA2	Bluetooth 5.2 • Direction Find-ing Rx	6 dBm	76.8 MHz	Built-in	Yes	512	32	25	-40 to 105 °C
BGM220SC22WGA2	Bluetooth 5.2	6 dBm	76.8 MHz	Built-in	Yes	352	32	25	-40 to 85 °C

Note:

1. End-product manufacturers must verify that the module is configured to meet regulatory limits for each region in accordance with the formal certification test reports.
2. Devices are pre-programmed with BGAPI UART DFU bootloader v1.10.2.
3. Throughout this document, the devices in the table above may be referred to by their product family name (e.g. BGM220S), by model name (BGM220S12A for 0 dBm TX power, BGM220S22A for 6 dBm TX power), or by full ordering code.
4. LE Long Range (125 kbps and 500 kbps) PHYs are only supported on part numbers which include direction-finding capability.
5. In accordance with the Bluetooth specification, the module operates over the following frequency range: 2402 - 2480 MHz. The module is also capable of operating in a separate custom transmit-only mode where proprietary packets are sent over the channels 2401 MHz and 2481 MHz using the same 1 Mbps GFSK modulation.
6. All devices in the table above support transmitting CTE (Constant Tone Extension) which is required in Direction Finding, but only specific devices support CTE receive. These devices are marked with "Direction Finding Rx" in the Protocol Stack Column.
7. The **SLWSTK6103A Wireless Starter Kit** is available for BGM220S evaluation and development, as well as the **SLWRB4312A** radio board.

Table of Contents

1. Feature List . . . 2

2. Ordering Information . . . 3

3. System Overview . . . 6

3.1 Introduction . . . 6

3.2 EFR32BG22 SoC . . . 7

3.3 Antenna . . . 7

3.4 Power Supply . . . 7

4. Electrical Characteristics . . . 8

4.1 Absolute Maximum Ratings . . . 8

4.2 General Operating Conditions . . . 9

4.2.1 DC-DC Operating Limits . . . 10

4.3 MCU Current Consumption with 3 V Supply . . . 11

4.4 Radio Current Consumption with 3 V Supply . . . 12

4.5 RF Transmitter General Characteristics for the 2.4 GHz Band . . . 13

4.6 RF Receiver General Characteristics for the 2.4 GHz Band . . . 13

4.7 RF Receiver Characteristics for Bluetooth Low Energy in the 2.4 GHz Band 1 Mbps Data Rate . . . 14

4.8 RF Receiver Characteristics for Bluetooth Low Energy in the 2.4 GHz Band 2 Mbps Data Rate . . . 15

4.9 RF Receiver Characteristics for Bluetooth Low Energy in the 2.4 GHz Band 500 kbps Data Rate . . . 16

4.10 RF Receiver Characteristics for Bluetooth Low Energy in the 2.4 GHz Band 125 kbps Data Rate . . . 17

4.11 High-Frequency Crystal . . . 18

4.12 Low Frequency Crystal Oscillator . . . 18

4.13 Precision Low Frequency RC Oscillator (LFRCO) . . . 19

4.14 GPIO Pins . . . 20

4.15 Microcontroller Peripherals . . . 21

4.16 Typical Performance Curves . . . 21

4.16.1 Antenna Typical Characteristics . . . 22

5. Reference Diagrams . . . 24

5.1 Network Co-Processor (NCP) Application with UART Host . . . 24

5.2 SoC Application . . . 25

6. Pin Definitions . . . 26

6.1 44-Pin SiP Module Device Pinout . . . 26

6.2 Alternate Function Table . . . 28

6.3 Analog Peripheral Connectivity . . . 28

6.4 Digital Peripheral Connectivity . . . 29

7. Design Guidelines . . . 32

7.1 Layout and Placement 32
7.2 Best Design Practices 35
7.3 Radio Performance vs. Carrier Board Size 37
7.4 Proximity to Other Materials 38
7.5 Proximity to Human Body 38

8. Package Specifications 39

8.1 Package Dimensions 39
8.2 Recommended PCB Land Pattern 41
8.3 Top Marking 42

9. Soldering Recommendations 43

10. Tape and Reel 44

11. Certifications 46

11.1 Regulatory Certifications 46
11.1.1 Qualified Antennas. 46
11.1.2 EU and UK - CE and UKCA. 46
11.1.3 USA - FCC 47
11.1.4 ISED Canada 49
11.1.5 Proximity to Human Body 52
11.1.6 Japan - MIC 53
11.1.7 South Korea - KC 54
11.1.8 Taiwan (NCC) 55

11.2 Standards-Based Certifications 56
11.2.1 Bluetooth Qualification 56

12. Revision History. 57

3. System Overview

3.1 Introduction

The BGM220S module combines an energy-friendly MCU with a highly integrated radio transceiver in a SiP module with a robust, integrated antenna. This section gives a short introduction to the features of the module.

The block diagram for the BGM220S module is shown in the figure below. The wireless module includes the EFR32BG22 wireless System on a Chip (SoC), required decoupling capacitors and inductors, 38.4 MHz crystal, RF matching circuit, and integrated antenna.

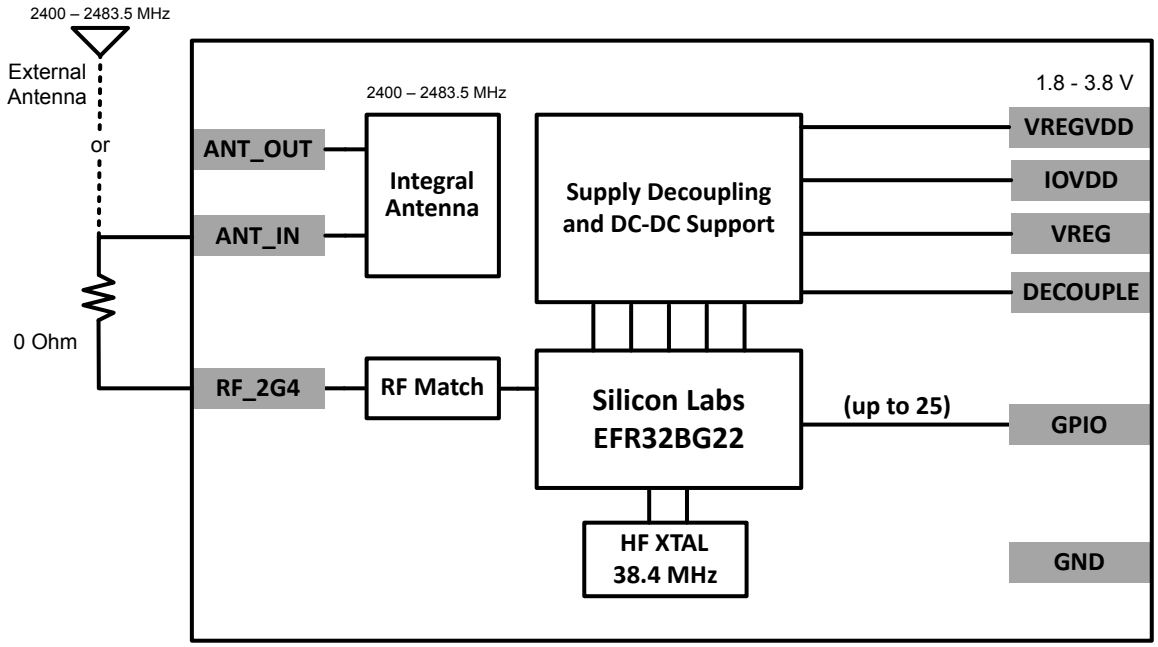

Figure 3.1. BGM220S Block Diagram

A simplified internal schematic for the BGM220S module is shown in the figure below.

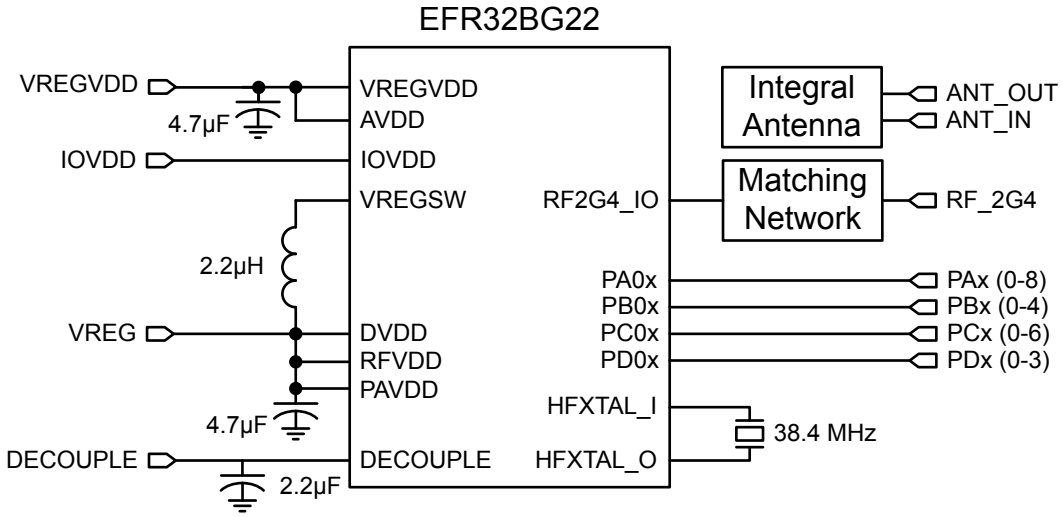

Figure 3.2. BGM220S Module Schematic

3.2 EFR32BG22 SoC

The EFR32BG22 SoC features a 32-bit ARM Cortex M33 core, a 2.4 GHz high-performance radio, 512 kB of flash memory, a rich set of MCU peripherals, and various clock management and serial interfacing options. Consult the EFR32xG22 Wireless Gecko Reference Manual and the EFR32BG22 Data Sheet for details.

3.3 Antenna

BGM220S modules include an integral antenna on board with the characteristics detailed in the tables below.

Table 3.1. Antenna Efficiency and Peak Gain (BGM220S12A)

Parameter	With optimal layout	Note
Efficiency	-1.4 to -2.6 dB	Antenna efficiency, gain and radiation pattern are highly dependent on the application PCB layout and mechanical design. Refer to 7. Design Guidelines for recommendations to achieve optimal antenna performance.
Peak gain	1.5 dBi	

Table 3.2. Antenna Efficiency and Peak Gain (BGM220S22A)

Parameter	With optimal layout	Note
Efficiency	-1 to -2 dB	Antenna efficiency, gain and radiation pattern are highly dependent on the application PCB layout and mechanical design. Refer to 7. Design Guidelines for recommendations to achieve optimal antenna performance.
Peak gain	2.3 dBi	

3.4 Power Supply

The BGM220S requires a single nominal supply level of 3.0 V to operate. All necessary decoupling and filtering components are included in the module, and the supply is fully regulated internally.

4. Electrical Characteristics

All electrical parameters in all tables are specified under the following conditions, unless stated otherwise:

- Typical values are based on T_A=25 °C and VREGVDD supply at 3.0 V, by production test and/or technology characterization.
- Minimum and maximum values represent the worst conditions across supply voltage, process variation, and operating temperature, unless stated otherwise.

4.1 Absolute Maximum Ratings

Stresses beyond those listed below may cause permanent damage to the device. This is a stress rating only and functional operation of the devices at those or any other conditions beyond those indicated in the operation listings of this specification is not implied. Exposure to maximum rating conditions for extended periods may affect device reliability. For more information on the available quality and reliability data, see the Quality and Reliability Monitor Report at http://www.silabs.com/support/quality/pages/default.aspx.

Table 4.1. Absolute Maximum Ratings

Parameter	Symbol	Test Condition	Min	Typ	Max	Unit
Storage temperature range	T_{STG}		-40	—	+125	°C
Voltage on any supply pin	V_{DDMAX}		-0.3	—	3.8	V
Junction temperature	T_{JMAX}	-G grade	—	—	+105	°C
		-N grade	—	—	+105	°C
Voltage ramp rate on any supply pin	$V_{DDRAMPMAX}$		—	—	1.0	V / µs
DC voltage on any GPIO pin	V_{DIGPIN}		-0.3	—	V_{IOVDD} + 0.3	V
Input RF level on RF pin RF_2G4	$P_{RFMAX2G4}$		—	—	+10	dBm
Absolute voltage on RF pin RF_2G4	V_{MAX2G4}		-0.3	—	V_{VREG} + 0.3	V
Total current into VDD power lines	I_{VDDMAX}	Source	—	—	200	mA
Total current into VSS ground lines	I_{VSSMAX}	Sink	—	—	200	mA
Current per I/O pin	I_{IOMAX}	Sink	—	—	50	mA
		Source	—	—	50	mA
Current for all I/O pins	$I_{IOALLMAX}$	Sink	—	—	200	mA
		Source	—	—	200	mA

4.2 General Operating Conditions

This table specifies the general operating temperature range and supply voltage range for all supplies. The minimum and maximum values of all other tables are specifed over this operating range, unless otherwise noted.

Table 4.2. General Operating Conditions

Parameter	Symbol	Test Condition	Min	Typ	Max	Unit
Operating ambient temperature range	T_A	-G temperature grade	-40	—	+85	°C
		-N temperature grade	-40	—	+105	°C
IOVDDx operating supply voltage (All IOVDD pins)	V_{IOVDDx}		1.71	3.0	3.8	V
VREGVDD operating supply voltage	$V_{VREGVDD}$	DCDC in regulation[1]	2.2	3.0	3.8	V
		DCDC in bypass	1.8	3.0	3.8	V
HCLK and SYSCLK frequency	f_{HCLK}	VSCALE2, MODE = WS1	—	—	76.8	MHz
		VSCALE2, MODE = WS0	—	—	40	MHz
PCLK frequency	f_{PCLK}	VSCALE2	—	—	50	MHz
		VSCALE1	—	—	40	MHz
EM01 Group A clock frequency	$f_{EM01GRPACLK}$	VSCALE2	—	—	76.8	MHz
		VSCALE1	—	—	40	MHz
EM01 Group B clock frequency	$f_{EM01GRPBCLK}$	VSCALE2	—	—	76.8	MHz
		VSCALE1	—	—	40	MHz
Radio HCLK frequency[2]	f_{RHCLK}	VSCALE2 or VSCALE1	—	38.4	—	MHz

Note:

1. The supported maximum $V_{VREGVDD}$ in regulation mode is a function of temperature and 10-year lifetime average load current. See more details in 4.2.1 DC-DC Operating Limits.
2. The recommended radio crystal frequency is 38.4 MHz. Any crystal frequency other than 38.4 is expressly not supported.

4.2.1 DC-DC Operating Limits

The maximum supported voltage on the VREGVDD supply pin is limited under certain conditions. Maximum input voltage is a function of temperature and the average load current over a 10-year lifetime. Figure 4.1 Lifetime average load current limit vs. Maximum input voltage on page 10 shows the safe operating region under specific conditions. Exceeding this safe operating range may impact the reliability and performance of the DC-DC converter.

The average load current for an application can typically be determined by examining the current profile during the time the device is powered. For example, an application that is continuously powered which spends 99% of the time asleep consuming 2 µA and 1% of the time active and consuming 10 mA has an average lifetime load current of about 102 µA.

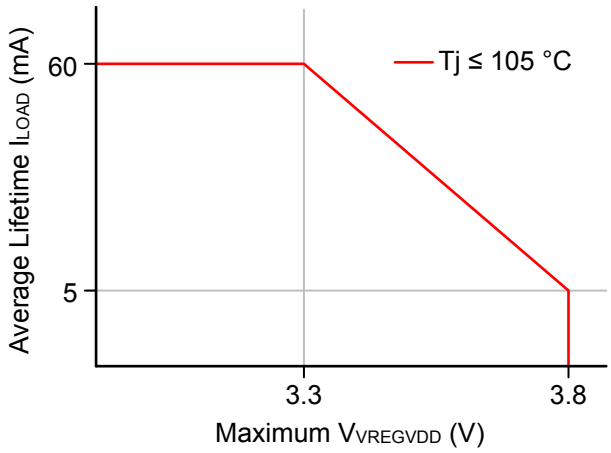

Figure 4.1. Lifetime average load current limit vs. Maximum input voltage

The minimum input voltage for the DC-DC in EM0/EM1 mode is a function of the maximum load current, and the peak current setting. Figure 4.2 Transient maximum load current vs. Minimum input voltage on page 10 shows the max load current vs. input voltage for different DC-DC peak inductor current settings.

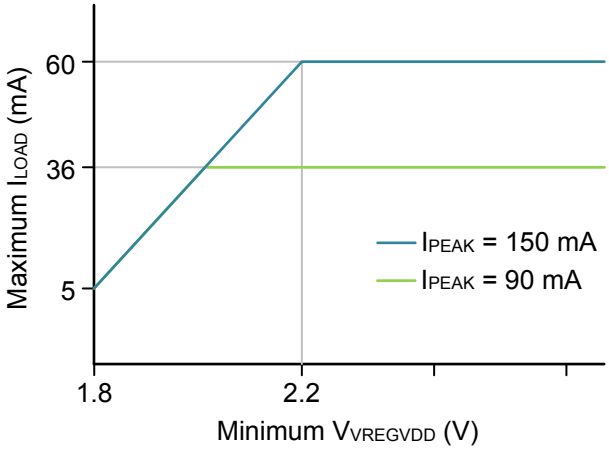

Figure 4.2. Transient maximum load current vs. Minimum input voltage

4.3 MCU Current Consumption with 3 V Supply

Unless otherwise indicated, typical conditions are: Module supply voltage = 3.0 V. Voltage scaling level = VSCALE1. T_A = 25 °C. Minimum and maximum values in this table represent the worst conditions across process variation at T_A = 25 °C.

Table 4.3. MCU Current Consumption with 3 V Supply

Parameter	Symbol	Test Condition	Min	Typ	Max	Unit
Current consumption in EM0 mode with all peripherals disabled	I_{ACTIVE}	76.8 MHz HFRCO w/ DPLL referenced to 38.4 MHz crystal, CPU running while loop from flash, VSCALE2	—	27	—	µA/MHz
		76.8 MHz HFRCO w/ DPLL referenced to 38.4 MHz crystal, CPU running CoreMark loop from flash, VSCALE2	—	37	—	µA/MHz
		38.4 MHz crystal, CPU running Prime from flash	—	28	—	µA/MHz
		38.4 MHz crystal, CPU running while loop from flash	—	26	—	µA/MHz
		38.4 MHz crystal, CPU running CoreMark loop from flash	—	38	—	µA/MHz
		38 MHz HFRCO, CPU running while loop from flash	—	22	—	µA/MHz
		76.8 MHz HFRCO w/ DPLL referenced to 38.4 MHz crystal, CPU running Prime from flash, VSCALE2	—	28	—	µA/MHz
Current consumption in EM1 mode with all peripherals disabled	I_{EM1}	76.8 MHz HFRCO w/ DPLL referenced to 38.4 MHz crystal, VSCALE2	—	17	—	µA/MHz
		38.4 MHz crystal	—	17	—	µA/MHz
		38 MHz HFRCO	—	13	—	µA/MHz
Current consumption in EM2 mode, VSCALE0	I_{EM2_VS}	Full RAM retention and RTC running from LFXO	—	1.40	—	µA
		Full RAM retention and RTC running from LFRCO	—	1.40	—	µA
		Full RAM retention and RTC running from LFRCO in precision mode	—	1.75	—	µA
		24 kB RAM retention and RTC running from LFXO	—	1.32	—	µA
		24 kB RAM retention and RTC running from LFRCO in precision mode	—	1.66	—	µA
		8 kB RAM retention and RTC running from LFXO	—	1.21	—	µA
		8 kB RAM retention and RTC running from LFRCO	—	1.20	—	µA
Current consumption in EM3 mode, VSCALE0	I_{EM3_VS}	8 kB RAM retention and RTC running from ULFRCO	—	1.05	—	µA

Parameter	Symbol	Test Condition	Min	Typ	Max	Unit
Current consumption in EM4 mode	I_{EM4}	No BURTC, No LF Oscillator, DCDC bypassed	—	0.17	—	µA
Additional current in EM2 or EM3 when any peripheral in PD0B is enabled[1]	I_{PD0B_VS}		—	0.37	—	µA

Note:

1. Extra current consumed by power domain. Does not include current associated with the enabled peripherals. See for a list of the peripherals in each power domain.

4.4 Radio Current Consumption with 3 V Supply

RF current consumption measured with MCU in EM1, HCLK = 38.4 MHz, and all MCU peripherals disabled. Unless otherwise indicated, typical conditions are: VREGVDD = 3.0 V. T_A = 25 °C. Minimum and maximum values in this table represent the worst conditions across process variation at T_A = 25 °C.

Table 4.4. Radio Current Consumption with 3 V Supply

Parameter	Symbol	Test Condition	Min	Typ	Max	Unit
System current consumption in receive mode, active packet reception	I_{RX_ACTIVE}	125 kbit/s, 2GFSK, f = 2.4 GHz, Bluetooth stack running	—	4.2	—	mA
		500 kbit/s, 2GFSK, f = 2.4 GHz, Bluetooth stack running	—	4.3	—	mA
		1 Mbit/s, 2GFSK, f = 2.4 GHz, Bluetooth stack running	—	4.2	—	mA
		2 Mbit/s, 2GFSK, f = 2.4 GHz, Bluetooth stack running	—	4.8	—	mA
System current consumption in receive mode, listening for packet	I_{RX_LISTEN}	125 kbit/s, 2GFSK, f = 2.4 GHz, Bluetooth stack running	—	4.3	—	mA
		500 kbit/s, 2GFSK, f = 2.4 GHz, Bluetooth stack running	—	4.3	—	mA
		1 Mbit/s, 2GFSK, f = 2.4 GHz, Bluetooth stack running	—	4.2	—	mA
		2 Mbit/s, 2GFSK, f = 2.4 GHz, Bluetooth stack running	—	4.7	—	mA
System current consumption in transmit mode	I_{TX}	f = 2.4 GHz, CW, 0 dBm output power	—	4.6	—	mA
		f = 2.4 GHz, CW, 6 dBm output power	—	8.8	—	mA

4.5 RF Transmitter General Characteristics for the 2.4 GHz Band

Unless otherwise indicated, typical conditions are: T_A = 25 °C, VREGVDD = 3.0V. RF center frequency 2.45 GHz.

Table 4.5. RF Transmitter General Characteristics for the 2.4 GHz Band

Parameter	Symbol	Test Condition	Min	Typ	Max	Unit
RF tuning frequency range	F_{RANGE}		2400	—	2483.5	MHz
Maximum TX power[1]	$POUT_{MAX}$	6 dBm output power	—	6.0	—	dBm
		0 dBm output power	—	-0.5	—	dBm
Minimum active TX Power	$POUT_{MIN}$		—	-27	—	dBm
Output power variation vs VREGVDD supply voltage variation, frequency = 2450 MHz	$POUT_{VAR_V}$	6 dBm output power with VREGVDD voltage swept from 1.8 V to 3.0 V	—	0.04	—	dB
		0 dBm output power, with VREGVDD voltage swept from 1.8 to 3.0 V	—	0.04	—	dB
Output power variation vs temperature, Frequency = 2450 MHz	$POUT_{VAR_T}$	6 dBm output power, (-40 to +105 °C)	—	0.2	—	dB
		0 dBm output power, (-40 to +105 °C)	—	1.3	—	dB
		6 dBm output power, (-40 to +85 °C)	—	0.1	—	dB
		0 dBm output power, (-40 to +85 °C)	—	1.0	—	dB
Output power variation vs RF frequency	$POUT_{VAR_F}$	6 dBm output power	—	0.09	—	dB
		0 dBm output power	—	0.15	—	dB

Note:

1. Supported transmit power levels are determined by the ordering part number (OPN). Transmit power ratings for all devices covered in this data sheet can be found in the Max TX Power column of the Ordering Information Table.

4.6 RF Receiver General Characteristics for the 2.4 GHz Band

Unless otherwise indicated, typical conditions are: T_A = 25 °C, VREGVDD = 3.0V. RF center frequency 2.45 GHz.

Table 4.6. RF Receiver General Characteristics for the 2.4 GHz Band

Parameter	Symbol	Test Condition	Min	Typ	Max	Unit
RF tuning frequency range	F_{RANGE}		2400	—	2483.5	MHz

4.7 RF Receiver Characteristics for Bluetooth Low Energy in the 2.4 GHz Band 1 Mbps Data Rate

Unless otherwise indicated, typical conditions are: T_A = 25 °C, VREGVDD = 3.0V. RF center frequency 2.45 GHz.

Table 4.7. RF Receiver Characteristics for Bluetooth Low Energy in the 2.4 GHz Band 1 Mbps Data Rate

Parameter	Symbol	Test Condition	Min	Typ	Max	Unit
Max usable receiver input level	SAT	Signal is reference signal[1]	—	10	—	dBm
Sensitivity	SENS	Signal is reference signal, 37 byte payload[2]	—	-98.6	—	dBm
		Signal is reference signal, 255 byte payload[1]	—	-97.2	—	dBm
		With non-ideal signals[3 1]	—	-96.6	—	dBm
Signal to co-channel interferer	C/I_{CC}	(see notes)[1 4]	—	8.7	—	dB
N ± 1 Adjacent channel selectivity	C/I_1	Interferer is reference signal at +1 MHz offset[1 5 4 6]	—	-6.6	—	dB
		Interferer is reference signal at -1 MHz offset[1 5 4 6]	—	-6.5	—	dB
N ± 2 Alternate channel selectivity	C/I_2	Interferer is reference signal at +2 MHz offset[1 5 4 6]	—	-40.9	—	dB
		Interferer is reference signal at -2 MHz offset[1 5 4 6]	—	-39.9	—	dB
N ± 3 Alternate channel selectivity	C/I_3	Interferer is reference signal at +3 MHz offset[1 5 4 6]	—	-45.9	—	dB
		Interferer is reference signal at -3 MHz offset[1 5 4 6]	—	-46.2	—	dB
Selectivity to image frequency	C/I_{IM}	Interferer is reference signal at image frequency with 1 MHz precision[1 6]	—	-23.5	—	dB
Selectivity to image frequency ± 1 MHz	C/I_{IM_1}	Interferer is reference signal at image frequency +1 MHz with 1 MHz precision[1 6]	—	-40.9	—	dB
		Interferer is reference signal at image frequency -1 MHz with 1 MHz precision[1 6]	—	-6.6	—	dB
Intermodulation performance	IM	n = 3 (see note[7])	—	-17.1	—	dBm

Note:

1. 0.017% Bit Error Rate.
2. 0.1% Bit Error Rate.
3. With non-ideal signals as specified in Bluetooth Test Specification RF-PHY.TS.5.0.1 section 4.7.1
4. Desired signal -67 dBm.
5. Measured frequency is 2401 MHz ≤ Fc ≤ 2481 MHz.
6. With allowed exceptions.
7. As specified in Bluetooth Core specification version 5.1, Vol 6, Part A, Section 4.4

4.8 RF Receiver Characteristics for Bluetooth Low Energy in the 2.4 GHz Band 2 Mbps Data Rate

Unless otherwise indicated, typical conditions are: T_A = 25 °C, VREGVDD = 3.0V. RF center frequency 2.45 GHz.

Table 4.8. RF Receiver Characteristics for Bluetooth Low Energy in the 2.4 GHz Band 2 Mbps Data Rate

Parameter	Symbol	Test Condition	Min	Typ	Max	Unit
Max usable receiver input level	SAT	Signal is reference signal[1]	—	10	—	dBm
Sensitivity	SENS	Signal is reference signal, 37 byte payload[2]	—	-95.9	—	dBm
		Signal is reference signal, 255 byte payload[1]	—	-94.3	—	dBm
		With non-ideal signals[3 1]	—	-94.0	—	dBm
Signal to co-channel interferer	C/I_{CC}	(see notes)[1 4]	—	8.8	—	dB
N ± 1 Adjacent channel selectivity	C/I_1	Interferer is reference signal at +2 MHz offset[1 5 4 6]	—	-9.2	—	dB
		Interferer is reference signal at -2 MHz offset[1 5 4 6]	—	-6.6	—	dB
N ± 2 Alternate channel selectivity	C/I_2	Interferer is reference signal at +4 MHz offset[1 5 4 6]	—	-43.3	—	dB
		Interferer is reference signal at -4 MHz offset[1 5 4 6]	—	-44.0	—	dB
N ± 3 Alternate channel selectivity	C/I_3	Interferer is reference signal at +6 MHz offset[1 5 4 6]	—	-48.6	—	dB
		Interferer is reference signal at -6 MHz offset[1 5 4 6]	—	-50.7	—	dB
Selectivity to image frequency	C/I_{IM}	Interferer is reference signal at image frequency with 1 MHz precision[1 6]	—	-23.8	—	dB
Selectivity to image frequency ± 2 MHz	C/I_{IM_1}	Interferer is reference signal at image frequency +2 MHz with 1 MHz precision[1 6]	—	-43.3	—	dB
		Interferer is reference signal at image frequency -2 MHz with 1 MHz precision[1 6]	—	-9.2	—	dB
Intermodulation performance	IM	n = 3 (see note[7])	—	-18.8	—	dBm

Note:

1. 0.017% Bit Error Rate.
2. 0.1% Bit Error Rate.
3. With non-ideal signals as specified in Bluetooth Test Specification RF-PHY.TS.5.0.1 section 4.7.1
4. Desired signal -64 dBm.
5. Measured frequency is 2401 MHz ≤ Fc ≤ 2481 MHz.
6. With allowed exceptions.
7. As specified in Bluetooth Core specification version 5.1, Vol 6, Part A, Section 4.4

4.9 RF Receiver Characteristics for Bluetooth Low Energy in the 2.4 GHz Band 500 kbps Data Rate

Unless otherwise indicated, typical conditions are: T_A = 25 °C, VREGVDD = 3.0V. RF center frequency 2.45 GHz.

Table 4.9. RF Receiver Characteristics for Bluetooth Low Energy in the 2.4 GHz Band 500 kbps Data Rate

Parameter	Symbol	Test Condition	Min	Typ	Max	Unit
Max usable receiver input level	SAT	Signal is reference signal[1]	—	10	—	dBm
Sensitivity	SENS	Signal is reference signal, 37 byte payload[2]	—	-102.3	—	dBm
		Signal is reference signal, 255 byte payload[1]	—	-100.9	—	dBm
		With non-ideal signals[3] [1]	—	-99.8	—	dBm
Signal to co-channel interferer	C/I_{CC}	(see notes)[1] [4]	—	2.7	—	dB
N ± 1 Adjacent channel selectivity	C/I_1	Interferer is reference signal at +1 MHz offset[1] [5] [4] [6]	—	-8.0	—	dB
		Interferer is reference signal at -1 MHz offset[1] [5] [4] [6]	—	-7.9	—	dB
N ± 2 Alternate channel selectivity	C/I_2	Interferer is reference signal at +2 MHz offset[1] [5] [4] [6]	—	-46.5	—	dB
		Interferer is reference signal at -2 MHz offset[1] [5] [4] [6]	—	-49.9	—	dB
N ± 3 Alternate channel selectivity	C/I_3	Interferer is reference signal at +3 MHz offset[1] [5] [4] [6]	—	-48.9	—	dB
		Interferer is reference signal at -3 MHz offset[1] [5] [4] [6]	—	-53.8	—	dB
Selectivity to image frequency	C/I_{IM}	Interferer is reference signal at image frequency with 1 MHz precision[1] [6]	—	-48.3	—	dB
Selectivity to image frequency ± 1 MHz	C/I_{IM_1}	Interferer is reference signal at image frequency +1 MHz with 1 MHz precision[1] [6]	—	-49.9	—	dB
		Interferer is reference signal at image frequency -1 MHz with 1 MHz precision[1] [6]	—	-46.5	—	dB

Note:

1. 0.017% Bit Error Rate.
2. 0.1% Bit Error Rate.
3. With non-ideal signals as specified in Bluetooth Test Specification RF-PHY.TS.5.0.1 section 4.7.1
4. Desired signal -72 dBm.
5. Measured frequency is 2401 MHz ≤ Fc ≤ 2481 MHz.
6. With allowed exceptions.

4.10 RF Receiver Characteristics for Bluetooth Low Energy in the 2.4 GHz Band 125 kbps Data Rate

Unless otherwise indicated, typical conditions are: T_A = 25 °C, VREGVDD = 3.0V. RF center frequency 2.45 GHz.

Table 4.10. RF Receiver Characteristics for Bluetooth Low Energy in the 2.4 GHz Band 125 kbps Data Rate

Parameter	Symbol	Test Condition	Min	Typ	Max	Unit
Max usable receiver input level	SAT	Signal is reference signal[1]	—	10	—	dBm
Sensitivity	SENS	Signal is reference signal, 37 byte payload[2]	—	-106.4	—	dBm
		Signal is reference signal, 255 byte payload[1]	—	-106.0	—	dBm
		With non-ideal signals[3] [1]	—	-105.6	—	dBm
Signal to co-channel interferer	C/I_{CC}	(see notes)[1] [4]	—	0.9	—	dB
N ± 1 Adjacent channel selectivity	C/I_1	Interferer is reference signal at +1 MHz offset[1] [5] [4] [6]	—	-13.6	—	dB
		Interferer is reference signal at -1 MHz offset[1] [5] [4] [6]	—	-13.4	—	dB
N ± 2 Alternate channel selectivity	C/I_2	Interferer is reference signal at +2 MHz offset[1] [5] [4] [6]	—	-52.6	—	dB
		Interferer is reference signal at -2 MHz offset[1] [5] [4] [6]	—	-55.8	—	dB
N ± 3 Alternate channel selectivity	C/I_3	Interferer is reference signal at +3 MHz offset[1] [5] [4] [6]	—	-53.7	—	dB
		Interferer is reference signal at -3 MHz offset[1] [5] [4] [6]	—	-59.0	—	dB
Selectivity to image frequency	C/I_{IM}	Interferer is reference signal at image frequency with 1 MHz precision[1] [6]	—	-52.7	—	dB
Selectivity to image frequency ± 1 MHz	C/I_{IM_1}	Interferer is reference signal at image frequency +1 MHz with 1 MHz precision[1] [6]	—	-53.7	—	dB
		Interferer is reference signal at image frequency -1 MHz with 1 MHz precision[1] [6]	—	-52.6	—	dB

Note:

1. 0.017% Bit Error Rate.
2. 0.1% Bit Error Rate.
3. With non-ideal signals as specified in Bluetooth Test Specification RF-PHY.TS.5.0.1 section 4.7.1
4. Desired signal -79 dBm.
5. Measured frequency is 2401 MHz ≤ Fc ≤ 2481 MHz.
6. With allowed exceptions.

4.11 High-Frequency Crystal

Table 4.11. High-Frequency Crystal

Parameter	Symbol	Test Condition	Min	Typ	Max	Unit
Crystal frequency	f_{HFXTAL}		—	38.4	—	MHz
Initial calibrated accuracy	ACC_{HFXTAL}		-10	—	10	ppm
Temperature drift	$DRIFT_{HFXTAL}$	Across specified temperature range	-20	—	20	ppm

4.12 Low Frequency Crystal Oscillator

Table 4.12. Low Frequency Crystal Oscillator

Parameter	Symbol	Test Condition	Min	Typ	Max	Unit
Crystal Frequency	F_{LFXO}		—	32.768	—	kHz
Supported Crystal equivalent series resistance (ESR)	ESR_{LFXO}	GAIN = 0	—	—	80	kΩ
		GAIN = 1 to 3	—	—	100	kΩ
Supported range of crystal load capacitance [1]	C_{LFXO_CL}	GAIN = 0	4	—	6	pF
		GAIN = 1	6	—	10	pF
		GAIN = 2 (see note[2])	10	—	12.5	pF
		GAIN = 3 (see note[2])	12.5	—	18	pF
Current consumption	I_{CL12p5}	ESR = 70 kOhm, CL = 12.5 pF, GAIN[3] = 2, AGC[4] = 1	—	357	—	nA
Startup Time	$T_{STARTUP}$	ESR = 70 kOhm, CL = 7 pF, GAIN[3] = 1, AGC[4] = 1	—	63	—	ms
On-chip tuning cap step size	SS_{LFXO}		—	0.26	—	pF
On-chip tuning capacitor value at minimum setting[5]	C_{LFXO_MIN}	CAPTUNE = 0	—	4	—	pF
On-chip tuning capacitor value at maximum setting[5]	C_{LFXO_MAX}	CAPTUNE = 0x4F	—	24.5	—	pF

Note:

1. Total load capacitance seen by the crystal
2. Crystals with a load capacitance of greater than 12 pF require external load capacitors.
3. In LFXO_CAL Register
4. In LFXO_CFG Register
5. The effective load capacitance seen by the crystal will be $C_{LFXO}/2$. This is because each XTAL pin has a tuning cap and the two caps will be seen in series by the crystal

4.13 Precision Low Frequency RC Oscillator (LFRCO)

Table 4.13. Precision Low Frequency RC Oscillator (LFRCO)

Parameter	Symbol	Test Condition	Min	Typ	Max	Unit
Nominal oscillation frequency	F_{LFRCO}		—	32.768	—	kHz
Frequency accuracy	F_{LFRCO_ACC}	Normal mode	-3	—	3	%
		Precision mode[1], across operating temperature range[2]	-500	—	500	ppm
Startup time	$t_{STARTUP}$	Normal mode	—	204	—	µs
		Precision mode[1]	—	11.7	—	ms
Current consumption	I_{LFRCO}	Normal mode	—	175	—	nA
		Precision mode[1], T = stable at 25 °C [3]	—	655	—	nA

Note:

1. The LFRCO operates in high-precision mode when CFG_HIGHPRECEN is set to 1. High-precision mode is not available in EM4.
2. Includes ± 40 ppm frequency tolerance of the HFXO crystal.
3. Includes periodic re-calibration against HFXO crystal oscillator.

4.14 GPIO Pins

Unless otherwise indicated, typical conditions are: IOVDD = 3.0 V.

Table 4.14. GPIO Pins

Parameter	Symbol	Test Condition	Min	Typ	Max	Unit
Leakage current	I_{LEAK_IO}	MODEx = DISABLED, IOVDD = 1.71 V	—	1.9	—	nA
		MODEx = DISABLED, IOVDD = 3.0 V	—	2.5	—	nA
Input low voltage[1]	V_{IL}	Any GPIO pin	—	—	0.3*IOVDD	V
		RESETn	—	—	0.3*DVDD	V
Input high voltage[1]	V_{IH}	Any GPIO pin	0.7*IOVDD	—	—	V
		RESETn	0.7*DVDD	—	—	V
Hysteresis of input voltage	V_{HYS}	Any GPIO pin	0.05*IOVDD	—	—	V
		RESETn	0.05*DVDD	—	—	V
Output high voltage	V_{OH}	Sourcing 20mA, IOVDD = 3.0 V	0.8 * IOVDD	—	—	V
		Sourcing 8mA, IOVDD = 1.71 V	0.6 * IOVDD	—	—	V
Output low voltage	V_{OL}	Sinking 20mA, IOVDD = 3.0 V	—	—	0.2 * IOVDD	V
		Sinking 8mA, IOVDD = 1.71 V	—	—	0.4 * IOVDD	V
GPIO rise time	T_{GPIO_RISE}	IOVDD = 3.0 V, C_{load} = 50pF, SLEWRATE = 4, 10% to 90%	—	8.4	—	ns
		IOVDD = 1.71 V, C_{load} = 50pF, SLEWRATE = 4, 10% to 90%	—	13	—	ns
GPIO fall time	T_{GPIO_FALL}	IOVDD = 3.0 V, C_{load} = 50pF, SLEWRATE = 4, 90% to 10%	—	7.1	—	ns
		IOVDD = 1.71 V, C_{load} = 50pF, SLEWRATE = 4, 90% to 10%	—	11.9	—	ns
Pull up/down resistance[2]	R_{PULL}	Any GPIO pin. Pull-up to IOVDD: MODEn = DISABLE DOUT=1. Pull-down to VSS: MODEn = WIREDORPULLDOWN DOUT = 0.	35	44	55	kΩ
		RESETn pin. Pull-up to DVDD	35	44	55	kΩ
Maximum filtered glitch width	T_{GF}	MODE = INPUT, DOUT = 1	—	27	—	ns
RESETn low time to ensure pin reset	T_{RESET}		100	—	—	ns

Note:

1. GPIO input thresholds are proportional to the IOVDD pin. RESETn input thresholds are proportional to DVDD.
2. GPIO pull-ups connect to IOVDD supply, pull-downs connect to VSS. RESETn pull-up connects to DVDD.

4.15 Microcontroller Peripherals

The MCU peripherals set available in BGM220S modules includes:

- ADC: 12-bit at 1 Msps, 16-bit at 76.9 ksps
- 16-bit and 32-bit Timers/Counters
- 24-bit Low Energy Timer for waveform generation
- 32-bit Real Time Counter
- USART (UART/SPI/SmartCards/IrDA/I2S)
- EUART (UART/IrDA)
- I^2C peripheral interfaces
- PDM interface
- 12 Channel Peripheral Reflex System

For details on their electrical performance, consult the relevant portions of Section 4 in the SoC datasheet.

To learn which GPIO ports provide access to every peripheral, consult Analog Peripheral Connectivity and Digital Peripheral Connectivity.

4.16 Typical Performance Curves

Typical performance curves indicate typical characterized performance under the stated conditions.

4.16.1 Antenna Typical Characteristics

Typical BGM220S radiation patterns for the on-board chip antenna under optimal operating conditions are plotted in the figures that follow. Antenna gain and radiation patterns have a strong dependence on the size and shape of the application PCB the module is mounted on, as well as on the proximity of any mechanical design to the antenna.

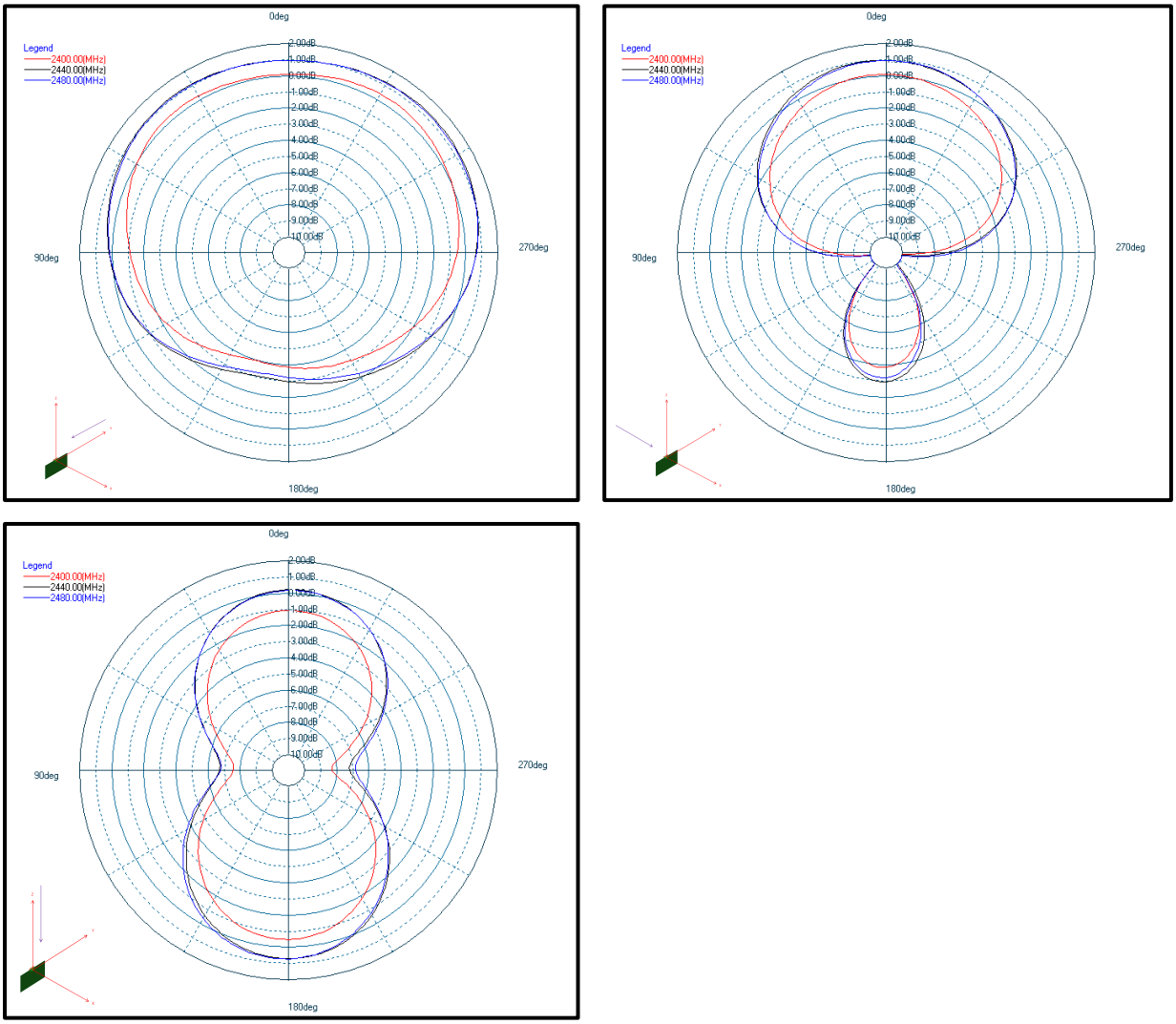

Top Left: Phi 0°, Top Right: Phi 90°, Bottom Left: Theta 90°

Figure 4.3. BGM220S12A Typical 2D Antenna Radiation Patterns on 50 mm x 30 mm board

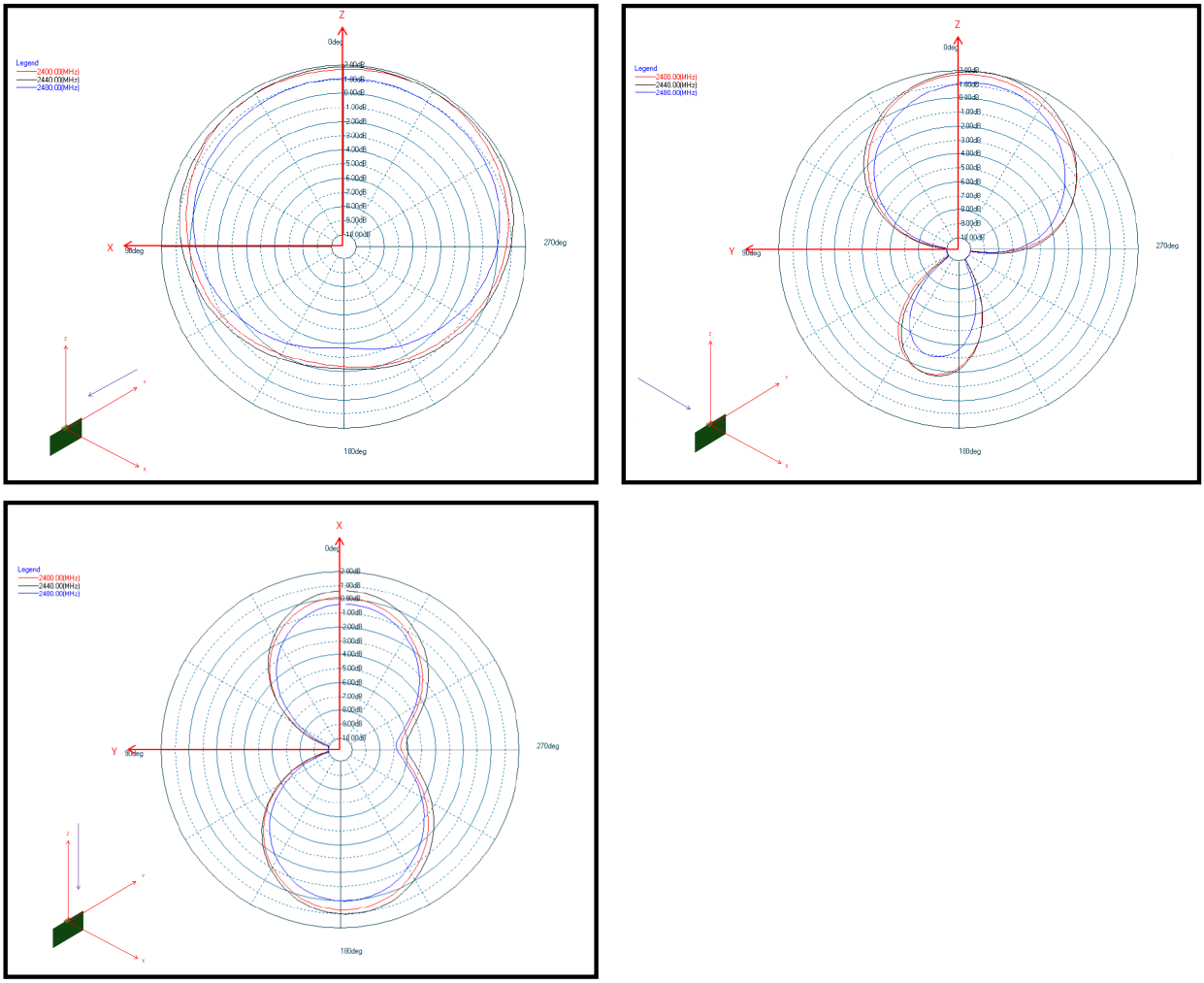

Top Left: Phi 0°, Top Right: Phi 90°, Bottom Left: Theta 90°

Figure 4.4. BGM220S22A Typical 2D Antenna Radiation Patterns on 55 mm x 20 mm board

5. Reference Diagrams

5.1 Network Co-Processor (NCP) Application with UART Host

The BGM220S can be controlled over the UART interface as a peripheral to an external host processor. Typical power supply, programming/debug interface, and host interface connections are shown in the figure below. For more details, refer to *AN958: Debugging and Programming Interfaces for Custom Designs*.

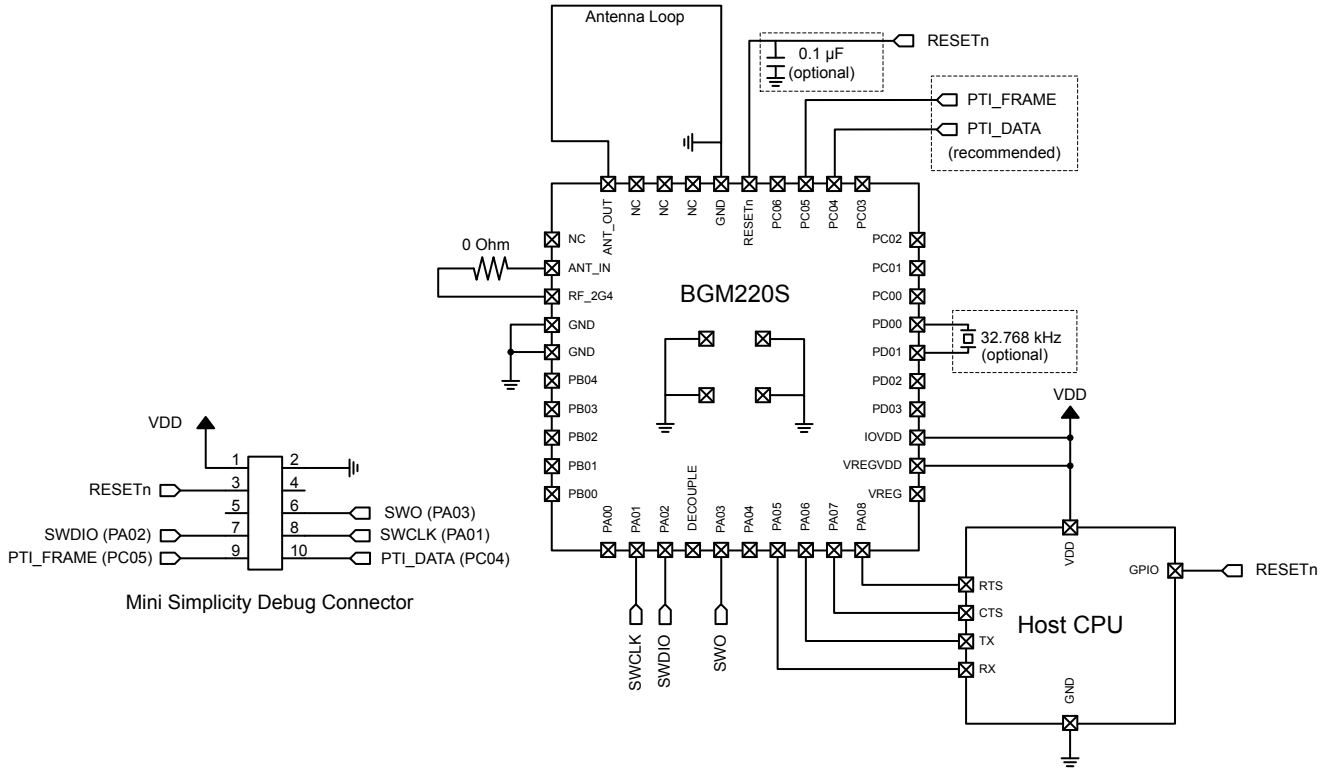

Figure 5.1. UART NCP Configuration

5.2 SoC Application

The BGM220S can be used in a stand-alone SoC configuration without an external host processor. Typical power supply and programming/debug interface connections are shown in the figure below. For more details, refer to *AN958: Debugging and Programming Interfaces for Custom Designs*.

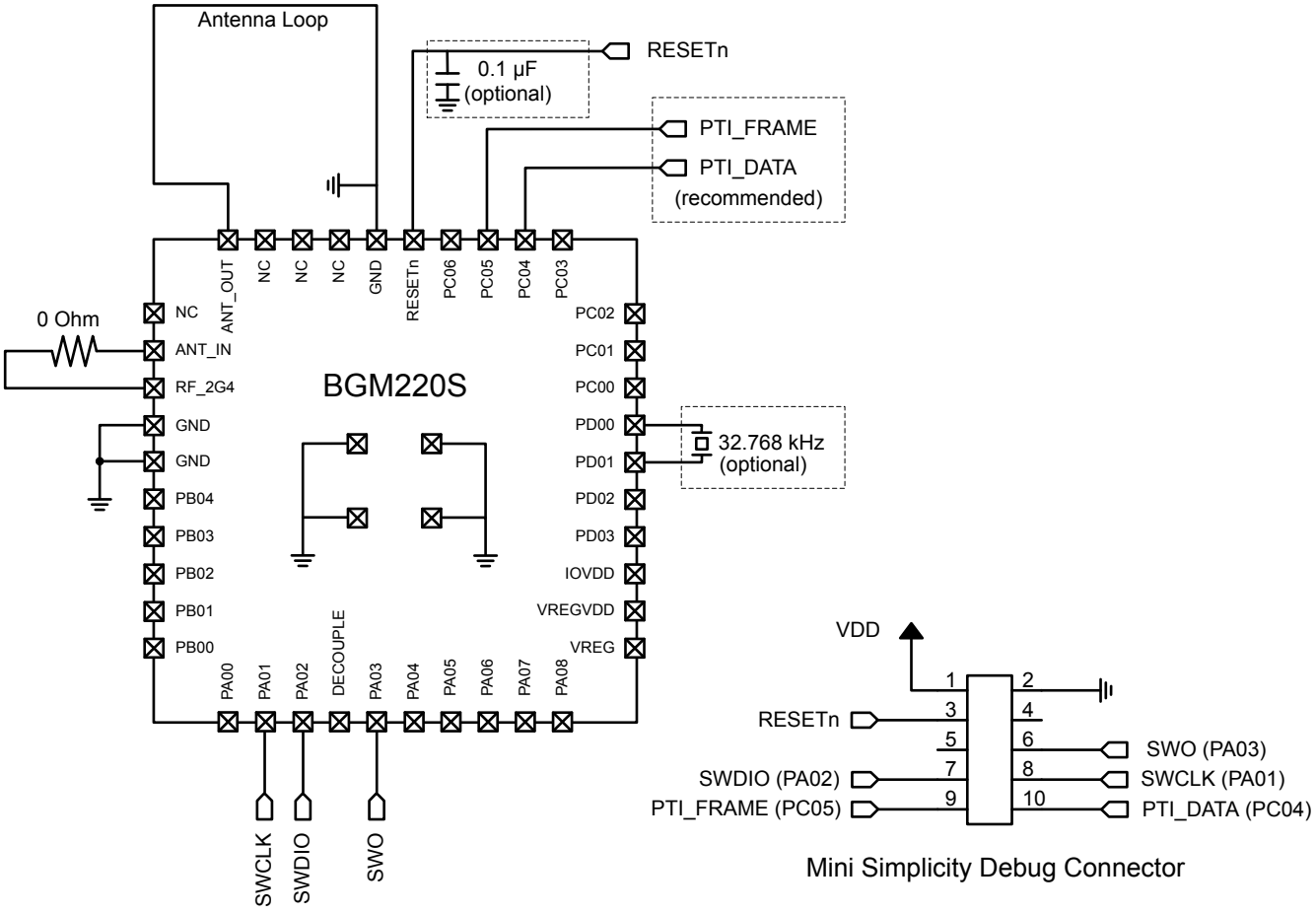

Figure 5.2. Stand-Alone SoC Configuration

6. Pin Definitions

6.1 44-Pin SiP Module Device Pinout

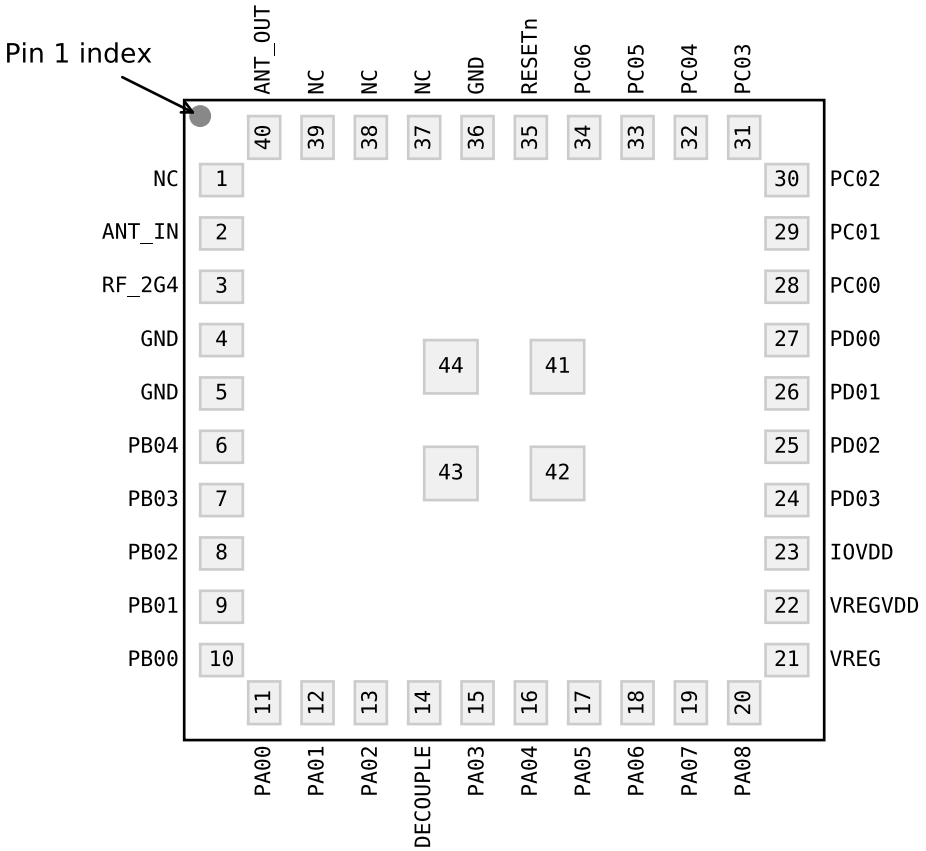

Figure 6.1. 44-Pin SiP Module Device Pinout

The following table provides package pin connections and general descriptions of pin functionality. For detailed information on the supported features for each GPIO pin, see 6.2 Alternate Function Table, 6.3 Analog Peripheral Connectivity, and 6.4 Digital Peripheral Connectivity.

Table 6.1. 44-Pin SiP Module Device Pinout

Pin Name	Pin(s)	Description	Pin Name	Pin(s)	Description
NC	1	Do not connect	ANT_IN	2	Antenna In
RF_2G4	3	2.4 GHz RF input/output	GND	4	Ground
GND	5	Ground	PB04	6	GPIO
PB03	7	GPIO	PB02	8	GPIO
PB01	9	GPIO	PB00	10	GPIO

Pin Name	Pin(s)	Description	Pin Name	Pin(s)	Description
PA00	11	GPIO	PA01	12	GPIO
PA02	13	GPIO	DECOUPLE	14	Decouple output for on-chip voltage regulator. This pin is internally decoupled, and should be left disconnected.
PA03	15	GPIO	PA04	16	GPIO
PA05	17	GPIO	PA06	18	GPIO
PA07	19	GPIO	PA08	20	GPIO
VREG	21	Regulated supply voltage. This pin is internally connected to the SoC DVDD, RFVDD, and PAVDD supply lines. It is not intended to power external circuitry.	VREGVDD	22	Module input power supply. This pin is internally connected to the SoC AVDD and VREGVDD supply lines.
IOVDD	23	I/O power supply	PD03	24	GPIO
PD02	25	GPIO	PD01	26	GPIO
PD00	27	GPIO	PC00	28	GPIO
PC01	29	GPIO	PC02	30	GPIO
PC03	31	GPIO	PC04	32	GPIO
PC05	33	GPIO	PC06	34	GPIO
RESETn	35	Reset Pin. The RESETn pin is internally pulled up to VREG (DVDD).	GND	36	Ground
NC	37	Do not connect	NC	38	Do not connect
NC	39	Do not connect	ANT_OUT	40	Antenna Out
GND	41	Ground	GND	42	Ground
GND	43	Ground	GND	44	Ground

6.2 Alternate Function Table

A wide selection of alternate functionality is available for multiplexing to various pins. The following table shows what functions are available on each device pin.

Table 6.2. GPIO Alternate Function Table

GPIO	Alternate Functions			
PB03	GPIO.EM4WU4			
PB01	GPIO.EM4WU3			
PB00		IADC0.VREFN		
PA00		IADC0.VREFP		
PA01	GPIO.SWCLK			
PA02	GPIO.SWDIO			
PA03	GPIO.SWV GPIO.TDO GPIO.TRACEDATA0			
PA04	GPIO.TDI GPIO.TRACECLK			
PA05	GPIO.EM4WU0			
PD02	GPIO.EM4WU9			
PD01		LFXO.LFXTAL_I LFXO.LF_EXTCLK		
PD00		LFXO.LFXTAL_O		
PC00	GPIO.EM4WU6 GPIO.THMSW_EN			
PC05	GPIO.EM4WU7			

6.3 Analog Peripheral Connectivity

Many analog resources are routable and can be connected to numerous GPIO's. The table below indicates which peripherals are available on each GPIO port. When a differential connection is being used Positive inputs are restricted to the EVEN pins and Negative inputs are restricted to the ODD pins. When a single ended connection is being used positive input is avaliable on all pins. See the device Reference Manual for more details on the ABUS and analog peripherals.

Table 6.3. ABUS Routing Table

Peripheral	Signal	PA		PB		PC		PD	
		EVEN	ODD	EVEN	ODD	EVEN	ODD	EVEN	ODD
IADC0	ANA_NEG	Yes	Yes	Yes	Yes	Yes	Yes	Yes	Yes
	ANA_POS	Yes	Yes	Yes	Yes	Yes	Yes	Yes	Yes

6.4 Digital Peripheral Connectivity

Many digital resources are routable and can be connected to numerous GPIO's. The table below indicates which peripherals are avaliable on each GPIO port.

Table 6.4. DBUS Routing Table

Peripheral.Resource	PORT			
	PA	PB	PC	PD
CMU.CLKIN0			Available	Available
CMU.CLKOUT0			Available	Available
CMU.CLKOUT1			Available	Available
CMU.CLKOUT2	Available	Available		
EUART0.CTS	Available	Available	Available	Available
EUART0.RTS	Available	Available	Available	Available
EUART0.RX	Available	Available	Available	Available
EUART0.TX	Available	Available	Available	Available
FRC.DCLK			Available	Available
FRC.DFRAME			Available	Available
FRC.DOUT			Available	Available
I2C0.SCL	Available	Available	Available	Available
I2C0.SDA	Available	Available	Available	Available
I2C1.SCL			Available	Available
I2C1.SDA			Available	Available
LETIMER0.OUT0	Available	Available		
LETIMER0.OUT1	Available	Available		
MODEM.ANT0	Available	Available	Available	Available
MODEM.ANT1	Available	Available	Available	Available
MODEM.ANT_ROLL_OVER			Available	Available
MODEM.ANT_RR0			Available	Available
MODEM.ANT_RR1			Available	Available
MODEM.ANT_RR2			Available	Available
MODEM.ANT_RR3			Available	Available
MODEM.ANT_RR4			Available	Available
MODEM.ANT_RR5			Available	Available
MODEM.ANT_SW_EN			Available	Available
MODEM.ANT_SW_US			Available	Available
MODEM.ANT_TRIG			Available	Available
MODEM.ANT_TRIG_STOP			Available	Available
MODEM.DCLK	Available	Available		

Peripheral.Resource	PORT			
	PA	PB	PC	PD
MODEM.DIN	Available	Available		
MODEM.DOUT	Available	Available		
PDM.CLK	Available	Available	Available	Available
PDM.DAT0	Available	Available	Available	Available
PDM.DAT1	Available	Available	Available	Available
PRS.ASYNCH0	Available	Available		
PRS.ASYNCH1	Available	Available		
PRS.ASYNCH10			Available	Available
PRS.ASYNCH11			Available	Available
PRS.ASYNCH2	Available	Available		
PRS.ASYNCH3	Available	Available		
PRS.ASYNCH4	Available	Available		
PRS.ASYNCH5	Available	Available		
PRS.ASYNCH6			Available	Available
PRS.ASYNCH7			Available	Available
PRS.ASYNCH8			Available	Available
PRS.ASYNCH9			Available	Available
PRS.SYNCH0	Available	Available	Available	Available
PRS.SYNCH1	Available	Available	Available	Available
PRS.SYNCH2	Available	Available	Available	Available
PRS.SYNCH3	Available	Available	Available	Available
TIMER0.CC0	Available	Available	Available	Available
TIMER0.CC1	Available	Available	Available	Available
TIMER0.CC2	Available	Available	Available	Available
TIMER0.CDTI0	Available	Available	Available	Available
TIMER0.CDTI1	Available	Available	Available	Available
TIMER0.CDTI2	Available	Available	Available	Available
TIMER1.CC0	Available	Available	Available	Available
TIMER1.CC1	Available	Available	Available	Available
TIMER1.CC2	Available	Available	Available	Available
TIMER1.CDTI0	Available	Available	Available	Available
TIMER1.CDTI1	Available	Available	Available	Available
TIMER1.CDTI2	Available	Available	Available	Available
TIMER2.CC0	Available	Available		
TIMER2.CC1	Available	Available		
TIMER2.CC2	Available	Available		

Peripheral.Resource	PORT			
	PA	PB	PC	PD
TIMER2.CDTI0	Available	Available		
TIMER2.CDTI1	Available	Available		
TIMER2.CDTI2	Available	Available		
TIMER3.CC0			Available	Available
TIMER3.CC1			Available	Available
TIMER3.CC2			Available	Available
TIMER3.CDTI0			Available	Available
TIMER3.CDTI1			Available	Available
TIMER3.CDTI2			Available	Available
TIMER4.CC0	Available	Available		
TIMER4.CC1	Available	Available		
TIMER4.CC2	Available	Available		
TIMER4.CDTI0	Available	Available		
TIMER4.CDTI1	Available	Available		
TIMER4.CDTI2	Available	Available		
USART0.CLK	Available	Available	Available	Available
USART0.CS	Available	Available	Available	Available
USART0.CTS	Available	Available	Available	Available
USART0.RTS	Available	Available	Available	Available
USART0.RX	Available	Available	Available	Available
USART0.TX	Available	Available	Available	Available
USART1.CLK	Available	Available		
USART1.CS	Available	Available		
USART1.CTS	Available	Available		
USART1.RTS	Available	Available		
USART1.RX	Available	Available		
USART1.TX	Available	Available		

7. Design Guidelines

7.1 Layout and Placement

For optimal performance of the BGM220S the following guidelines are recommended:

- Place the module 1.50 mm from the edge of the copper “keep-in” area at the middle of the long edge of the application PCB, as illustrated in Figure 7.1 Recommended Layout for BGM220S on page 32.
- Copy the exact antenna design from Figure 7.2 Antenna Layout With Coordinates on page 33 with the values for coordinates A to L given in Table 7.1 Antenna Polygon Coordinates, Referenced to Center of BGM220S on page 33.
- Make a cutout in all lower layers aligned with the right edge and the bottom edge of the antenna as indicated by the yellow box in Figure 7.3 Antenna Clearance in Inner and Bottom Layers on page 34.
- Connect all ground pads directly to a solid ground plane in the top layer.
- Connect RF_2G4 to ANT_IN through a 0-ohm resistor.
  - The 0-ohm gives the ability to test conducted and to evaluate the antenna impedance in the design.
- Place ground vias as close to the ground pads of the BGM220S as possible.
- Place ground vias along the antenna loop right and bottom side.
- Place ground vias along the edges of the application board.
- Do not place plastic or any other dielectric material in contact with the antenna.
  - A minimum clearance of 0.5 mm is advised.
  - Solder mask, conformal coating and other thin dielectric layers are acceptable directly on top of the antenna region.

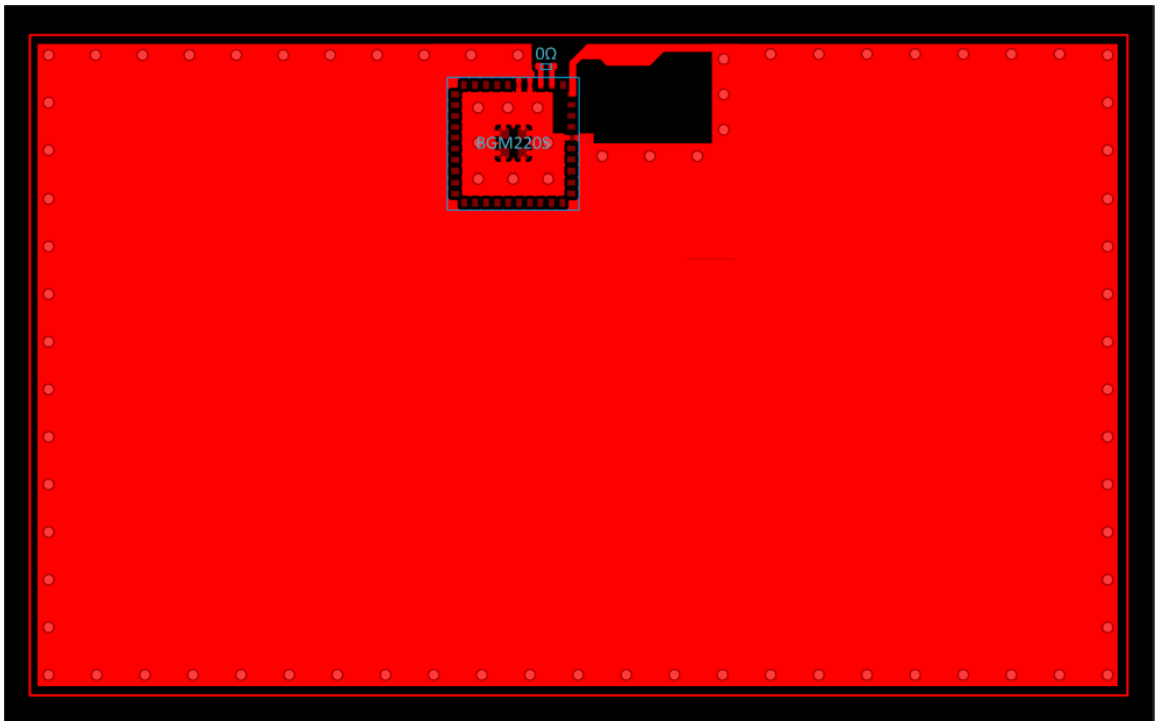

Figure 7.1. Recommended Layout for BGM220S

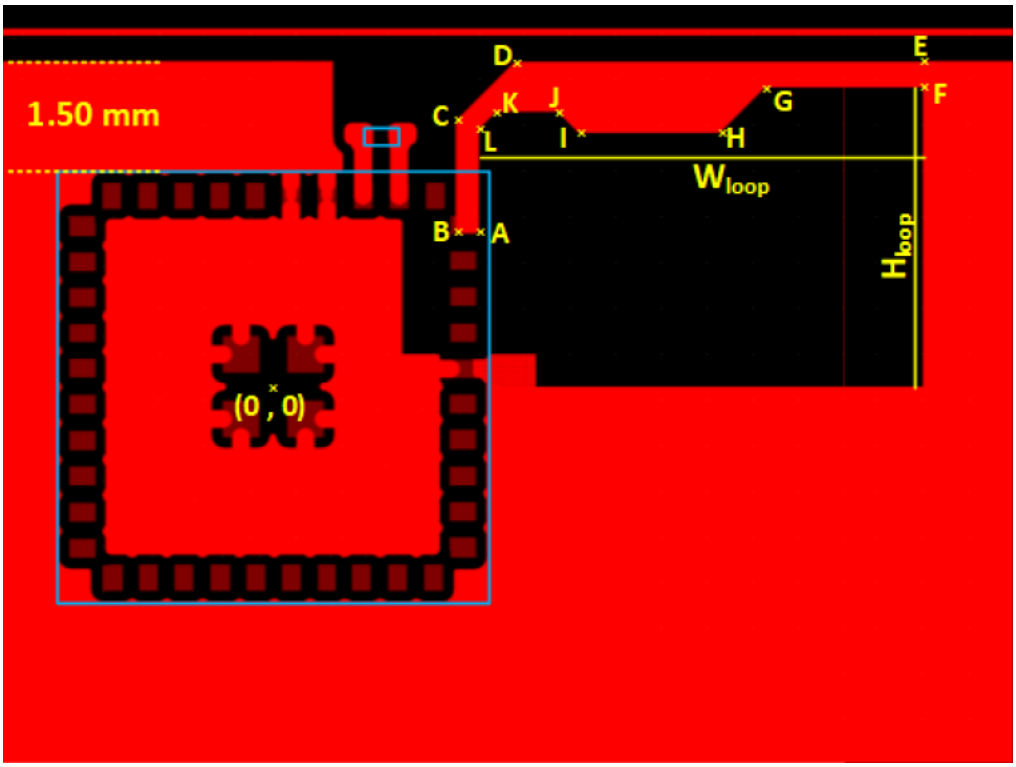

Figure 7.2. Antenna Layout With Coordinates

Table 7.1. Antenna Polygon Coordinates, Referenced to Center of BGM220S

Point	BGM220SC12WGA2	BGM220SC22WGA2 BGM220SC22HNA2
A	(2.87, 2.13)	(2.87, 2.13)
B	(2.54, 2.13)	(2.54, 2.13)
C	(2.54, 3.69)	(2.54, 3.69)
D	(3.36, 4.51)	(3.36, 4.51)
E	(8.85, 4.51)	(7.75, 4.51)
F	(8.85, 4.15)	(7.75, 4.15)
G	(6.84, 4.15)	(6.84, 4.15)
H	(6.21, 3.52)	(6.21, 3.52)
I	(4.26, 3.52)	(4.26, 3.52)
J	(3.97, 3.81)	(3.97, 3.81)
K	(3.10, 3.81)	(3.10, 3.81)
L	(2.87, 3.58)	(2.87, 3.58)
W_{loop}	5.98	4.88
H_{loop}	4.15	4.15

Note:
1. All coordinates and dimensions listed in mm.

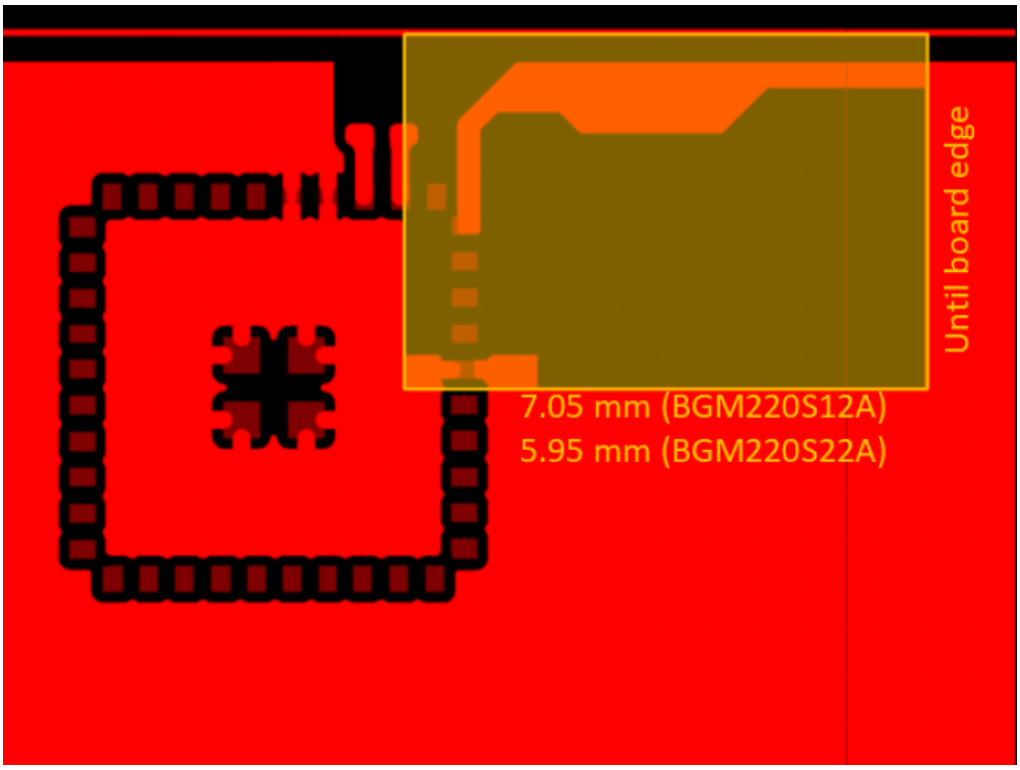

Figure 7.3. Antenna Clearance in Inner and Bottom Layers

7.2 Best Design Practices

The design of a good RF system relies on thoughtful placement and routing of the RF signals. The following guidelines are recommended:

- Place the BGM220S and antenna close to the center of the longest edge of the application board.
- Do not place any circuitry between the board edge and the antenna.
- Make sure to tie all GND planes in the application board together with as many vias as can be fitted.
- Generally ground planes are recommended in all areas of the application board except in the antenna keep-out area shown in Figure 7.3 Antenna Clearance in Inner and Bottom Layers on page 34.
- Open-ended stubs of copper in the outer layer ground planes must be removed if they are more than 5 mm long to avoid radiation of spurious emissions.
- The width of the GND plane to the sides of the BGM220S will impact the efficiency of the on-board chip antenna.
  - To achieve optimal performance, a GND plane width of 50 mm for BGM220S12A or 55 mm for BGM220S22A is recommended as seen on Figure 7.4 Illustration of Recommended Board Width on page 35.
  - See 4.16.1 Antenna Typical Characteristics for reference.

Figure 7.5 Non-Optimal Layout Examples on page 36 illustrates layout scenarios that will lead to severely degraded RF performance for the application board.

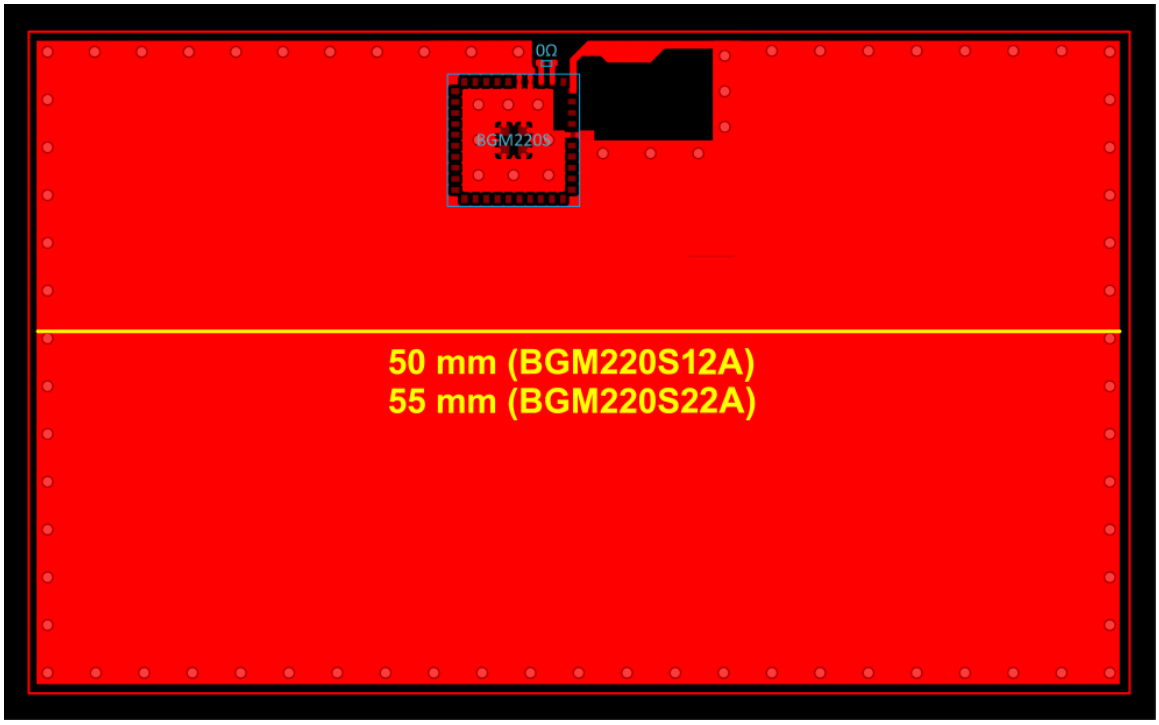

Figure 7.4. Illustration of Recommended Board Width

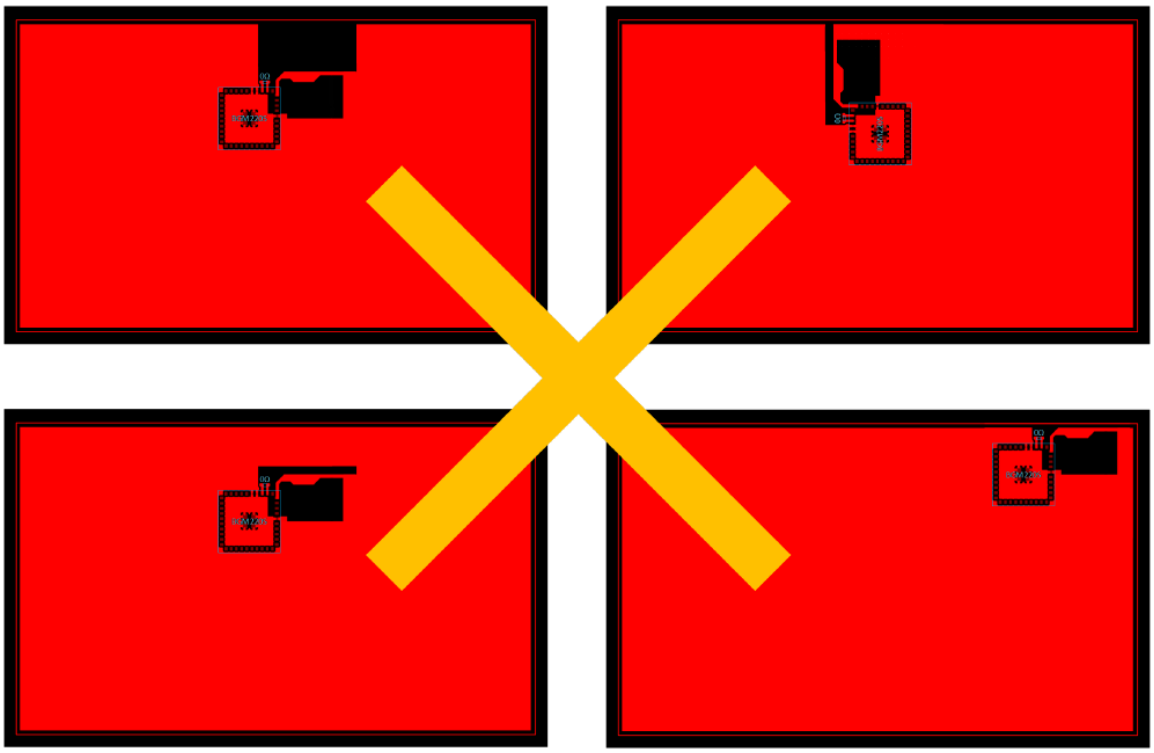

Figure 7.5. Non-Optimal Layout Examples

7.3 Radio Performance vs. Carrier Board Size

For many applications, the carrier board size is determined by the overall form factor or size of the additional circuitry. The recommended carrier board width of 50 mm for the BGM220S12A and 55 mm for the BGM220S22A is thus not always possible in the end-application. If another form factor is required, the antenna performance of the integrated antenna will be compromised but it may still be sufficiently good for providing the required link quality and range of the end-application. Figure 7.6 Efficiency of the Integrated Antenna as Function of the Carrier Board Size for BGM220S12A on page 37 and Figure 7.7 Efficiency of the Integrated Antenna as Function of the Carrier Board Size for BGM220S22A on page 38 show the total efficiency of the integrated antenna for different carrier board sizes. As can be seen the best performance is achieved for the carrier board size of 50 mm x 30 mm for the BGM220S12A and 55 mm x 25 mm for the BGM220S22A, with relatively constant performance for larger boards and rapidly declining performance for smaller boards.

The performance of all the sizes tested will be adequate for more than 15 m line-of-sight range and all of the sizes are thus usable.

WARNING: Any antenna tuning or change of the loop dimensions will void the modular certification of modules with modular certification. In that case, a Permissive Change to the modular approval is required.

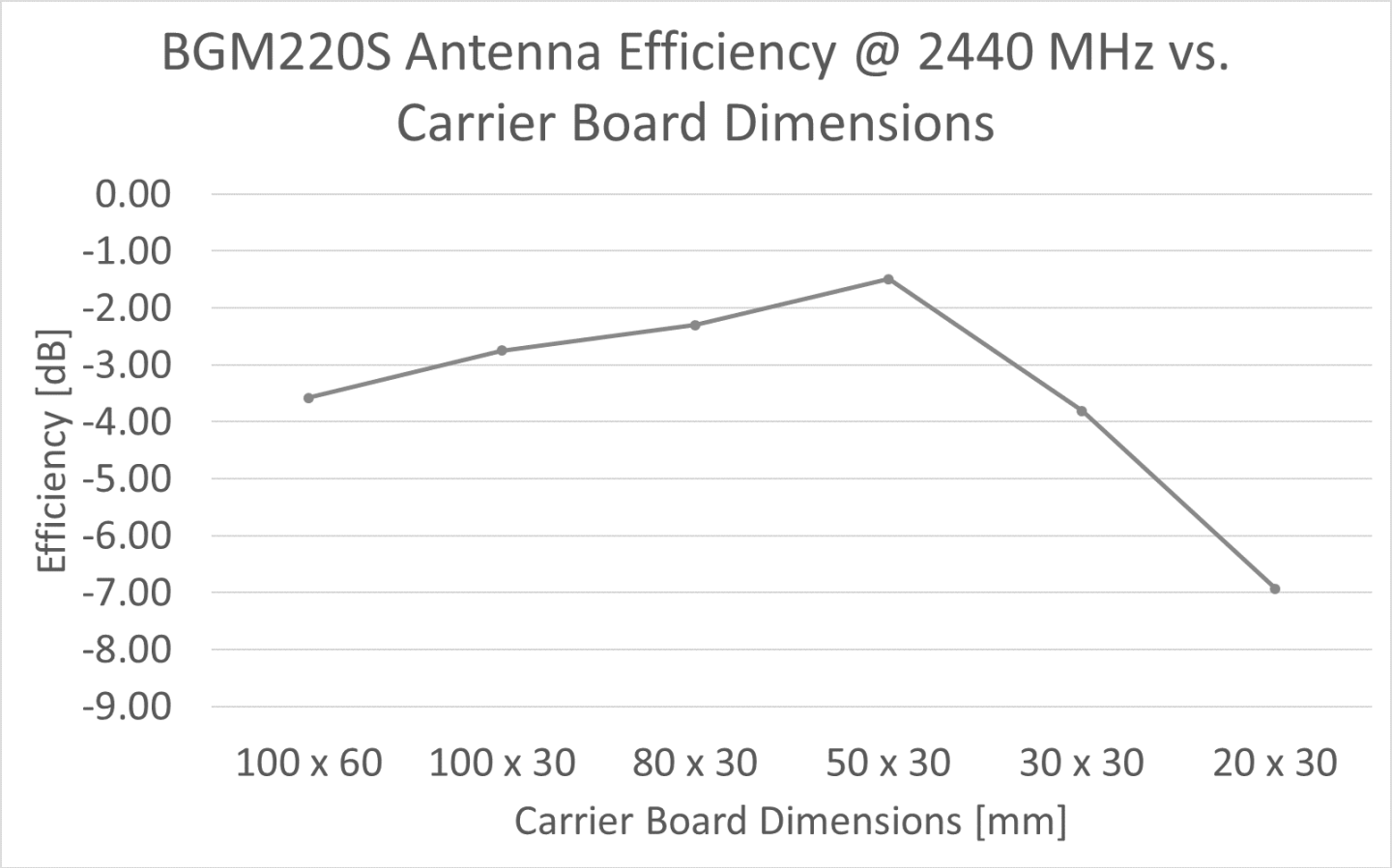

Figure 7.6. Efficiency of the Integrated Antenna as Function of the Carrier Board Size for BGM220S12A

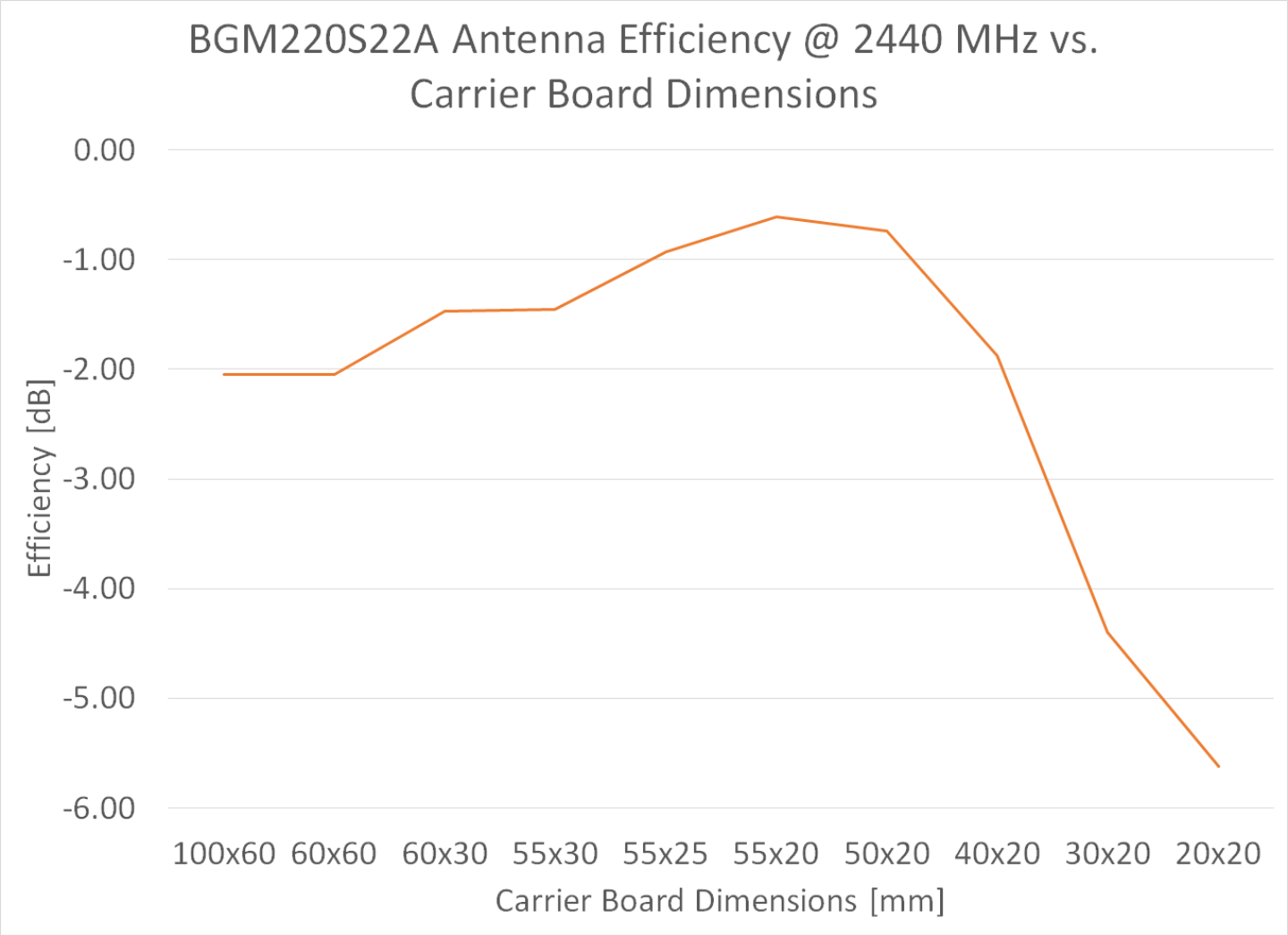

Figure 7.7. Efficiency of the Integrated Antenna as Function of the Carrier Board Size for BGM220S22A

7.4 Proximity to Other Materials

Placing plastic or any other dielectric material directly in contact with the antenna may cause performance degradation. A clearance of minimum 0.5 mm is recommended to avoid excessive detuning of the antenna. Solder mask, conformal coating, and other thin dielectric layers are acceptable directly on top of the antenna region. Any metallic objects in close proximity to the antenna will prevent the antenna from radiating freely. The minimum recommended distance of metallic and/or conductive objects is 10 mm in any direction from the antenna except in the directions of the application PCB ground planes.

7.5 Proximity to Human Body

Placing the module in contact with or very close to the human body will negatively impact antenna efficiency and reduce range. Furthermore, additional certification may be required if the module is used in a wearable device.

8. Package Specifications

8.1 Package Dimensions

The package dimensions are shown in Figure 8.1 Package Dimensions - Full on page 39 and Figure 8.2 Package Dimensions - Detail on page 39.

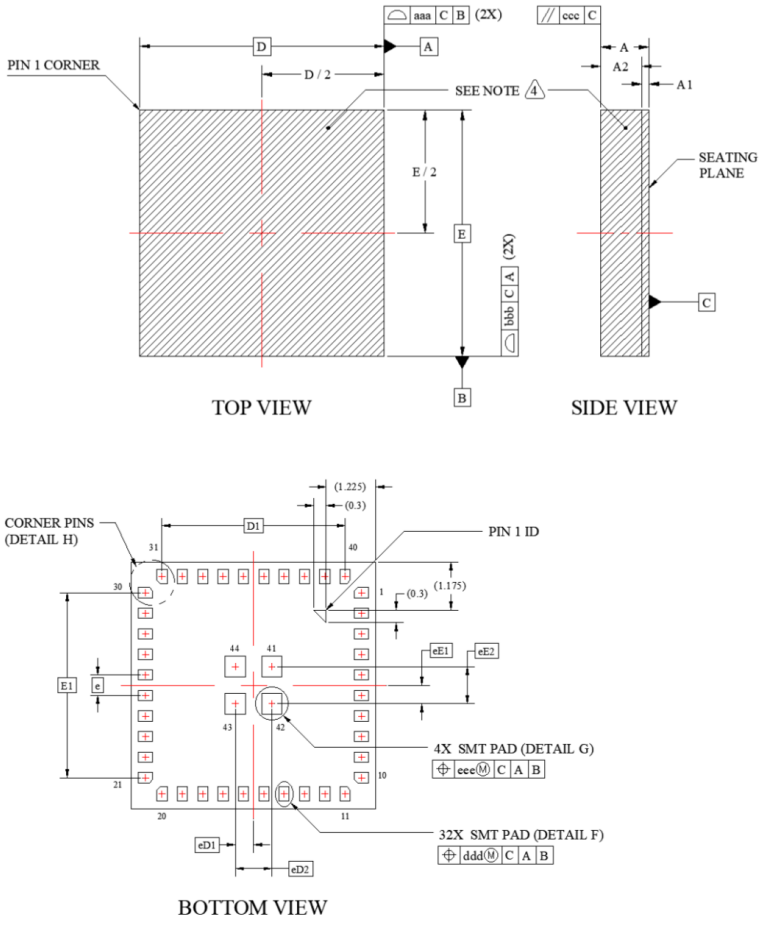

Figure 8.1. Package Dimensions - Full

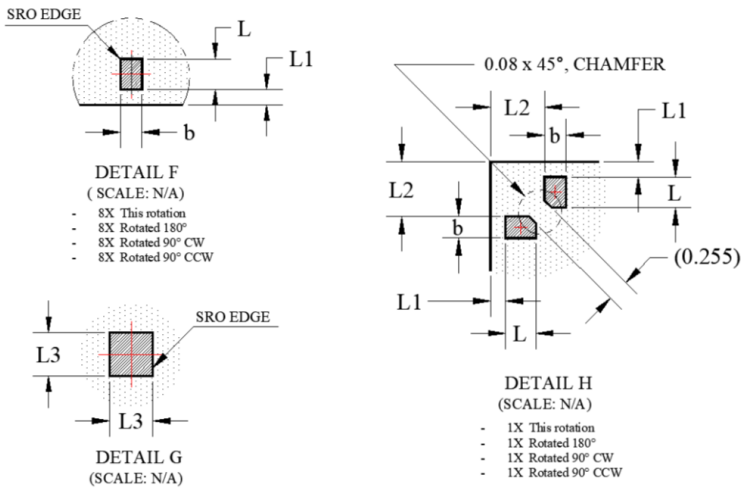

Figure 8.2. Package Dimensions - Detail

Table 8.1. Package Dimensions

Dimension	MIN	NOM	MAX
A	1.080	1.180	1.280
A1	0.140	0.180	0.220
A2	0.950	1.000	1.050
b	0.200	0.250	0.300
D		6.000 BSC	
D1		4.500 BSC	
e		0.500 BSC	
E		6.000 BSC	
E1		4.500 BSC	
L	0.300	0.350	0.400
L1	0.125	0.175	0.225
L2	0.575	0.625	0.675
L3	0.450	0.500	0.550
eD1		0.450 BSC	
eD2		0.900 BSC	
eE1		0.450 BSC	
eE2		0.900 BSC	
aaa		0.100	
bbb		0.100	
ccc		0.100	
ddd		0.100	
eee		0.100	

Note:

1. The dimensions in parenthesis are reference.
2. All dimensions in millimeters (mm).
3. Unless otherwise specified, tolerances are:
   a. Decimal: X.X = +/- 0.1

      X.XX = +/- 0.05

      X.XXX = +/- 0.03

   b. Angular: +/- 0.1 (In Deg)
4. Hatching lines means package shielding area.

8.2 Recommended PCB Land Pattern

The recommended PCB Land Pattern is shown in Figure 8.3 Module Land Pattern on page 41

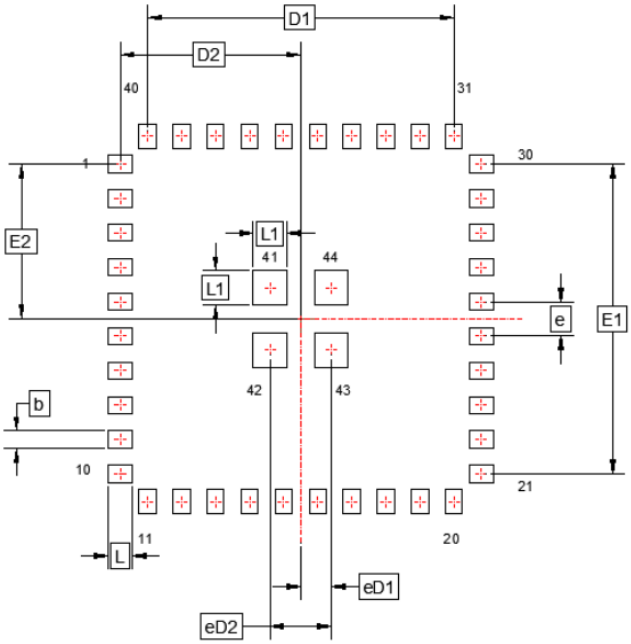

Figure 8.3. Module Land Pattern

Table 8.2. PCB Land Pattern Dimensions

Dimension	Typ (mm)
D1	4.50
D2	2.65
E1	4.50
E2	2.25
eD1	0.45
eD2	0.90
b	0.25
e	0.50
L	0.35
L1	0.50

Note:

1. All feature sizes shown are at Maximum Material Condition (MMC) and a card fabrication tolerance of 0.05mm is assumed.
2. Dimensioning and Tolerancing is per the ANSI Y14.5M-1994 specification.
3. A stainless steel, laser-cut and electro-polished stencil with trapezoidal walls should be used to assure good solder paste release.
4. The stencil thickness should be 0.100 mm (4 mils).
5. The stencil aperture to land pad size recommendation is 80% paste coverage.
6. ***Above notes and stencil design are shared as recommendations only. A customer or user may find it necessary to use different parameters and fine tune their SMT process as required for their application and tooling.***

8.3 Top Marking

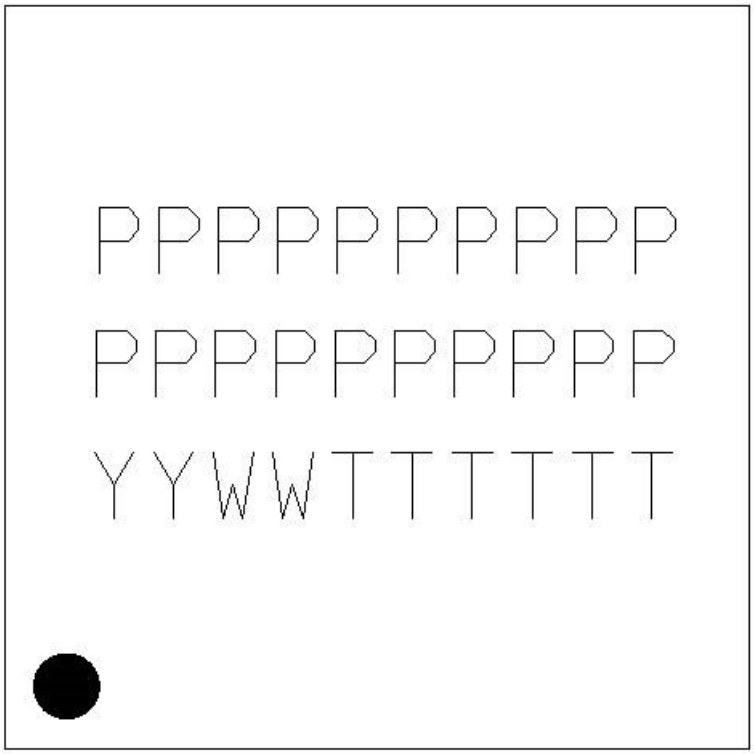

Figure 8.4. BGM220S Top Marking

Table 8.3. Top Marking Definition

OPN	Line 1 Marking	Line 2 Marking	Line 3 Marking
BGM220SC12WGA2	BGM220S12A	SC12WGA2	See note below
BGM220SC22HNA2	BGM220S22A	SC22HNA2	See note below
BGM220SC22WGA2	BGM220S22A	SC22WGA2	See note below
Note: YY = Year. WW = Work Week, TTTTTTT = Trace Code			

9. Soldering Recommendations

It is recommended that final PCB assembly of the BGM220S follows the industry standard as identified by the Institute for Printed Circuits (IPC). This product is assembled in compliance with the J-STD-001 requirements and the guidelines of IPC-AJ-820. Surface mounting of this product by the end user is recommended to follow IPC-A-610 to meet or exceed class 2 requirements.

CLASS 1 General Electronic Products

Includes products suitable for applications where the major requirement is function of the completed assembly.

CLASS 2 Dedicated Service Electronic Products

Includes products where continued performance and extended life is required, and for which uninterrupted service is desired but not critical. Typically the end-use environment would not cause failures.

CLASS 3 High Performance/Harsh Environment Electronic Products

Includes products where continued high performance or performance-on-demand is critical, equipment downtime cannot be tolerated, end-use environment may be uncommonly harsh, and the equipment must function when required, such as life support or other critical systems.

Note: General SMT application notes are provided in the AN1223 document.

10. Tape and Reel

BGM220S modules are delivered to the customer in tray (490 pcs / tray) or reel (2500 pcs / reel) packaging with the dimensions below. All dimensions are given in mm unless otherwise indicated.

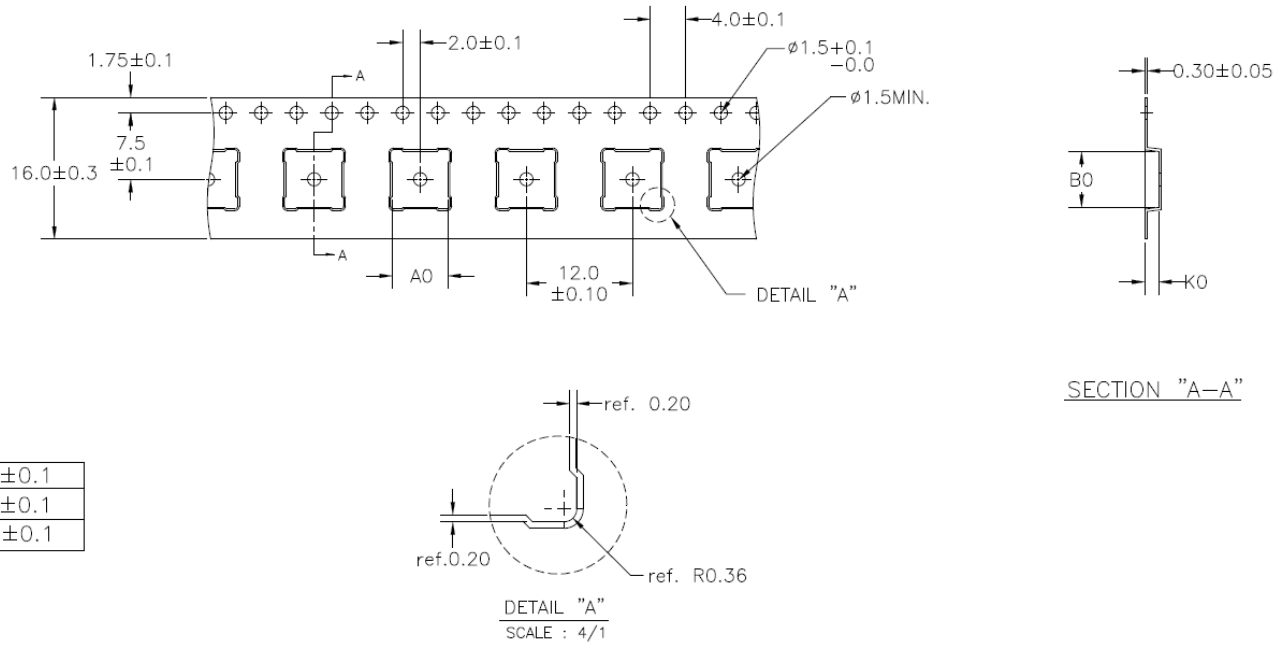

A0	6.30mm±0.1
B0	6.30mm±0.1
K0	1.60mm±0.1

Figure 10.1. Carrier Tape Dimensions

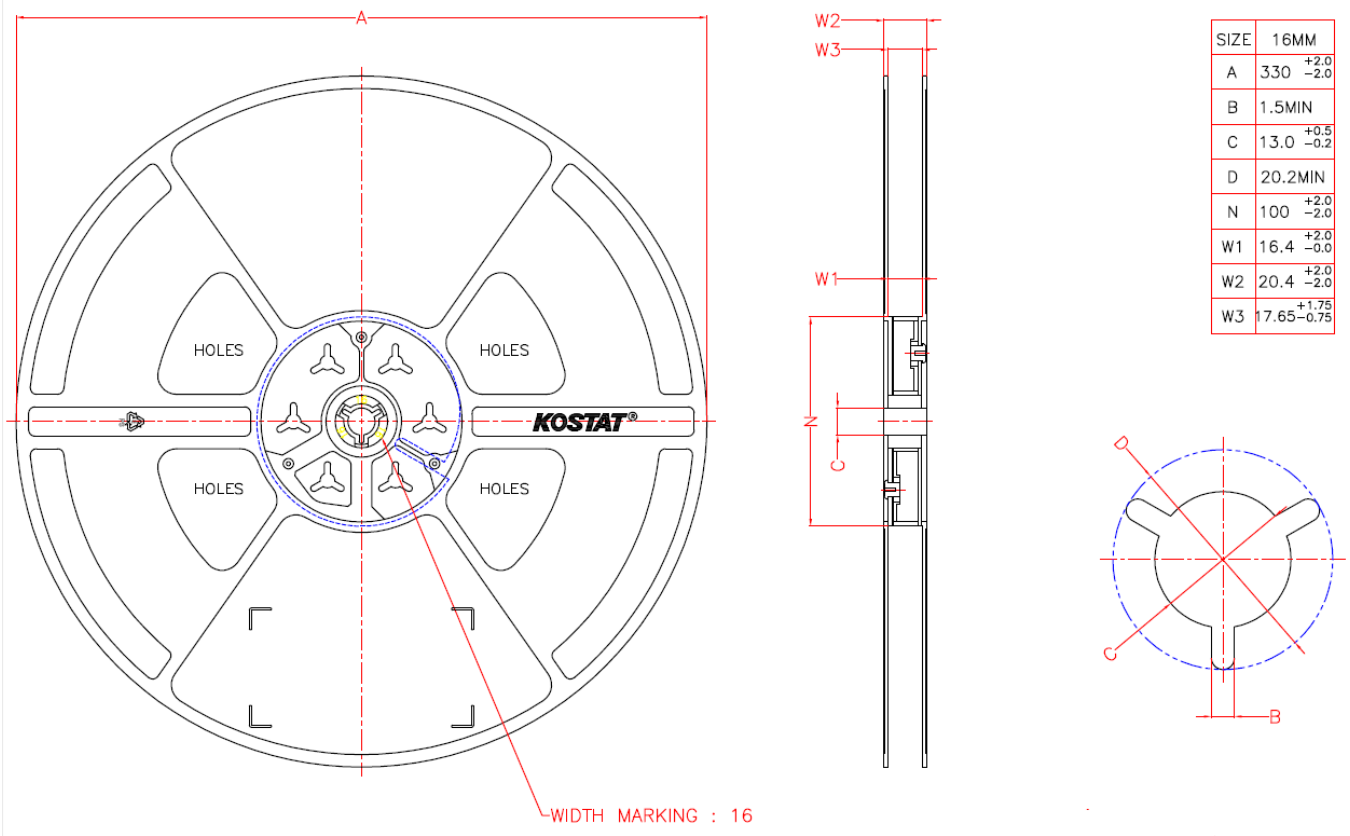

SIZE	16MM
A	330 +2.0 −2.0
B	1.5MIN
C	13.0 +0.5 −0.2
D	20.2MIN
N	100 +2.0 −2.0
W1	16.4 +2.0 −0.0
W2	20.4 +2.0 −2.0
W3	17.65 +1.75 −0.75

Figure 10.2. Reel Dimensions

11. Certifications

This section details the regulatory certification status of BGM220S modules in various regions. BGM220S modules are also referred to by their formal model name of BGM220S12A/BGM220S22A.

The address for the module manufacturer and certification applicant is:

SILICON LABORATORIES FINLAND OY
Alberga Business Park, Bertel Jungin aukio 3,
02600 Espoo, Finland

11.1 Regulatory Certifications

11.1.1 Qualified Antennas

BGM220S modules have been tested and certified both with the on-board antennas and with external antennas attached to the RF pin (RF_2G4). Performance characteristics for the integral antennas are presented in Table 3.1 Antenna Efficiency and Peak Gain (BGM220S12A) on page 7, Table 3.2 Antenna Efficiency and Peak Gain (BGM220S22A) on page 7 and 4.16.1 Antenna Typical Characteristics. Details for the external qualified reference antennas are summarized in the table below.

Table 11.1. Qualified External Antennas for BGM220S

Model	Antenna Type	Maximum Gain	Impedance
BGM220S12A	Connectorized Coaxial Dipole	3.2 dBi	50 Ω
BGM220S22A	Connectorized Coaxial Dipole	2.8 dBi	50 Ω

Any external antenna of the same general type and of equal or less directional gain as listed in the above table, and having similar in-band and out-of-band characteristics, can be used in the regulatory areas that have modular radio approvals, such as USA and Canada, as long as spot-check testing is performed to verify that no performance changes compromising compliance have been introduced. In the particular FCC case, in order to comply with e-CFR Title 47, Part 15, Subpart C, Section 15.203 the module integrator using an external antenna must ensure it has a unique connector or it is undetachable. In countries applying the ETSI standards, like the EU countries, the radiated emissions are always tested with the end-product and the antenna type is not critical, but antennas with higher gain may violate some of the regulatory limits.

When using instead an external antenna of a different type (such as a chip antenna, a PCB trace antenna or a patch) or having non-similar in-band and out-of-band characteristics, but still with a gain less than or equal to the maximum gain listed in the table above, it can be added as a permissive change to the existing grant/certificate. In most of these cases, some radiated emission testing is demanded, but no modular or end-product re-certification is required.

On the other hand, all products with antennas having more gain than the maximum gain listed in the table above are very likely to require a full new end-product certification. Since the exact permissive change procedure is chosen on a case by case basis, please consult your test house and/or a certification body for understanding the correct approach based on your unique design. You might also want or need to get in touch with Silicon Labs for any authorization letter that your certification body might ask for.

11.1.2 EU and UK - CE and UKCA

The BGM220S modules have been tested against the relevant harmonized/designated standards and are in conformity with the essential requirements and other relevant requirements of the Radio Equipment Directive (RED) (2014/53/EU) and of the Radio Equipment Regulations (RER) (S.I. 2017/1206).
Please notice that every end-product integrating a BGM220S module will need to perform the radio EMC tests on the whole assembly, according to the ETSI 301 489-x relevant standards.

Furthermore, it is ultimately the responsibility of the manufacturer to ensure the compliance of the end-product as a whole. The specific product assembly is likely to have an impact to RF radiated characteristics, when compared to the bare module. Hence, manufacturers should carefully consider RF radiated testing with the final product assembly, especially taking into account the gain of the external antenna if any, and the possible deviations in the PSD, EIRP and spurious emissions measurements, as defined in the ETSI 300 328 standard.

The modules are entitled to carry the CE and UKCA Marks, and a formal Declaration of Conformity (DoC) is available at the product web page which is reachable starting from https://www.silabs.com/.

11.1.3 USA - FCC

This device complies with FCC's e-CFR Title 47, Part 15, Subpart C, Section 15.247 (and related relevant parts of the ANSI C63.10.2013 standard) when operating with the embedded antenna or with the antenna type(s) listed in 11.1.1 Qualified Antennas. Operation is subject to the following two conditions:

1. This device may not cause harmful interference, and
2. This device must accept any interference received, including interference that may cause undesirable operation.

Any changes or modifications not expressly approved by Silicon Labs could void the user's authority to operate the equipment.

FCC RF Radiation Exposure Statement

This equipment complies with FCC radiation exposure limits set forth for an uncontrolled environment. End users must follow the specific operating instructions for satisfying RF exposure compliance.

This transmitter meets the Mobile requirements at a distance of 20 cm and above from the human body, in accordance to the limit(s) exposed in the RF Exposure Analysis.

This transmitter also meets the Portable requirements at distances equal or above those listed for convenience in Table 11.2 Minimum Separation Distances for SAR Evaluation Exemption (BGM220S12A) on page 52 and Table 11.3 Minimum Separation Distances for SAR Evaluation Exemption (BGM220S22A) on page 52.

This transmitter must not be co-located or operating in conjunction with any other antenna or transmitter except in accordance with FCC multi-transmitter product procedures.

OEM Responsibilities to comply with FCC Regulations

This module has been tested for compliance to FCC Part 15.

OEM integrators are responsible for testing their end-product for any additional compliance requirements needed with this module installed (for example, digital device emissions, PC peripheral requirements, etc.). Additionally, investigative measurements and spot checking are strongly recommended to verify that the full system compliance is maintained when the module is integrated, in accordance to the "Host Product Testing Guidance" in FCC's KDB 996369 D04 Module Integration Guide V01.

- **General Considerations**

  This transmitter module is tested as a subsystem and its certification does not cover the FCC Part 15 Subpart B (unintentional radiator) rule requirement, which is applicable to the final host. The final host will need to be assessed for compliance to this portion of rule requirements, if applicable.

- **Manual Information to the End User**

  The OEM integrator has to be aware not to provide information to the end user regarding how to install or remove this RF module, or how to change RF related parameters, in the user's manual of the end product which integrates this module.

  The end user manual shall include all required regulatory information/warnings as shown in this manual.

- **OEM / Host Manufacturer Responsibilities**

  OEM/Host manufacturers are ultimately responsible for the compliance of the host system.

  The BGM220S12A has a limited single-modular transmitter approval due to the radio portion of the module not being contained in its own RF shielding. Consequently, each new host will require a reassessment of radiated spurious emissions and a Class I Permissive Change to the grant. The final product must be reassessed against all the essential requirements of the FCC rule such as FCC Part 15 Subpart B before it can be placed on the US market. This includes reassessing the transmitter module for compliance with the Radio and EMF essential requirements of the FCC rules. This module must not be incorporated into any other radio device or system without retesting for compliance as multi-radio and combined equipment.

  The BGM220S22A is a shielded design, and comes with full modular approval.

Separation

- To meet the SAR exemption for portable conditions, the minimum separation distance indicated in

  Table 11.2 Minimum Separation Distances for SAR Evaluation Exemption (BGM220S12A) on page 52 and Table 11.3 Minimum Separation Distances for SAR Evaluation Exemption (BGM220S22A) on page 52 must be maintained between the human body and the radiator (antenna) at all times.
- This transmitter module is tested in a standalone mobile RF exposure condition, and in case of any co-located radio transmitter being allowed to transmit simultaneously, or in case of portable use at closer distances from the human body than those allowing the exceptions rules to be applied, a separate additional SAR evaluation will be required, ultimately leading to a Class II Permissive Change, or more rarely to a new grant.
- **Important Note:** In the event that these conditions cannot be met, the final product will have to undergo additional testing to evaluate the RF exposure in order for the FCC authorization to remain valid, and a permissive change will have to be applied. The evaluation (SAR) is in the responsibility of the end-product's manufacturer, as well as the permissive change that can be carried out with the help of the customer's own Telecommunication Certification Body as the grant holder's agent.

End Product Labeling

BGM220S modules are not labeled with their own FCC ID due to their size. Instead, the packaging label contains the FCC ID. In all cases when the FCC ID is not visible when the module is installed inside another device, then the outside of the device into which the module is installed must also display a label referring to the enclosed module. In that case, the final end product must be labeled in a visible area with the following:

For BGM220S12A

"Contains Transmitter Module FCC ID: QOQ-BGM220S"

Or

"Contains FCC ID: QOQ-BGM220S"

For BGM220S22A

"Contains Transmitter Module FCC ID: QOQ-BGM220S2"

Or

"Contains FCC ID: QOQ-BGM220S2"

Final note: As long as all the conditions in this and all the above sections are met, further RF testing of the transmitter with full modular approval is not required. However, OEMs are still supposed to follow the good practice and the FCC recommendation to ensure the compliance of the host by spot checking.

Nevertheless, the OEM integrator is still responsible for testing their end-product for any additional compliance requirements which might be mandatory with this module installed.

Class B Device Notice - BGM220S22A Only

Note: This equipment has been tested and found to comply with the limits for a Class B digital device, pursuant to part 15 of the FCC Rules. These limits are designed to provide reasonable protection against harmful interference in a residential installation. This equipment generates, uses, and can radiate radio frequency energy and, if not installed and used in accordance with the instructions, may cause harmful interference to radio communications. However, there is no guarantee that interference will not occur in a particular installation. If this equipment does cause harmful interference to radio or television reception, which can be determined by turning the equipment off and on, the user is encouraged to try to correct the interference by one or more of the following measures:

- Reorient or relocate the receiving antenna.
- Increase the separation between the equipment and receiver.
- Connect the equipment into an outlet on a circuit different from that to which the receiver is connected.
- Consult the dealer or an experienced radio / TV technician for help.

11.1.4 ISED Canada

ISED

This radio transmitter (IC: 5123A-BGM220S for the BGM220S12A and IC: 5123A-BGM220S2 for the BGM220S22A) has been approved by *Innovation, Science and Economic Development Canada (ISED Canada, formerly Industry Canada*) to operate with the embedded antenna and with the antenna type(s) listed in 11.1.1 Qualified Antennas, with the maximum permissible gain indicated. Antenna types not included in this list, having a gain greater than the maximum gain listed, are strictly prohibited for use with this device.

This device complies with ISED's license-exempt RSS standards. Operation is subject to the following two conditions:

1. This device may not cause interference; and
2. This device must accept any interference, including interference that may cause undesired operation of the device

RF Exposure Statement

Exception from routine SAR evaluation limits are given in RSS-102 Issue 5.

For the Portable use case, RF exposure or SAR evaluation is not required in all cases, at any distance from the human body, except when the BGM220S22A is used at full power with the external reference dipole antenna, in which case the separation distance from the human body must be of 13 mm or more for the exemption.

For more details, refer to the values stated in Table 11.2 Minimum Separation Distances for SAR Evaluation Exemption (BGM220S12A) on page 52 and Table 11.3 Minimum Separation Distances for SAR Evaluation Exemption (BGM220S22A) on page 52: if the separation distances from the human body are less than the distances mentioned in the tables, then the OEM integrator is responsible for evaluating the SAR.

The module meets the requirements for Mobile use cases when the minimum separation distance from the human body is 20 cm or greater, in accordance to the limit(s) exposed in the RF Exposure Analysis.

OEM Responsibilities to comply with IC Regulations

The module has been certified for integration into products only by OEM integrators under the following conditions:

- The antenna must be installed such that a minimum separation distance as stated above is maintained between the radiator (antenna) and all persons at all times.
- The transmitter module must not be co-located or operating in conjunction with any other antenna or transmitter.

Important Note: In the event that these conditions cannot be met, the final product will have to undergo additional testing to evaluate the RF exposure in order for the ISED authorization to remain valid, and a permissive change will have to be applied with the help of the customer's own Telecommunication Certification Body typically acting as the certificate holder's agent.

In the case of the BGM220S12A, this variant has a limited approval due to the radio portion of the module not being contained in its own RF shielding: consequently, each new host will require a reassessment of the radiated spurious emissions, and the ISED will have to be notified with a Class IV Permissive Change.

In the case of the BGM220S22A, this variant is a shielded design, and consequently comes with a full modular approval.

End Product Labeling

The BGM220S modules are not labeled with their own IC ID due to their size. Instead, the packaging label contains the IC ID. In all cases when the IC ID is not visible when the module is installed inside another device, then the outside of the device into which the module is installed must also display a label referring to the enclosed module. In that case, the final end product must be labeled in a visible area with the following:

For BGM220S12A

"**Contains Transmitter Module IC: 5123A-BGM220S** "

or

"**Contains IC: 5123A-BGM220S"**

For BGM220S22A

"**Contains Transmitter Module IC: 5123A-BGM220S2** "

or

"**Contains IC: 5123A-BGM220S2"**

The OEM integrator has to be aware not to provide information to the end user regarding how to install or remove this RF module or change RF related parameters in the user manual of the end product.

Final note: As long as all the conditions above are met, further RF testing of the transmitter with full modular approval is not required. However, the OEM integrator is still responsible for testing their end-product for any additional compliance requirements required with this module installed (for example, digital device emissions, PC peripheral requirements, etc.).

CAN ICES-003 (B) - BGM220S22A Only

This Class B digital apparatus complies with Canadian ICES-003.

ISEDC (Français)

Le présent émetteur radio (IC: 5123A-BGM220S pour le BGM220S12A and IC: 5123A-BGM220S2 pour le BGM220S22A) a été approuvé par Innovation, Sciences et Développement Économique Canada (ISED Canada, anciennement Industrie Canada) pour fonctionner avec l'antenne intégrée et le ou les types d'antenne énumérés à la section 11.1.1 Qualified Antennas, avec le gain maximal admissible indiqué. Les types d'antenne non inclus dans cette liste, ayant un gainsupérieur au gain maximal indiqué, sont strictement interdits d'utilisation avec cet appareil. .

Ce composant est conforme aux normes RSS, exonérées de licence d'ISED. Son mode de fonctionnement est soumis aux deux conditions suivantes:

1. Ce composant ne doit pas générer d'interférences.
2. Ce composant doit pouvoir être soumis à tout type de perturbation y compris celle pouvant nuire à son bon fonctionnement.

Déclaration d'exposition RF

L'exception tirée des limites courantes d'évaluation SAR est donnée dans le document RSS-102 Issue 5.

Pour le cas d'utilisation Portable, l'exposition RF ou l'évaluation SAR n'est pas nécessaire dans tous les cas, à n'importe quelle distance du corps humain, sauf lorsque le BGM220S22A est utilisé à pleine puissance avec l'antenne dipôle de référence externe, auquel cas la distance de séparation du le corps humain doit être de 13 mm ou plus pour l'exemption.

Pour plus de détails, reportez-vous aux valeurs indiquées dans Table 11.2 Minimum Separation Distances for SAR Evaluation Exemption (BGM220S12A) on page 52 et Table 11.3 Minimum Separation Distances for SAR Evaluation Exemption (BGM220S22A) on page 52: si les distances de séparation du corps humain sont inférieures aux distances mentionnées dans les tableaux, alors l'intégrateur OEM est responsable de l'évaluation du SAR.

Le module répond aux exigences des cas d'utilisation mobile lorsque la distance de séparation minimale du corps humain est de 20 cm ou plus, conformément aux limites exposées dans l'analyse d'exposition RF.

Responsabilités des OEM pour une mise en conformité avec le Règlement du Circuit Intégré

Le module a été approuvé pour l'intégration dans des produits finaux exclusivement réalisés par des OEM sous les conditions suivantes:

- L'antenne doit être installée de sorte qu'une distance de séparation minimale indiquée ci-dessus soit maintenue entre le radiateur (antenne) et toutes les personnes avoisinante, ce à tout moment.
- Le module émetteur ne doit pas être localisé ou fonctionner avec une autre antenne ou un autre transmetteur que celle indiquée plus haut.

Tant que les deux conditions ci-dessus sont respectées, il n'est pas nécessaire de tester ce transmetteur de façon plus poussée. Cependant, il incombe à l'intégrateur OEM de s'assurer de la bonne conformité du produit fini avec les autres normes auxquelles il pourrait être soumis de fait de l'utilisation de ce module (par exemple, les émissions des périphériques numériques, les exigences de périphériques PC, etc.).

Remarque Importante: Dans le cas où ces conditions ne peuvent être satisfaites (pour certaines configurations ou co-implantation avec un autre émetteur), l'autorisation ISED n'est plus considérée comme valide et le numéro d'identification ID IC ne peut pas être apposé sur le produit final. Dans ces circonstances, l'intégrateur OEM sera responsable de la réévaluation du produit final (y compris le transmetteur) et de l'obtention d'une autorisation ISED distincte.

Dans le cas du BGM220S12A, l'approbation de cette variante est limitée car la partie radio du module n'est pas incluse dans son propre blindage RF: par conséquent, chaque nouvel hôte est requis dans tous les cas pour réévaluer les émissions rayonnées et le bureau doit être informé par un C4PC.

Dans le cas du BGM220S22A, cette variante est une conception blindée et est par conséquent livrée avec une approbation modulaire complète.

Étiquetage des produits finis

Les modules BGM220S ne sont pas étiquetés avec leur propre ID IC en raison de leur taille. Au lieu de cela, l'étiquette d'emballage contient l'ID IC. Dans tous les cas, lorsque l'ID IC n'est pas visible lorsque le module est intégré au sein d'un autre produit, cet autre produit dans lequel le module est installé devra porter une étiquette faisant apparaitre les référence du module intégré. Dans un tel cas, sur le produit final doit se trouver une étiquette aisément lisible sur laquelle figurent les informations suivantes:

Pour le BGM220S12A

"**Contient le module transmetteur: 5123A-BGM220S** "

or

"**Contient le circuit: 5123A-BGM220S"**

Pour le BGM220S12A

"**Contient le module transmetteur: 5123A-BGM220S2** "

or

"**Contient le circuit: 5123A-BGM220S2"**

Note finale: L'intégrateur OEM doit être conscient qu'il ne doit pas fournir, dans le manuel d'utilisation, d'informations relatives à la façon d'installer ou de d'enlever ce module RF ainsi que sur la procédure à suivre pour modifier les paramètres liés à la radio.

CAN ICES-003 (B) - BGM220S22A uniquement

Cet appareil numérique de classe B est conforme à la norme canadienne ICES-003.

11.1.5 Proximity to Human Body

When using the BGM220S modules in an application where the radio is located close to the human body, the human RF exposure must be taken into account. FCC, ISED, and CE all have different standards and rules for evaluating the RF exposure. In particular, each regulator has different requirements when it comes to the exemption from having to perform RF exposure and SAR (Specific Absorption Rate) measurements, and the minimum separation distances between the module and human body varies accordingly. The properties of the BGM220S modules allows for the minimum separation distances detailed in the tables below for SAR evaluation exemption in portable use cases (less than 20 cm from human body). The module is approved for the Mobile use case (more than 20 cm) without any need for RF Exposure evaluation.

Table 11.2. Minimum Separation Distances for SAR Evaluation Exemption (BGM220S12A)

Certification	BGM220S12A
FCC	0 mm
ISED	0 mm
CE	The RF exposure must always be evaluated using the end-product when transmitting with power levels higher than 20 mW (13 dBm).

Table 11.3. Minimum Separation Distances for SAR Evaluation Exemption (BGM220S22A)

Certification	BGM220S22A
FCC	0 mm
ISED	13 mm with the reference external antenna 12 mm for integral antenna
CE	The RF exposure must always be evaluated using the end-product when transmitting with power levels higher than 20 mW (13 dBm).

For FCC and ISED, using the module in end-products where the separation distance from the human body is smaller than that listed above is allowed but requires evaluation of the RF exposure in the final assembly and applying for a *Class 2 Permissive Change* or *Change of ID* to be applied to the existing FCC/ISED approvals of the module. For CE, RF exposure must be evaluated using the end-product in all cases when transmitting at more than the power level indicated in the table.

Note: Placing the module in touch or very close to the human body will have a negative impact on the efficiency of the antenna thus a reduced range is to be expected.

11.1.6 Japan - MIC

The BGM22S12A are certified in Japan with certification number 203-JN1080.

The BGM22S22A are certified in Japan with certification number 209-J00429.

It is the end-product manufacturer's responsibility to ensure that the module is configured to meet the limits documented in the formal certification test report available at https://www.silabs.com/. If needed, refer to the API reference manual(s) to learn how to configure the maximum RF TX power for the normal operations.

Since September 1, 2014 it is allowed (and highly recommended) that a manufacturer who integrates a radio module in their host equipment places the certification mark and certification number on the outside of the host equipment. This combination of mark and number, and their relative placement, is depicted in figure 11.1, and depending on the size of the module it might also appear on the top shield markings of the radio module. The certification mark and certification number must be placed close to the text in the Japanese language which is provided below. This change in the Radio Law has been made in order to enable users of the combination of host and radio module to verify if they are actually using a radio device which is approved for use in Japan

Certification Text to be Placed on the Outside Surface of the Host Equipment:

当該機器には電波法に基づく、技術基準適合証明等を受けた特定無線設備を装着している。

Translation of the text:

“This equipment contains specified radio equipment that has been certified to the Technical Regulation Conformity Certification under the Radio Law.”

The "Giteki" marking shown in the figures below must be affixed to an easily noticeable section of the specified radio equipment.

Note that additional information may be required if the device is also subject to a telecom approval.

Figure 11.1. GITEKI Mark and ID (BGM220S12A)

Figure 11.2. GITEKI Mark and ID (BGM220S22A)

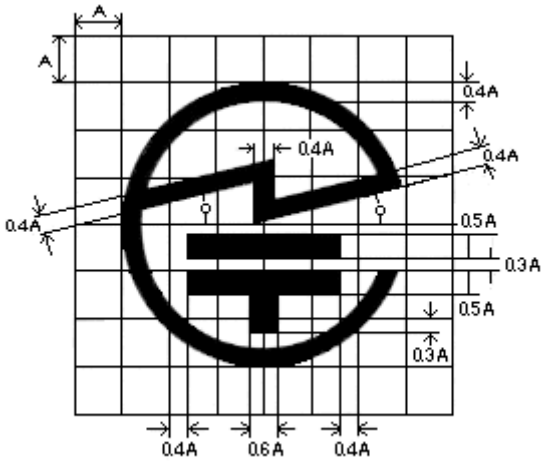

Figure 11.3. GITEKI Mark

11.1.7 South Korea - KC

The BGM220S22A modules have a RF registration for import and use in South-Korea.

Registration number is KC ID: R-R-BGT-BGM220S2

When integrating this RF-certified module, an end-product is exempted from doing the RF emission testing, as long as the recommended design guidance is followed, and the approved antennas are used. In cases when the custom SRD protocol is additionally enabled and used, the registration is valid only with the integral antenna, and the use of any external antenna will require separate testing and certification of the complete new system.

EMC testing and any other relevant test applicable to the end-product as a whole, plus appropriate labeling of the end-product, might still be required for the full regulatory compliance in the country.

11.1.8 Taiwan (NCC)

The BGM220S22A modules are certified in Taiwan with NCC certification number of CCAI23Y10060T8.

BGM220S22A 模塊在台灣通過了NCC 認證編號CCAI23Y10060T8 的認證。

Manufacturers are required to mark their end-products with the following sentence: "This product contains a radio frequency module with certification number CCAI23Y10060T8."

系統製造商應在平台上放置如下聲明：“本產品包含認證號為CCAI23Y10060T8的射頻模塊。”

Note: The outer packaging of the final product must also be marked with the NCC conformity mark by the manufacturer

注意：最終產品的外包裝也必須由製造商打上NCC合格標誌

Additionally, the final product will have to be listed in the NCC database of approved radio-equipped devices. Consequently, the end manufacturer is also supposed to contact the certification house that originally released the full modular approval and apply for the registration of their device under the above certification number (fees might apply.)

此外，該平台必須列在 NCC 批准的無線電設備數據庫中。 因此，平台製造商還應聯繫最初頒發全模塊化批准的認證機構，併申請在上述認證編號下註冊其設備（可能需要付費）。

NCC Statement
For low-power radio frequency equipment that has been certified, companies, firms, or users are not allowed to change the frequency, increase the power, or change the characteristics and functions of the original design without further NCC approval. The use of low-power radio frequency equipment shall not affect flight safety and interfere with legal communications. If interference is found, it shall be immediately stopped, and the equipment can be brought back into use only after it has been improved, so that interference is found no more. The aforementioned legal communication refers to radio communications operating in accordance with the provisions of the Telecommunications Management Act. Low-power radio frequency equipment must withstand interference from legitimate communications or radiating electrical equipment for industrial, scientific, and medical applications.

NCC 警語
取得審驗證明之低功率射頻器材，非經核准，公司、商號或使用者均不得擅自變更頻率、加大功率或變更原設計之特性及功能。 低功率射頻器材之使用不得影響飛航安全及干擾合法通信。 經發現有干擾現象時，應立即停用，並改善至無干擾時方得繼續使用。 前述合法通信，指依電信管理法規定作業之無線電通信。 低功率射頻器材須忍受合法通信或工業、科學及醫療用電波輻射性電機設備之干擾。

11.2 Standards-Based Certifications

11.2.1 Bluetooth Qualification

The BGM220S modules come at launch with a pre-qualified Bluetooth Low Energy RF-PHY Tested Component having Declaration ID of D044526 and QDID of 155407, and having a listing date of 2020-09-04.

The BGM220S modules additionally have a pre-qualified Bluetooth Low Energy RF-PHY Tested Component based on Core Specification 5.3 having Declaration ID of D056805 and QDID of 178495, and having a listing date of 2021-11-12.

Notice that the validity set by the SIG for Tested Components is currently of 3 years: during the product lifetime, Silicon Labs will re-assess or re-qualify an RF-PHY Component as it expires, whenever applicable. In case of a re-qualification an RF-PHY Tesed Component will come with a new DID and a new QDID, and these will be then reffered to in end-product listings. Newer DIDs and QDIDs can be discovered by using the search engine in the SIG's Launch Studio, or by asking Silicon Labs via the technical support platform.

This module’s RF-PHY Tested Component should be combined with the latest Wireless Gecko Link Layer and Host pre-qualified Components by Silicon Labs, when in the process of qualifying an end-product embedding the BGM220S via the SIG’s Launch Studio.

12. Revision History

Revision 1.2

October, 2023

- Added regulatory certifcation for BGM220S22A (see Section 11.1.8 Taiwan (NCC).

Revision 1.1

January, 2022

- Updated regulatory certifications in 1. Feature List.
- Updated direction finding language in 2. Ordering Information.
- Added kits available for evaluation in 2. Ordering Information.
- Corrected Storage Temperature range in 4.1 Absolute Maximum Ratings.
- Corrected initial calibrated accuracy in 4.11 High-Frequency Crystal.
- Added footnote for crystal load capacitance with Gain=2 test condition in 4.12 Low Frequency Crystal Oscillator.
- Added RESETn low time to ensure pin reset (T_RESET) specification to Table 4.14 GPIO Pins on page 20.
- Updated 11.1.2 EU and UK - CE and UKCA.
- Updated wording for 11.2.1 Bluetooth Qualification.

Revision 1.0

September, 2020

- Various wording updates to 11.1 Regulatory Certifications to introduce BGM220S22A model.
- Updated wording for 11.2.1 Bluetooth Qualification.

Revision 0.7

July, 2020

- Updated 2. Ordering Information with devices for model BGM220S22A.
- Added Table 3.2 Antenna Efficiency and Peak Gain (BGM220S22A) on page 7 for model BGM220S22A.
- Updated 4. Electrical Characteristics with additional specifications for model BGM220S22A and latest characterization data.
- Added Figure 4.4 BGM220S22A Typical 2D Antenna Radiation Patterns on 55 mm x 20 mm board on page 23 for model BGM220S22A.
- Updated 7. Design Guidelines with guidelines and information covering model BGM220S22A.
- Added marking information for model BGM220S22A to Table 8.3 Top Marking Definition on page 42.
- Added section to note pending certification for model BGM220S22A.

Revision 0.6

June, 2020

- Updated 4.2.1 DC-DC Operating Limits to relax lifetime safe operating region.
- Updated 5. Reference Diagrams to mark PTI interface as recommended in figures.
- Updated 4. Electrical Characteristics with latest characterization results and limits.
- Updated 11. Certifications with additional certification details.

Revision 0.5

March, 2019

- In the front page block diagram, updated the lowest energy mode for LETIMER.
- Updated part numbers in 2. Ordering Information to reflect new ordering code scheme.
- In 2. Ordering Information, added note about referencing by family, model, or ordering code.
- Added 4.13 Precision Low Frequency RC Oscillator (LFRCO).
- Added supply voltage, crystal frequencies and RF frequencies to Figure 3.1 BGM220S Block Diagram on page 6.
- Updated 4. Electrical Characteristics with latest characterization details.
- Updated 5. Reference Diagrams.
- Added section 11. Certifications.
- Added section 5. Reference Diagrams.
- Added section 10. Tape and Reel.

Revision 0.1

September, 2019

Initial release.

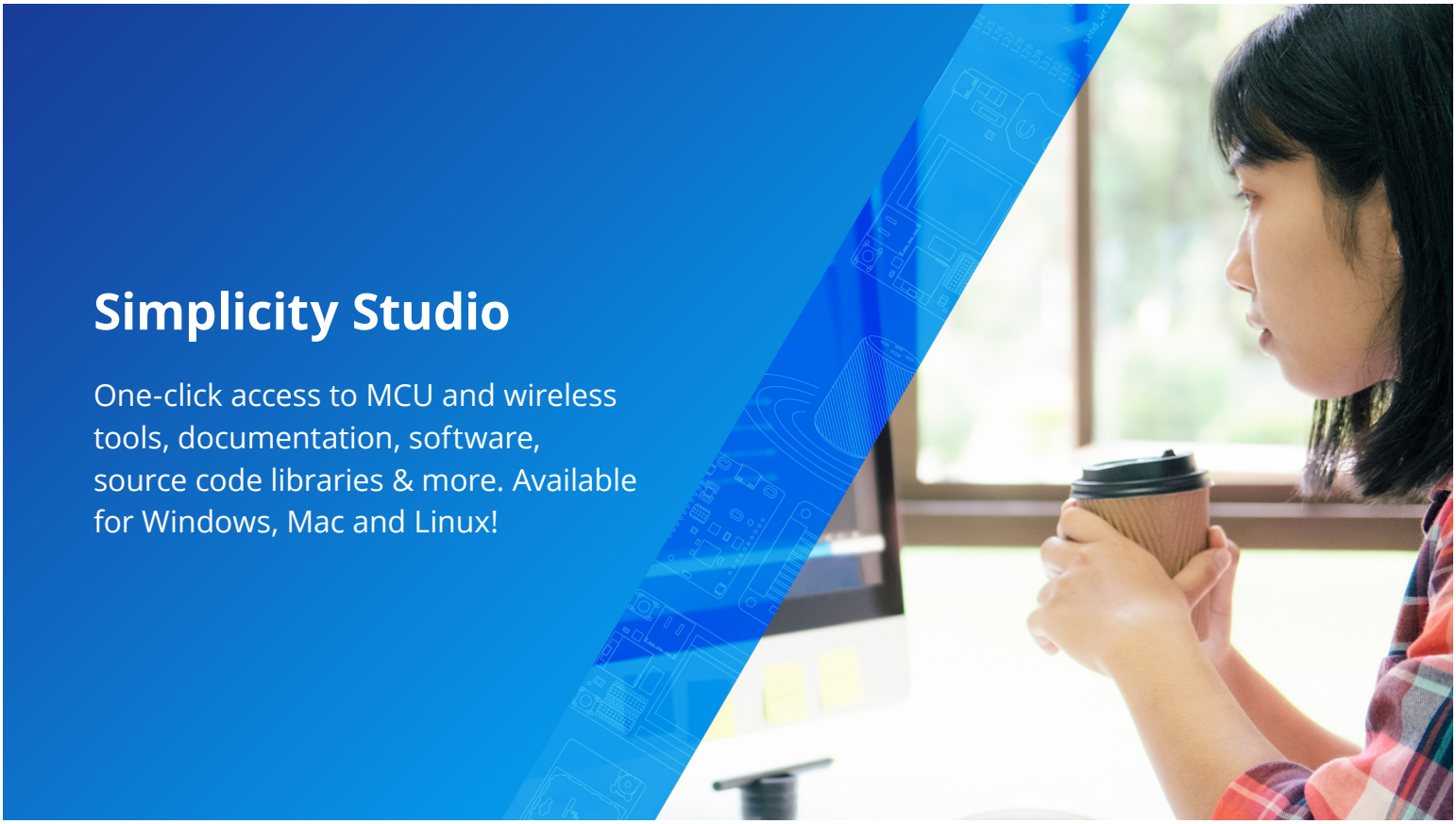

IoT Portfolio
www.silabs.com/IoT

SW/HW
www.silabs.com/simplicity

Quality
www.silabs.com/quality

Support & Community
www.silabs.com/community

Disclaimer
Silicon Labs intends to provide customers with the latest, accurate, and in-depth documentation of all peripherals and modules available for system and software implementers using or intending to use the Silicon Labs products. Characterization data, available modules and peripherals, memory sizes and memory addresses refer to each specific device, and "Typical" parameters provided can and do vary in different applications. Application examples described herein are for illustrative purposes only. Silicon Labs reserves the right to make changes without further notice to the product information, specifications, and descriptions herein, and does not give warranties as to the accuracy or completeness of the included information. Without prior notification, Silicon Labs may update product firmware during the manufacturing process for security or reliability reasons. Such changes will not alter the specifications or the performance of the product. Silicon Labs shall have no liability for the consequences of use of the information supplied in this document. This document does not imply or expressly grant any license to design or fabricate any integrated circuits. The products are not designed or authorized to be used within any FDA Class III devices, applications for which FDA premarket approval is required or Life Support Systems without the specific written consent of Silicon Labs. A "Life Support System" is any product or system intended to support or sustain life and/or health, which, if it fails, can be reasonably expected to result in significant personal injury or death. Silicon Labs products are not designed or authorized for military applications. Silicon Labs products shall under no circumstances be used in weapons of mass destruction including (but not limited to) nuclear, biological or chemical weapons, or missiles capable of delivering such weapons. Silicon Labs disclaims all express and implied warranties and shall not be responsible or liable for any injuries or damages related to use of a Silicon Labs product in such unauthorized applications.
Note: This content may contain offensive terminology that is now obsolete. Silicon Labs is replacing these terms with inclusive language wherever possible. For more information, visit www.silabs.com/about-us/inclusive-lexicon-project

Trademark Information
Silicon Laboratories Inc.®, Silicon Laboratories®, Silicon Labs®, SiLabs® and the Silicon Labs logo®, Bluegiga®, Bluegiga Logo®, EFM®, EFM32®, EFR, Ember®, Energy Micro, Energy Micro logo and combinations thereof, "the world's most energy friendly microcontrollers", Redpine Signals®, WiSeConnect , n-Link, ThreadArch®, EZLink®, EZRadio®, EZRadioPRO®, Gecko®, Gecko OS, Gecko OS Studio, Precision32®, Simplicity Studio®, Telegesis, the Telegesis Logo®, USBXpress® , Zentri, the Zentri logo and Zentri DMS, Z-Wave®, and others are trademarks or registered trademarks of Silicon Labs. ARM, CORTEX, Cortex-M3 and THUMB are trademarks or registered trademarks of ARM Holdings. Keil is a registered trademark of ARM Limited. Wi-Fi is a registered trademark of the Wi-Fi Alliance. All other products or brand names mentioned herein are trademarks of their respective holders.

Silicon Laboratories Inc.
400 West Cesar Chavez
Austin, TX 78701