# SUPV1

## SIRIUS Plug and Play Vehicle Kit

**For use with most newer SIRIUS Plug and Play Radios with the FM Extender Antenna**

SIRIUS®
SATELLITE RADIO
THE BEST RADIO ON RADIO™

# Installation Guide

# Congratulations on the Purchase of your new SUPV1 SIRIUS Universal Plug and Play Vehicle Kit

Your new SUPV1 SIRIUS Universal Plug and Play Vehicle Kit lets you enjoy SIRIUS® Satellite Radio's digital entertainment in any vehicle. Use this manual as a guide for the installation.

The SUPV1 SIRIUS Universal Plug and Play Vehicle Kit will work with most new SIRIUS plug and play satellite radios. See your Plug and Play user manual for specific product compatibility.

For the latest information about this and other SIRIUS products and accessories, visit http://www.sirius.com.

SIRIUS®
SATELLITE RADIO
THE BEST RADIO ON RADIO™

# Table of Contents

**TABLE OF CONTENTS** . . . . . **3**
**WARNING AND SAFETY INFORMATION** . . . . . **4**
Safety Precautions . . . . . 4
Product Compatibility Notice . . . . . 5
Warnings . . . . . 5
**COPYRIGHTS & TRADEMARKS** . . . . . **6**
**PACKAGE CONTENTS** . . . . . **7**
**CONTROLS** . . . . . **9**
**INSTALLATION** . . . . . **10**
Installing the Vehicle Dock . . . . . 10
Installing the Antenna . . . . . 16
Connecting the Cigarette Lighter Adapter . . . . . 19
Docking the SIRIUS Radio . . . . . 19
Maximizing Audio Quality From Your SIRIUS Radio . . . . . 21
Subscribing to the SIRIUS Service . . . . . 36
**TROUBLESHOOTING** . . . . . **37**
**OPTIONAL ACCESSORIES** . . . . . **38**
**WARRANTY** . . . . . **39**
**SPECIFICATIONS** . . . . . **40**
**SIRIUS ID** . . . . . **41**

# Warning and Safety Information

## Safety Precautions

Be sure to observe the following warnings. Failure to follow these safety instructions and warnings may result in a serious accident and/or personal injury.

- Installation must be performed according to this installation guide. SIRIUS is not responsible for issues arising from installations not performed according to the procedures in this guide.
- Do not operate the SIRIUS radio in a way that might divert your attention from driving safely. As a driver, you alone are responsible for safely operating your vehicle in accordance with traffic safety laws at all times.
- Do not install the unit where it may obstruct your view through the windshield, or of your vehicle's indicator displays.
- Before attaching the suction cup mount to your windshield, you should check your state and local laws for regulations regarding mounting this device on your windshield.
- Do not install the unit where it may hinder the function of safety devices such as an airbag. Doing so may prevent the airbag from functioning properly in the event of an accident.
- To avoid short circuits, do not open the unit, and never put or leave any metallic objects (coins, tools, etc.) inside the vehicle dock.
- If the unit emits smoke or unusual odors, turn the power off immediately, and disconnect the unit from any power source.
- Do not drop the unit or subject it to strong shocks.
- The installation and use suggestions contained in this manual are subject to any restrictions or limitations that may be imposed by applicable law. The purchaser should check applicable law for any restrictions or limitations before installing and/or operating this unit.
- Do not install the FM Extender Antenna where it will hinder or block your view. In some states it may be illegal to mount it on the windshield of your vehicle. Check applicable law for any restrictions or limitations before installing the FM Extender Antenna on your windshield.
- Do not install the FM Extender Antenna where it may hinder the function of safety devices such as an airbag. Doing so may prevent the airbag from functioning properly in the event of an accident.

# Product Compatibility Notice

The SUPV1 is compatible only with plug and play products that use the New SIRIUS Universal Docking capability. This product specifically is not intended nor is it approved for use with SIRIUS radios exhibiting FCC identification numbers NKRUPASV301, NKRUPAST401, P3HSP4, P3HNSPH4, P3HNSPH3, or P3HNSPH-3.

# Warnings

**Notice To Drivers In California and Minnesota**

State law prohibits drivers in California and Minnesota from using suction mounts on their windshields while operating motor vehicles. Other dashboard or friction mounting options should be used. SIRIUS does not take any responsibility for any fines, penalties, or damages that may be incurred as a result of disregarding this notice. (See California Vehicle Code Section 26708(a); Minnesota Statutes 2005, Section 169.71)

**Operating Temperature**

The SIRIUS Cigarette Lighter Adapter is designed to operate between -20° to +85° C (-4° to +185° F). Avoid leaving it in a vehicle or elsewhere where the temperature may fall outside this range.

**Cleaning and Maintenance**

If the vehicle dock becomes dirty, turn the power off and wipe it clean with a soft cloth. Do not use hard cloths, strong cleaning fluids, paint thinner, alcohol, or other volatile solvents to clean. These may cause damage to the unit.

**Cigarette Lighter Adapter**

The SUPV1 cannot be powered directly from a vehicle's 12 VDC power system. It must be powered using the included Cigarette Lighter Adapter only. Connecting the SUPV1 directly to the vehicle's 12 VDC power system may result in damage to the vehicle dock or SIRIUS radio, or both.

# Copyrights & Trademarks

© 2006 SIRIUS Satellite Radio Inc. All Rights Reserved.

® “SIRIUS”, the SIRIUS dog logo, channel names and logos are trademarks of Sirius Satellite Radio Inc. All Rights Reserved.

Hardware, subscription, and activation fee required. For full Terms & Conditions, visit http://sirius.com. Prices and programming are subject to change. Not available in HI and AK. Equipment and subscription sold separately. Installation required with some equipment.

# Package Contents

The following items are included with your purchase of the SUPV1 SIRIUS Universal Plug and Play Vehicle Kit. Unpack the kit carefully and make sure that everything shown is present. If anything is missing or damaged, or if the kit fails to operate properly, notify your dealer immediately. It is recommended that you retain the original carton and packing materials in case you need to ship your kit in the future.

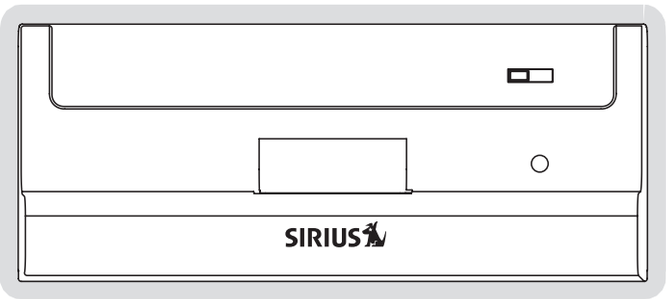


**Vehicle Dock**

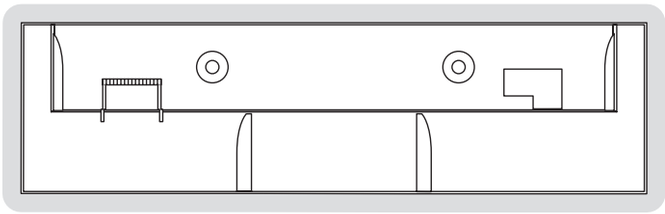

**Vehicle Dock Adapter**

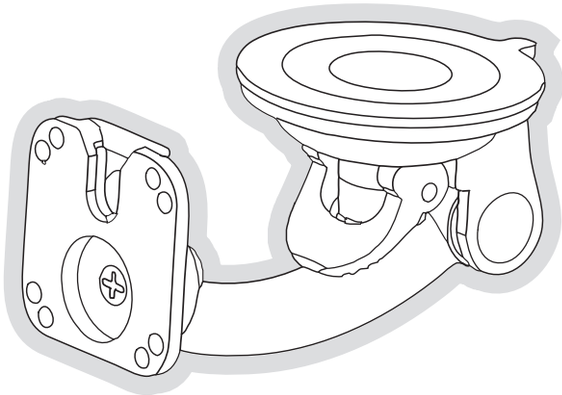

**Suction Cup Mount**

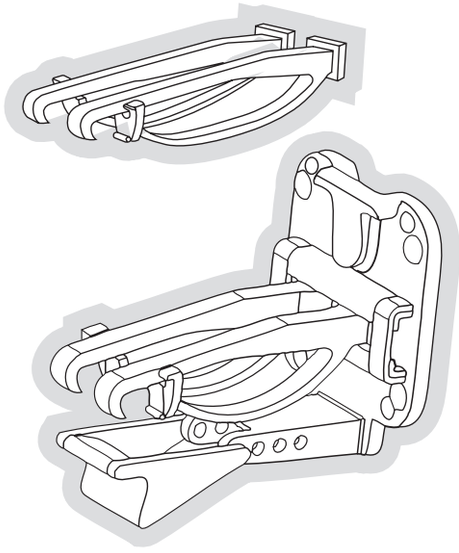

**Vent Mount & Extended Vent Hooks**

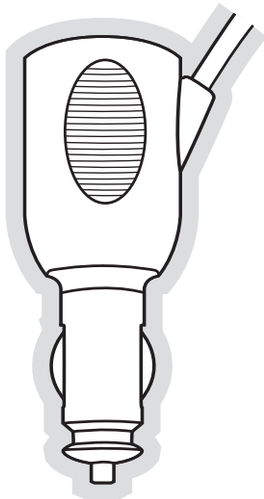

**Cigarette Lighter Adapter**

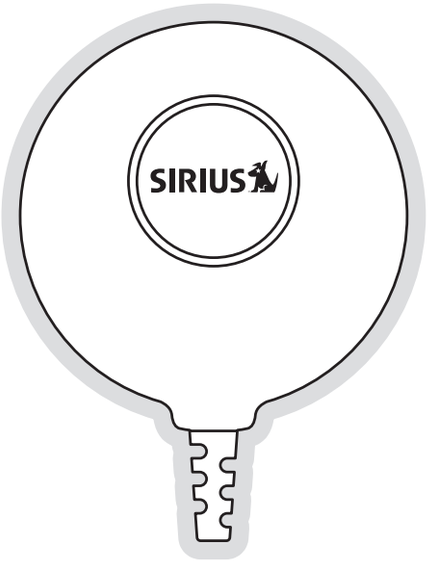


**Magnetic Antenna**

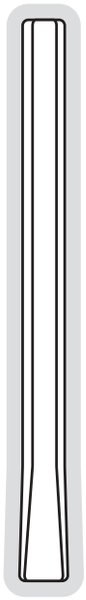

**Antenna Cover/Tail**

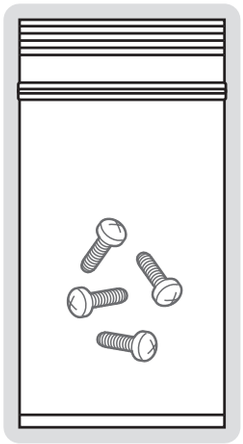

**Mounting Screws**

**Alcohol Swab**

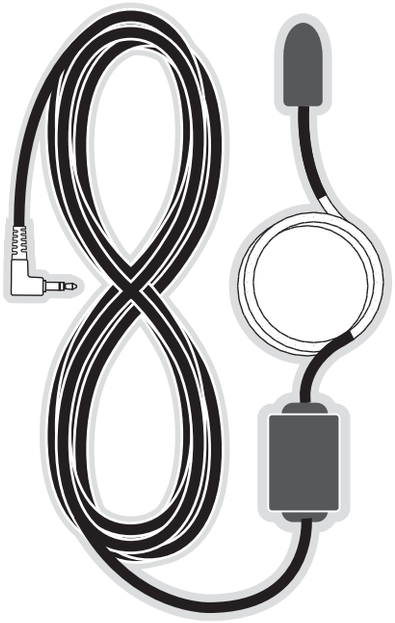

**FM Extender Antenna**

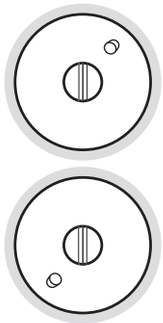

**Suction Cups (2)**

**Self Adhesive Cable Guides (3)**

# Controls

Figure 1 and the section following identify and describe the controls and connectors of the vehicle dock.

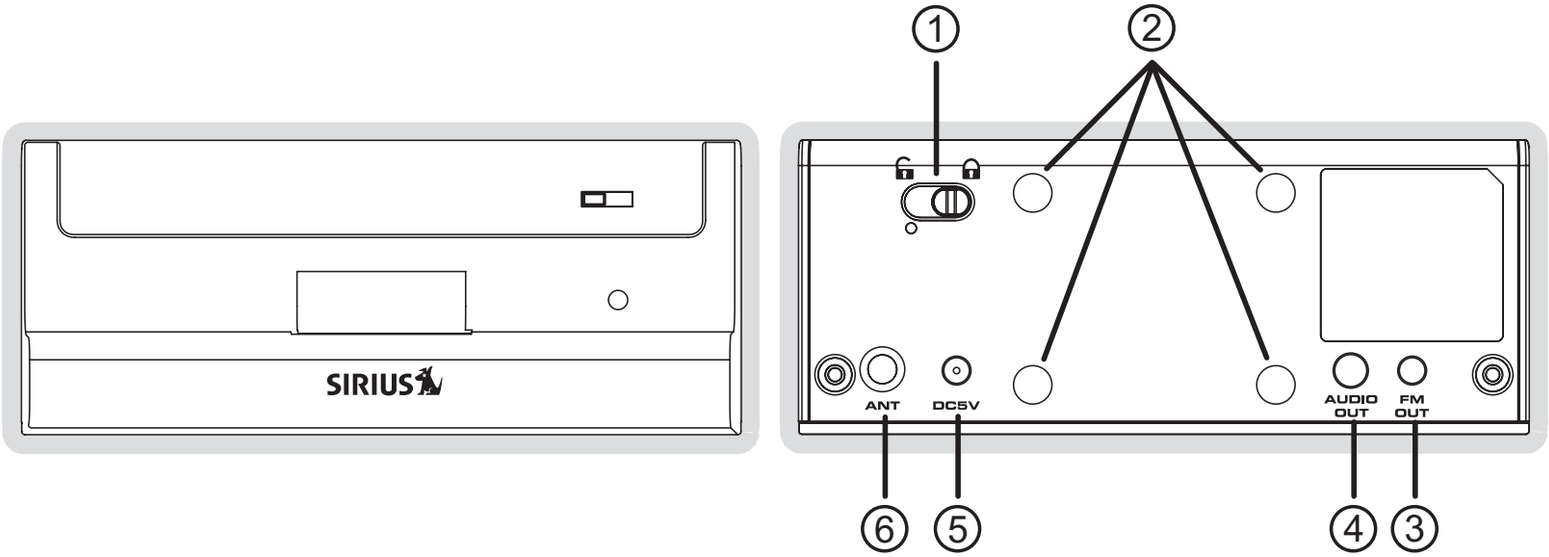


**Figure 1**

1. **Lock Switch**: Locks and unlocks the SIRIUS radio in the vehicle dock.
2. **Mounting Holes**: Mounting holes for attaching the suction cup mount or the vent mount.
3. **FM OUT Connector**: FM output for use with the optional FM Direct Adapter.
4. **AUDIO OUT Connector**: Optional audio output connection for connecting to your vehicle's audio system if you are not using the FM transmitter.
5. **DC5V Power Connector**: Power connection for the cigarette lighter adapter.
6. **ANT Antenna Connector**: Connection for the provided magnetic antenna.

# Installation

SIRIUS suggests professional installation of this product in your vehicle. Professional installation provides an experienced technician to install this product in your vehicle, advice for selecting a suitable mounting location, installation of the antenna, and routing all the necessary wires and cables. If the FM reception within your vehicle proves to be poor, an installer will have the necessary accessories to install an optional FM Direct Adapter, or an audio cable, to connect the audio output of the vehicle dock directly to your vehicle's audio system. Ask your SIRIUS retailer if they provide professional installation services, or can recommend a professional installation service.

## Installing the Vehicle Dock

When installing the vehicle dock in your vehicle, choose a location in your vehicle where it will not block your vision, interfere with the vehicle controls, or obstruct the air bag. The location should be easily accessible and provide good visibility of the display, and should not be located where it will be in direct sunlight which will affect the visibility of the display screen.

The mounting accessories necessary to install the vehicle dock in a vehicle are provided. Figure 1 shows two examples of the SIRIUS radio mounted in a vehicle: **A** is the suction cup mount method, and **B** is the vent mount method using the vent mount clip.

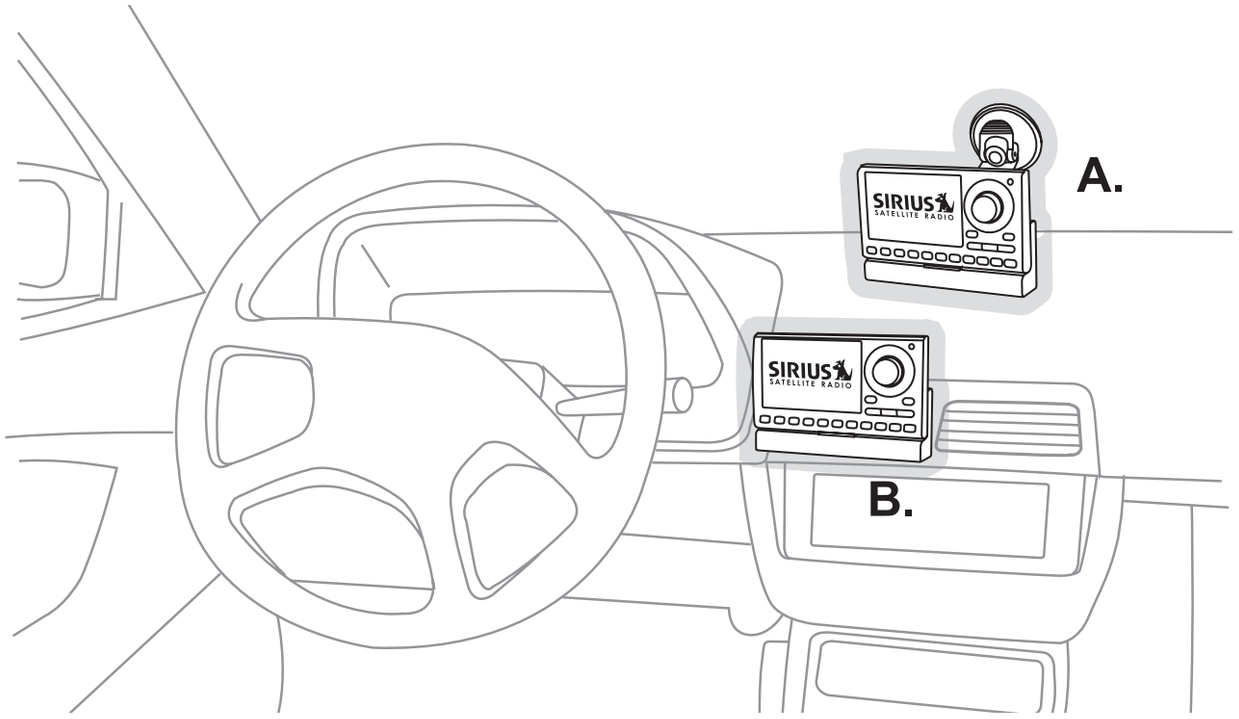


**Figure 1**

Depending upon the mounting location you select in your vehicle, the mount should be attached to the vehicle dock and installed as described in the following sections.

**Suction Cup Mount Method (A)**

The suction cup mount may be attached to any smooth surface. Before attaching the suction cup mount to your windshield, you should check your state and local laws for regulations regarding mounting this device on your windshield.

To mount the vehicle dock using the suction cup mount, assemble the mount as follows:

1. Attach the vehicle dock to the suction cup mount using the provided screws. (Figure 2)

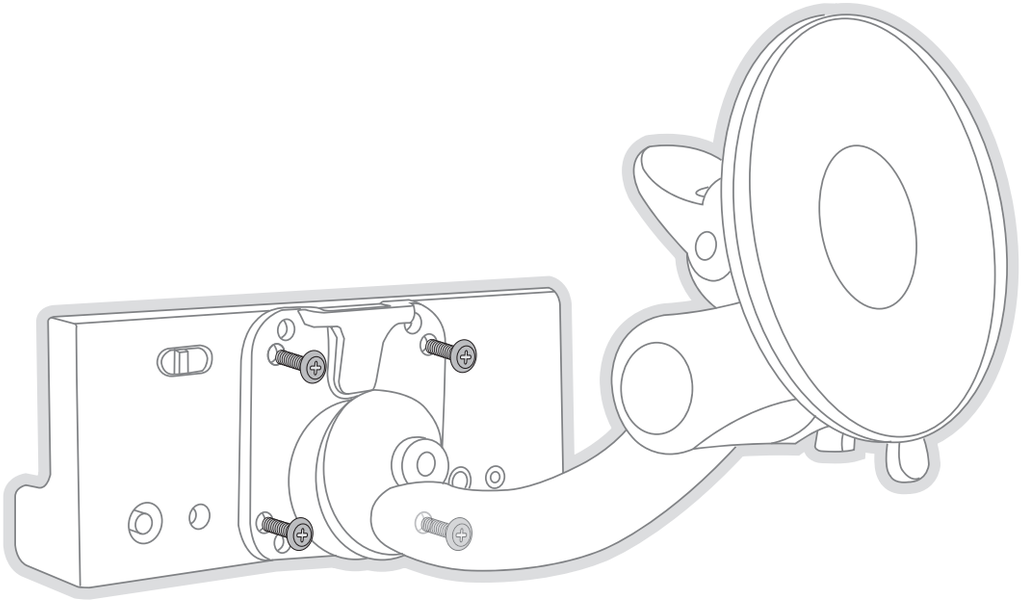

**Figure 2**

2. Clean the area where you are attaching the suction cup with an alcohol wipe.

3. Be sure the cam lever is up (as shown in Figure 3) and position the suction cup mount on the windshield or other location you which have chosen. Press the cam lever all the way down towards the base of the mount until it locks to adhere the suction cup. (To unlock the suction cup, lift the lever up.)

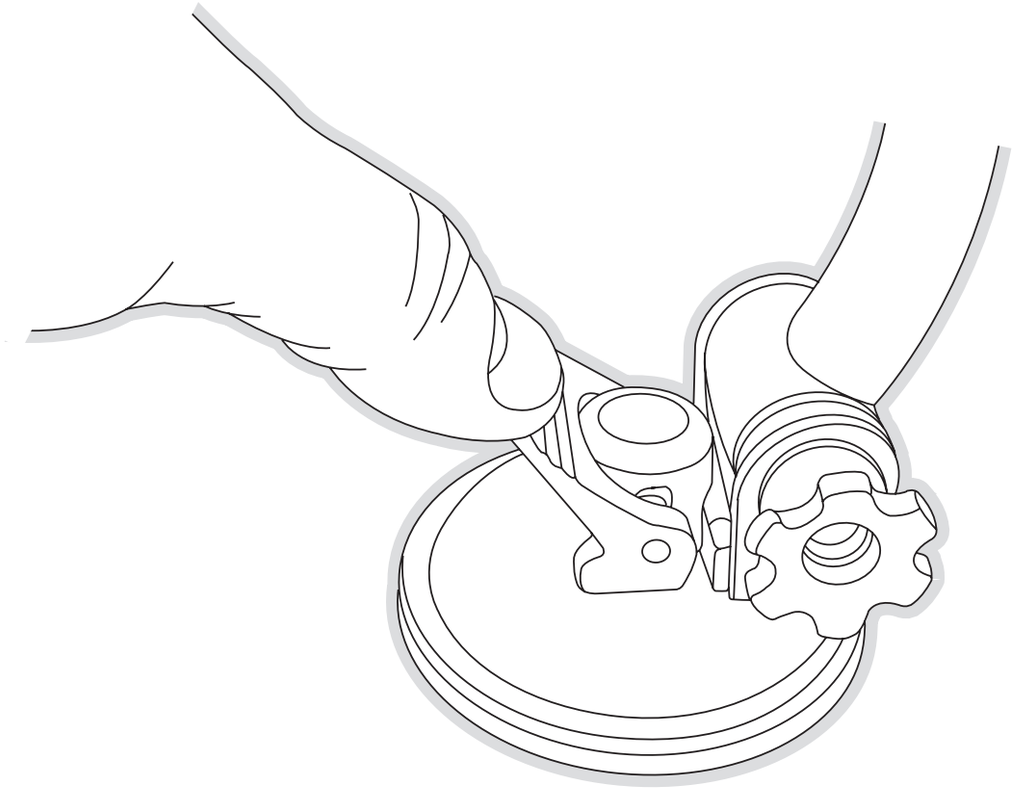

**Figure 3**

**Vent Mount Method (B)**

To mount the vehicle dock using the vent mount method, install the vent mount as follows:

1. If the vent louvers in your vehicle are recessed, you may need to use the longer vent hooks with the vent mount. Refer to Figure 4 and install the longer vent hooks into the vent mount. Be sure to observe the orientation of the vent hooks as shown.

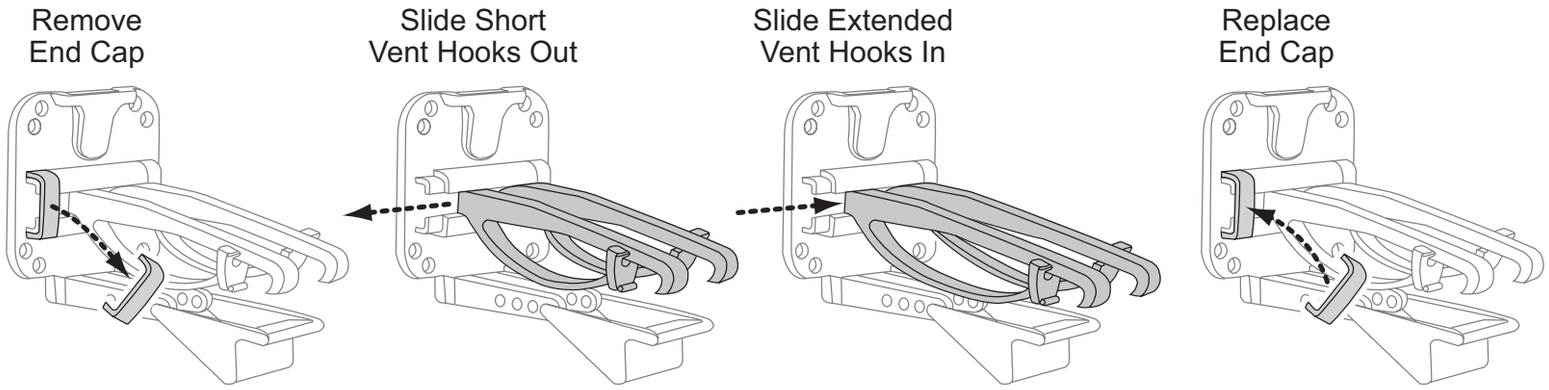


**Figure 4**

2. Attach the vent mount to the vehicle dock using the provided screws. (Figure 5)

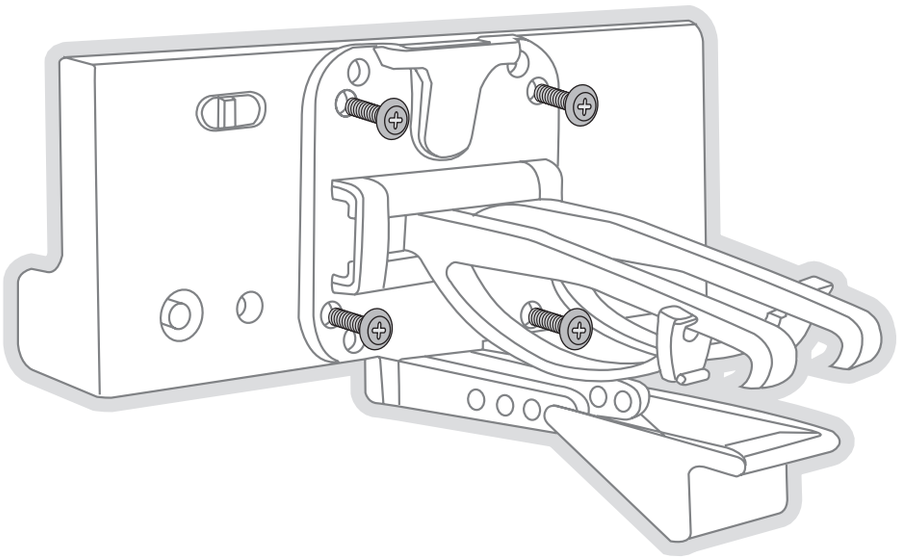

**Figure 5**

3. Refer to Figure 6 and attach the vent mount to a heating/air conditioning vent in your vehicle. Position the two tension springs **A** against a vent louver **B**. Then push the vent mount into the vent, far enough so that the hooks **C** drop down and hook the rear of the vent louver (Figure 7). Once you are sure that the hooks have grasped a vent louver, the tension springs **A** will keep the vent mount hooked to the louver.

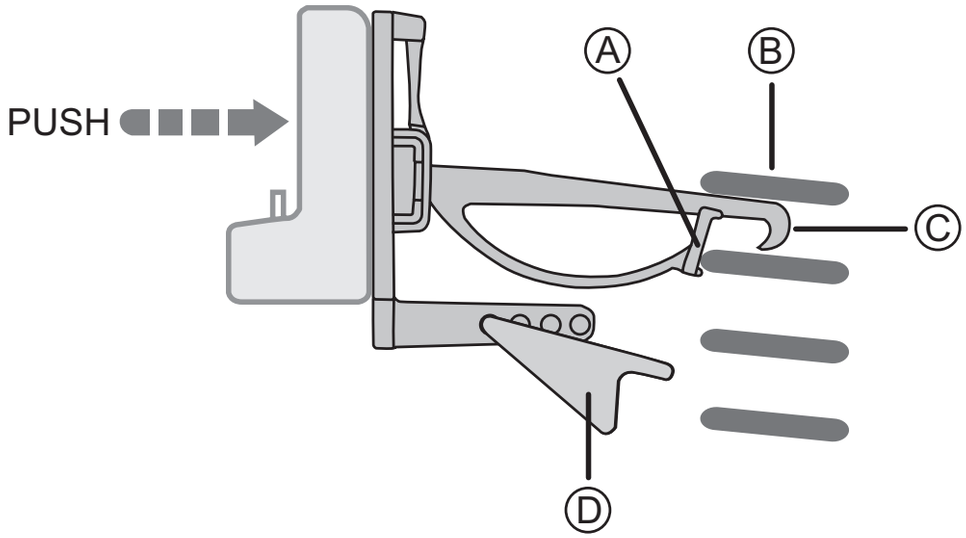


**Figure 6**

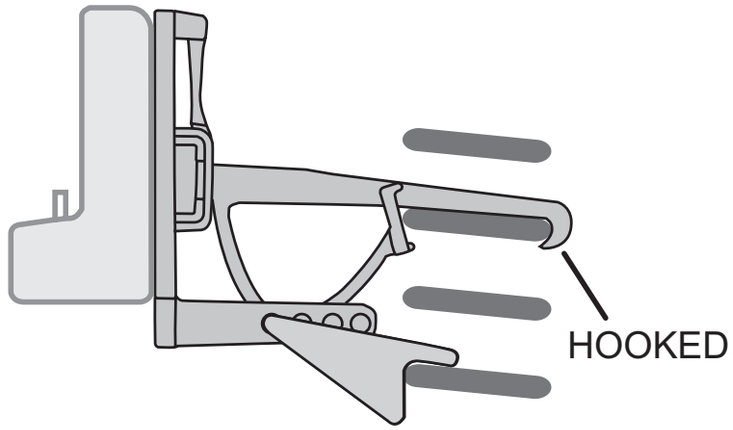


**Figure 7**

4. The angle of the vehicle dock may be changed by changing the position of foot **D** on the vent mount (Figure 6) to a different adjustment hole. (Figure 8)

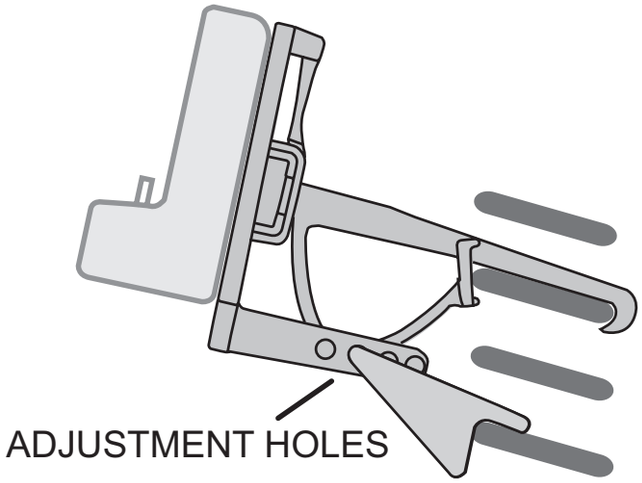


**Figure 8**

# Installing the Antenna

The optimum mounting location for the magnetic antenna is on the roof of the vehicle, with a minimum unobstructed area of 12 inches by 12 inches, and exactly 6½ inches from the rear roof edge of the vehicle (the length of the rubber antenna cable cover/tail). It is important to avoid any obstructions that will block the SIRIUS signal, obstructions such as a roof rack, a sunroof, roof mounted cargo containers, or other antennas. For convertible vehicles, the antenna should be installed on the trunk lid.

For best performance, it is recommended that the antenna be installed with the rubber antenna cable cover/tail. This rubber antenna cable cover/tail provides two benefits: first, it positions the antenna the recommended distance from the rear window, rear door/hatch, or trunk edge to give the antenna the best view of the sky. Secondly, it conceals and protects the exposed antenna cable. The rubber antenna cable cover/tail has adhesive strips that hold it securely in place.

The following illustrations show the recommended mounting locations of the antenna for several types of vehicles. (Figure 9) Follow these recommendations for best performance from the antenna.

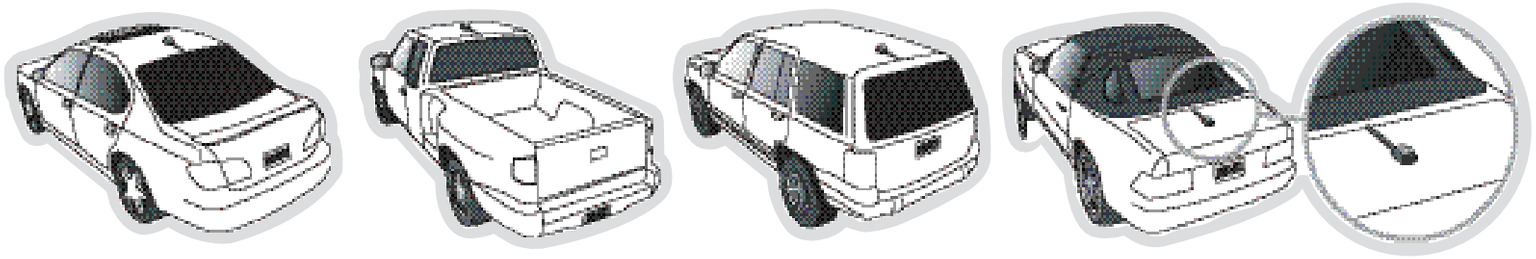

**Figure 9**

**Sedan/Coupe**. Mount the antenna along the rear center-line of the vehicle roof, located at the rear of the roof near the rear window.

**Pickup Truck**. Mount the antenna along the rear center-line of the cab roof, located at the rear of the roof near the rear window.

**SUV/Mini-Van**. Mount the antenna along the rear center-line of the vehicle roof, located at the rear of the roof near the rear door/hatch.

**Convertible**. Mount the antenna along the center-line of the trunk lid, with the rubber antenna cable cover/tail directed toward the rear window.

When you have selected a suitable mounting location, clean the area where the antenna and rubber antenna cable cover/tail will be mounted with the supplied alcohol swab.

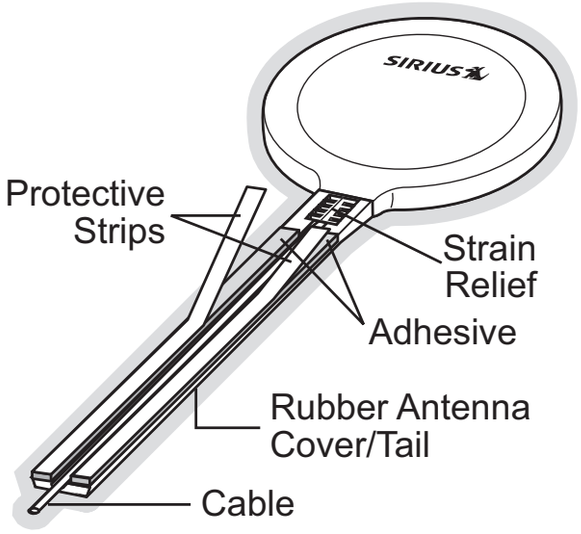


**Figure 10**

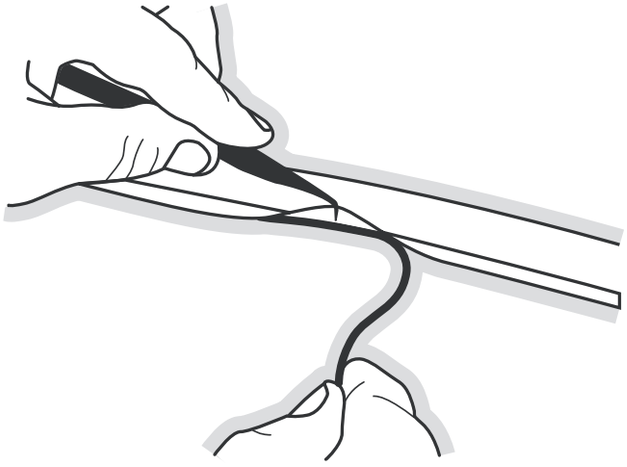

**Figure 11**

Connect the rubber antenna cable cover/tail to the antenna cable, making sure that the strain-relief on the antenna sits into the rubber antenna cable cover/tail groove. (Figure 10) Route the antenna cable through the wire channel in the rubber antenna cable cover/tail. Do not remove the protective strips yet.

Temporarily position the antenna and rubber antenna cable cover/tail in the selected mounting area and route the cable from the antenna to the vehicle's interior by tucking it underneath the rubber molding around rear window, as shown in Figure 11.

Route the cable from the lowest point of the rear window into the trunk. Take advantage of any existing cable channels or wiring conduits. For SUVs, mini-vans and 5-door vehicles, bring the cable into the vehicle under the rubber molding for the tailgate, and continue under the interior trim.

From the trunk, or rear of the vehicle, route the cable around the passenger compartment and to the front of the vehicle, to the radio. Take care not pull the cable across sharp edges that could damage it, and keep it away from areas where it might entangle feet. Coil any excess antenna cable in a location where it can be hidden.

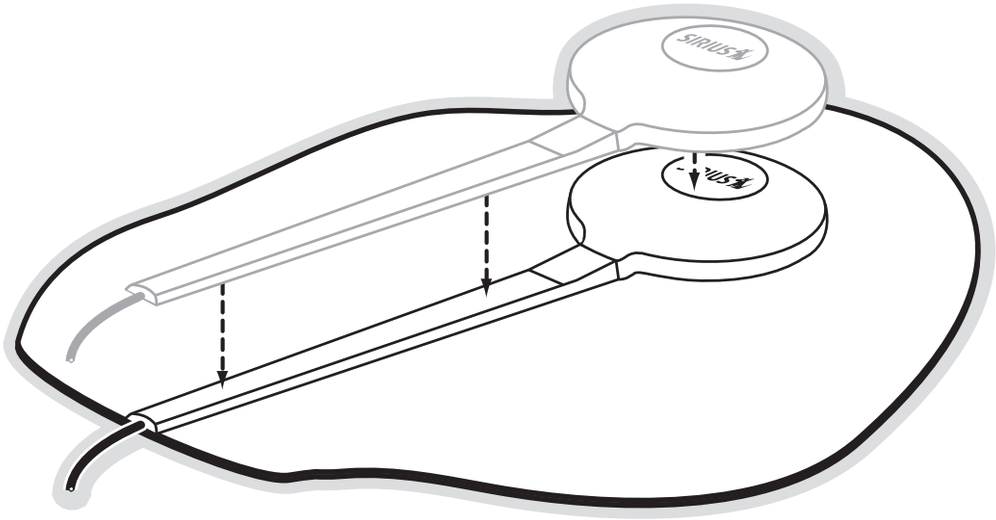


**Figure 12**

Once the antenna cable is routed through the vehicle, and you are satisfied with the cable routing, peel the protective material from the adhesive strips and press the rubber antenna cable cover/tail firmly into place on the vehicle. Double check that the location of the antenna and rubber antenna cable cover/tail are correct, and continue to press firmly down on rub-

ber antenna cable cover/tail for another 30 seconds. (Figure 12) At room temperature (68 degrees), maximum adhesion usually occurs within 72 hours. During this period, avoid car washes and other contact with the antenna and rubber antenna cable cover/tail.

Connect the antenna cable to the **ANT** connection at the rear of the vehicle dock. (Refer to Figure 1 on page 9 for the location of this connector.)

## Connecting the Cigarette Lighter Adapter

Connect the provided cigarette lighter adapter to the **DC5V** connection at the rear of the vehicle dock. (Refer to Figure 1 on page 9 for the location of this connector.)

## Docking the SIRIUS Radio

If your radio is a SIRIUS Plug and Play series ST or SV, you will need to install the vehicle dock adapter provided with the kit. Refer to Figure 13 and place the vehicle dock lock in the unlocked position (1). Install the adapter into the front of the vehicle dock, positioning it behind the connector and against the backrest (2). Once the adapter is installed in the vehicle dock, slide the lock to the locked position (3). The radio may now be placed into the vehicle dock, pressing the radio down until it is fully seated.

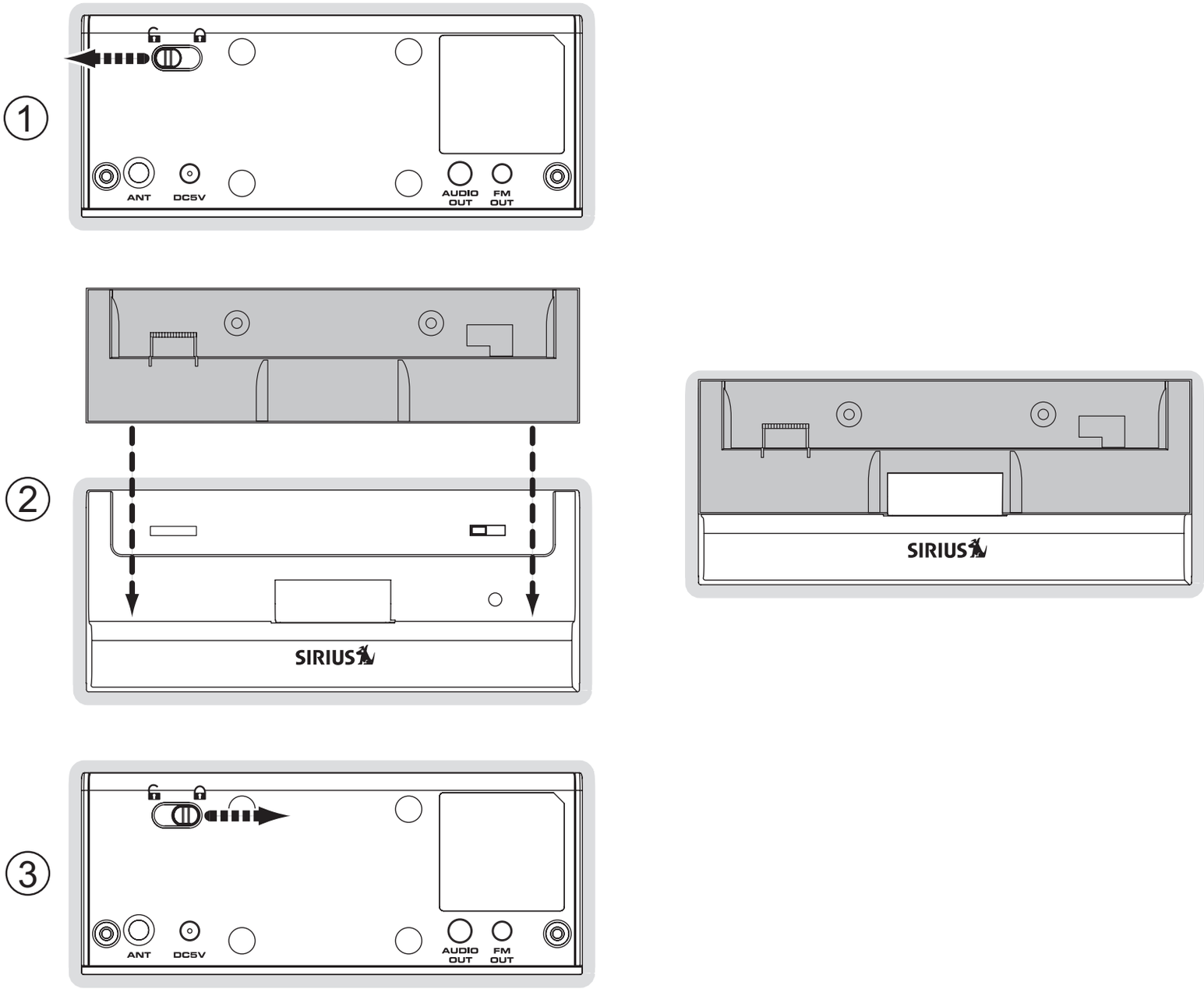


**Figure 13**

For SIRIUS radios which do not require the adapter, make sure the lock on the vehicle dock is set in the unlocked position and place the SIRIUS radio into the vehicle dock, pressing the radio down until it is fully seated. Slide the lock into the locked position. (Refer to Figure 1 on page 9 for the location of the lock.)

# Maximizing Audio Quality From Your SIRIUS Radio

There are two primary ways to connect your SIRIUS radio to your vehicle radio: **Wireless Connection** or **Direct Connection**. The following sections will help you obtain the best performance. For the latest information go to **http://www.sirius.com/vehicleinstallation**.

**WIRELESS CONNECTION**

Your SIRIUS radio contains an FM transmitter. The FM transmitter sends the audio from your SIRIUS radio to your vehicle radio. (Figure 14)

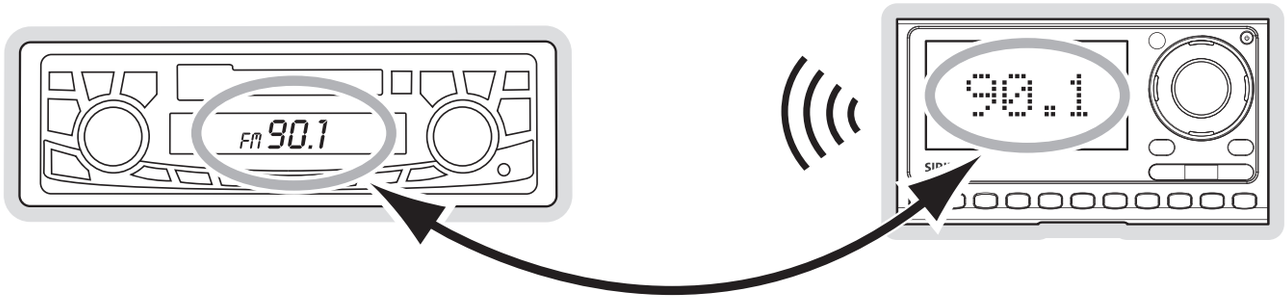


**Figure 14**

Included with your SIRIUS radio is an FM Extender Antenna to maximize the audio quality of your SIRIUS radio when using a wireless audio connection. Should the wireless audio quality without the FM Extender Antenna be not acceptable, you can try using the FM Extender Antenna (or opt for a direct connection).

**Wireless Audio Connection Without the FM Extender Antenna**

To tune your vehicle's FM radio and your SIRIUS radio to the same FM channel (Figure 14):

1. Turn off your SIRIUS radio and tune through the FM channels on your vehicle's radio to locate an FM channel that is not broadcasting in your area. If you use an FM channel that is being used by a local broadcaster, it will interfere with the performance of your SIRIUS radio. Once you have located an FM channel that is not broadcasting in your area, save it as a preset on your vehicle radio. This will become your SIRIUS preset.
2. Turn on your SIRIUS radio. In the *Settings* or *Menu* in your SIRIUS radio, locate the ***FM Frequency*** adjustments. Set the channel number on your SIRIUS radio to match the SIRIUS preset on your vehicle's radio.  Refer to your user guide for detailed instructions on how to do this.

**Note:** The FM transmitter in your SIRIUS radio is automatically set to FM channel 88.1. This may not be the best channel in your area.

**Tip:** If you regularly travel between cities with different active FM channels, you may need to find channels that are not broadcasting in each city. Several SIRIUS radio models can store multiple FM transmit channels, so you can easily switch to the best FM channel for each city. Refer to your user guide for details on this feature. You will also want to set the FM channels that are not broadcasting in each city as presets on your vehicle's radio.

If you're not sure which FM channels are not broadcasting in your home or travel cities, you can also go to **http://www.sirius.com/fmchannel** and search for a suggested FM channel based on your zip code.

**Wireless Audio Connection Using the FM Extender Antenna**

The purpose of the FM Extender Antenna is to maximize the audio quality of your SIRIUS radio when using the FM transmitter in your SIRIUS radio to transmit the audio to your vehicle's FM radio. Proper placement of the FM Extender Antenna inside your vehicle in close proximity to the vehicle's own FM antenna will provide a strong FM signal for good reception. The FM Extender Antenna has permanent adhesive mounts for installing it on your vehicle's window.

Because of the different kinds of FM antennas found in vehicles, and the varied locations of the antenna in each vehicle, SIRIUS suggests professional installation of this product in your vehicle. Professional installation provides an experienced technician to install this product in your vehicle, knowledge of your vehicle for locating the vehicle's FM antenna, installation of this product, and routing the cable and connecting it to your SIRIUS radio. Ask your SIRIUS retailer if they provide professional installation services, or can recommend a professional installation service.

The FM antennas found in vehicles are of four distinct types:

- **Aerial Type Fender Mounted FM Antenna:** A fixed or retractable aerial antenna located on the front or rear fender of the vehicle.

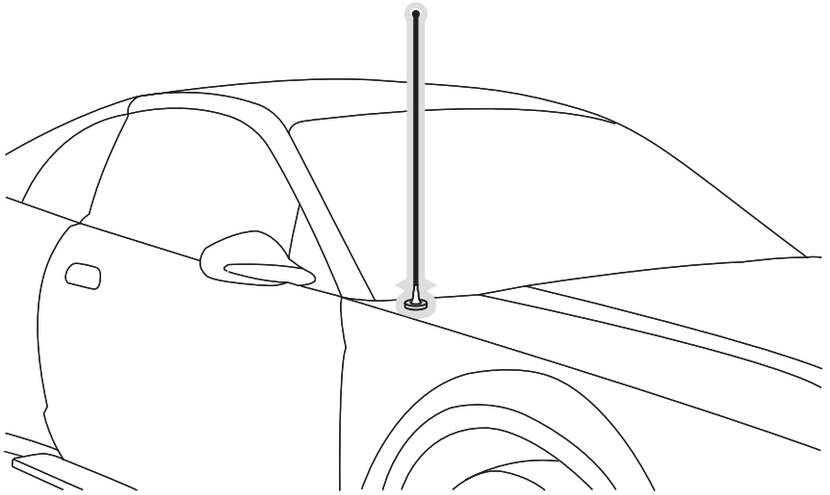

- **Aerial Type Roof Mounted FM Antenna:** A fixed aerial antenna mounted on the roof (often at the front or rear of the roof, just above the window glass).

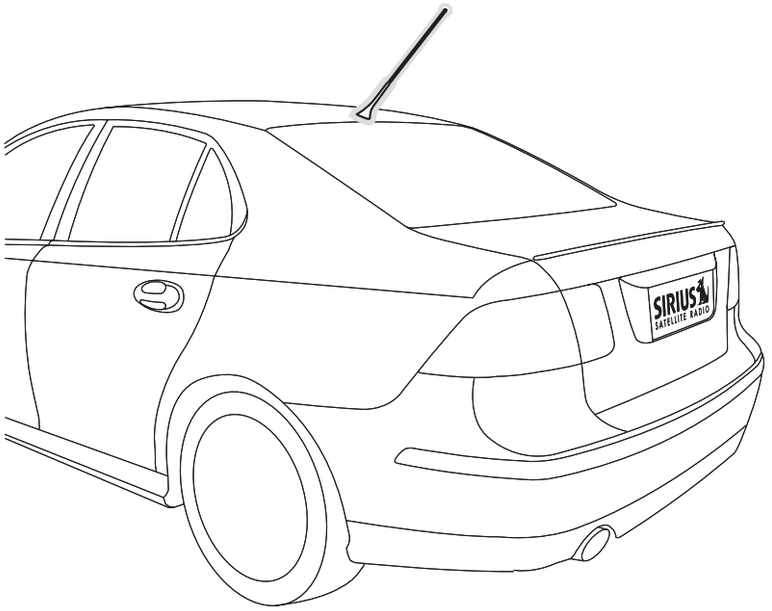

- **On Glass Type FM Antenna:** Wires on the window glass of the vehicle, usually near the top of the window. It may be located on the windshield glass, the rear window glass, or a rear side window in some SUV and mini-van type vehicles (and other vehicles). It will look similar to the rear window defroster wires found in many vehicles.

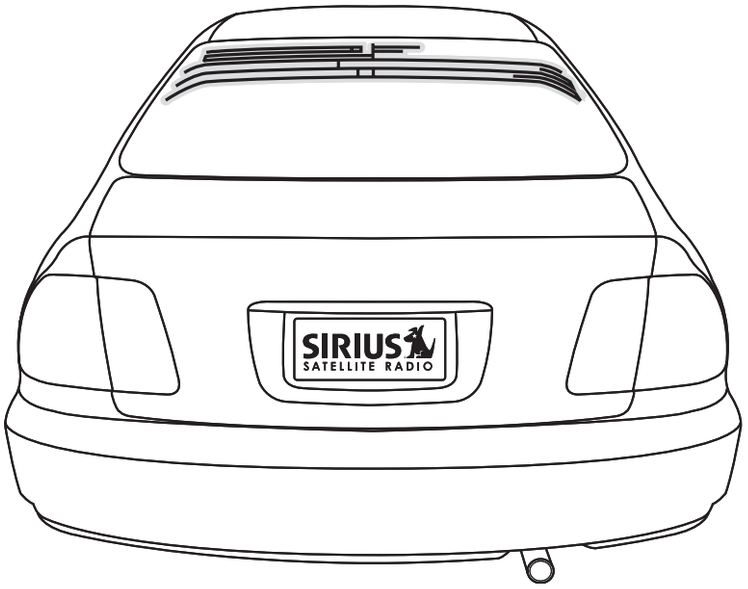


- **"Shark Fin" Type FM Antenna:** A device resembling a shark fin (or other shape) located on the vehicle roof above the rear window.

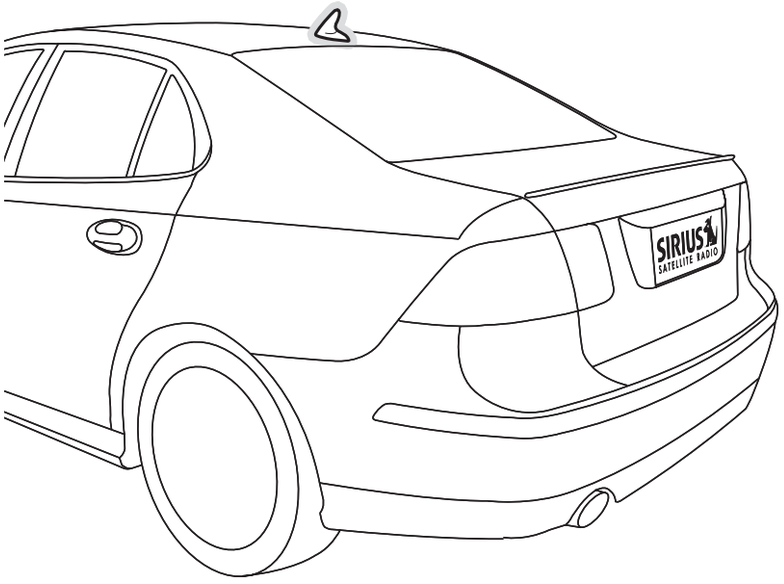


Before attempting installation, you should verify the type and location of the FM antenna in your particular vehicle. If you have trouble locating it, consult the manual which accompanied your vehicle, consult a dealer for your type of vehicle, or consult a professional installer.

The FM Extender Antenna should be placed inside the vehicle, as close as possible to the vehicle's FM antenna. A test mounting should be done first using the included suction cup mounts to test the installation. Once an acceptable location has been found, you will remove the suction cups and permanently adhere the FM Extender Antenna using the adhesive mounts.

To install the FM Extender Antenna in your vehicle, follow these instructions:

1. Attach the suction cups to the FM Extender Antenna in the positions shown in Figure 15.

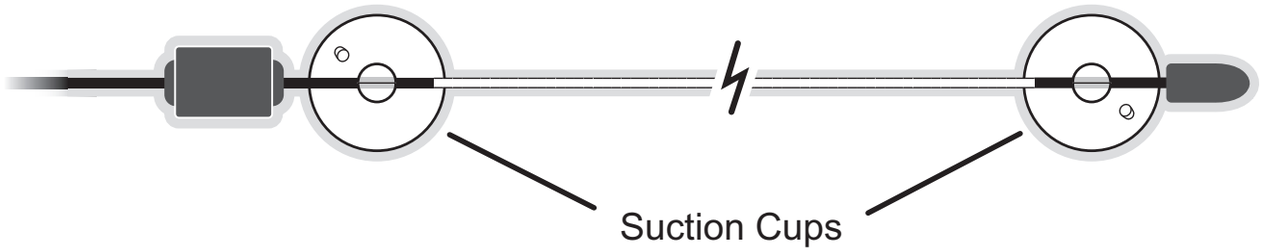


**Figure 15**

2. In this step, follow the specific instructions in sub-step **a**, **b**, **c**, or **d** depending on the type of FM antenna in your vehicle:

   **a.** **<u>Installation Instructions for Vehicles with Aerial Type Fender Mounted FM Antenna</u>.** For vehicles where the FM radio antenna is located on the front fender, the FM Extender Antenna should be mounted vertically on the front windshield at the edge of the glass nearest to the antenna. (Figure 16)

   For vehicles where the FM radio antenna is located on the rear fender, the FM Extender Antenna should be mounted vertically on the rear window at the edge of the glass nearest to the antenna. (Figure 17)

   Attach the FM Extender Antenna to the section of glass closest to the FM antenna in a vertical orientation. (Figure 16 or Figure 17) The wire between the two suction cups should be pulled taut and as straight as possible, and should not obstruct the driver's view.

   **Important Caution:** In some states it may not be legal to put the FM Extender Antenna on the windshield glass. In this case, the FM Extender Antenna should be mounted on the A-Pillar adjacent to the FM antenna. (Figure 16)

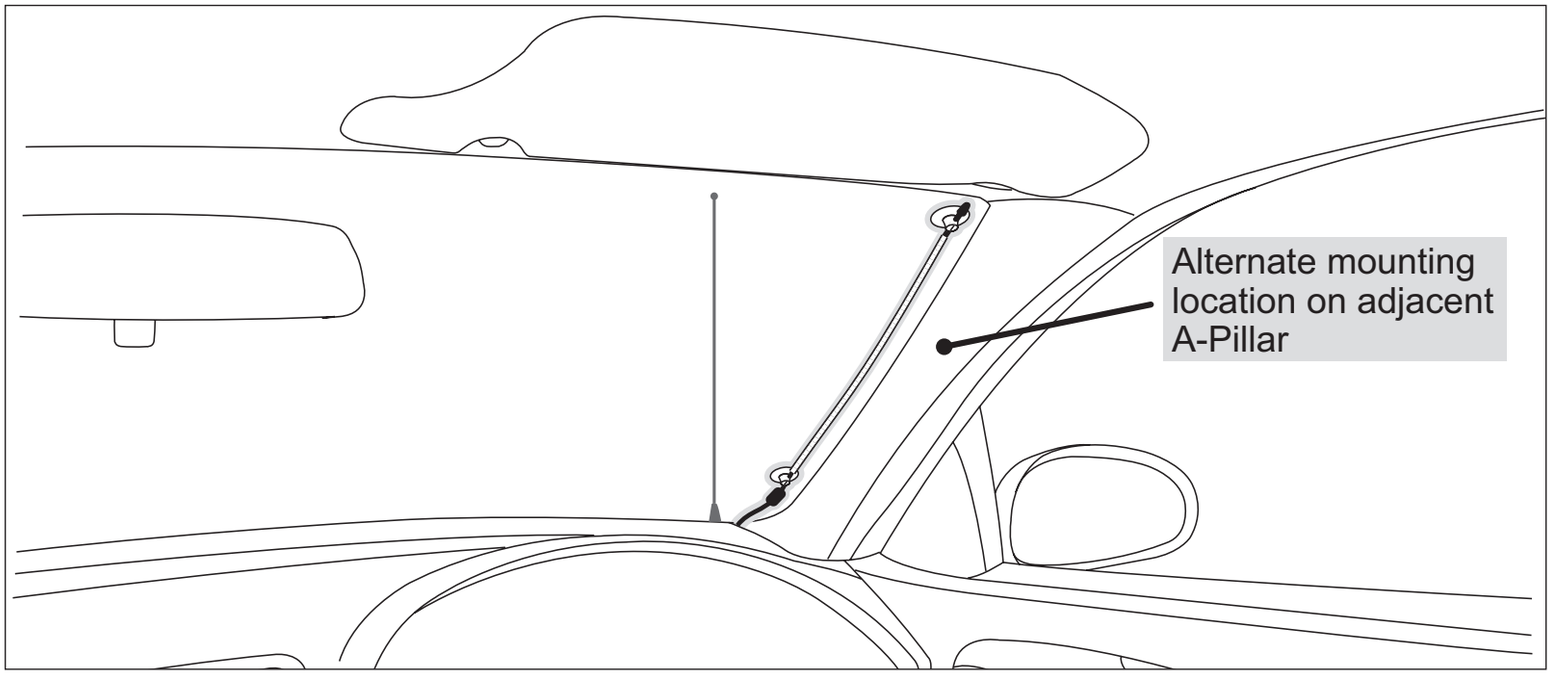


**Figure 16**

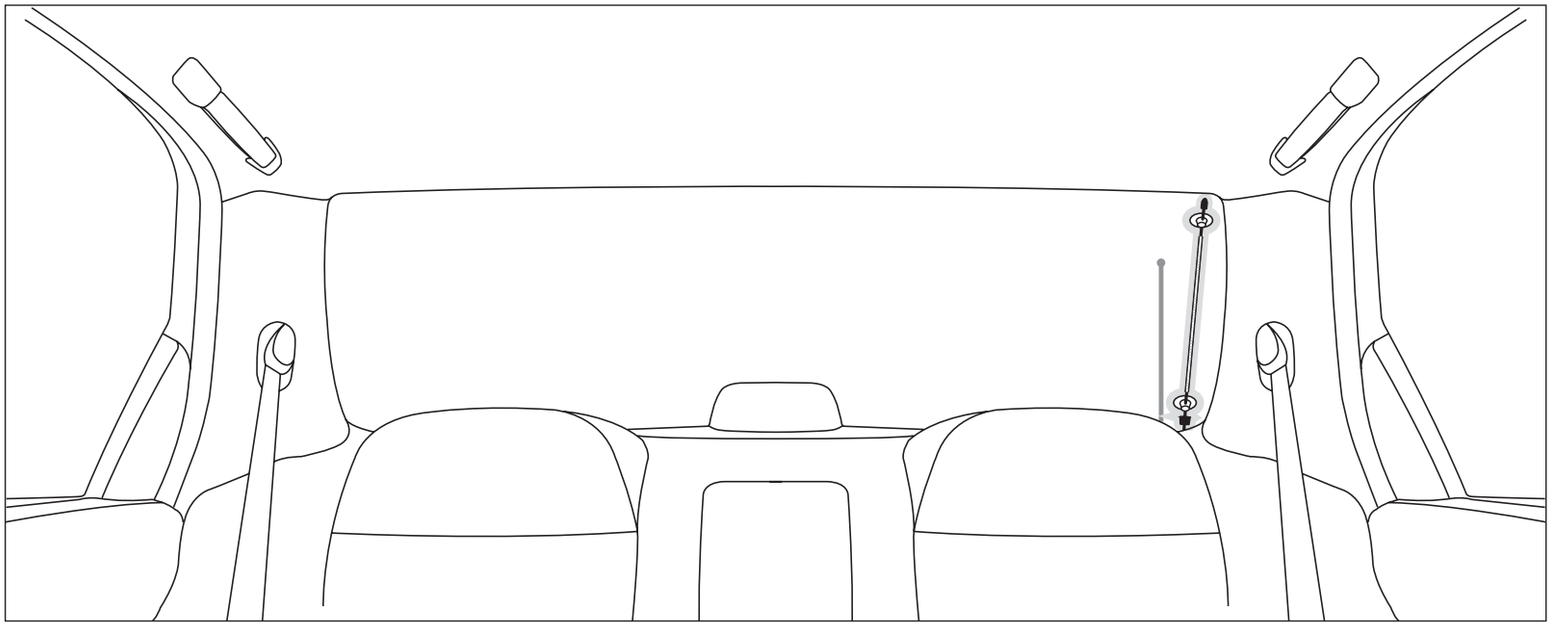

**Figure 17**

**b. <u>Installation Instructions for Vehicles with Aerial Type Roof Mounted FM Antenna</u>.**
For vehicles where the FM radio antenna is located on the front or rear of the roof of the vehicle, the FM Extender Antenna should be mounted horizontally on the front or rear glass below the FM antenna, or installed into the headliner of the vehicle under the FM antenna.

- If you are installing the FM Extender Antenna on the window glass, attach the suction cups to the glass under the FM antenna in a horizontal orientation. The wire between the two suction cups should be pulled taut and as straight as possible, and should not obstruct the driver's view. (Figure 18)
- If you are installing the FM Extender Antenna into the headliner, remove the suction cups and tuck the wire into the headliner, stretched taut and straight, and centered under the FM antenna.

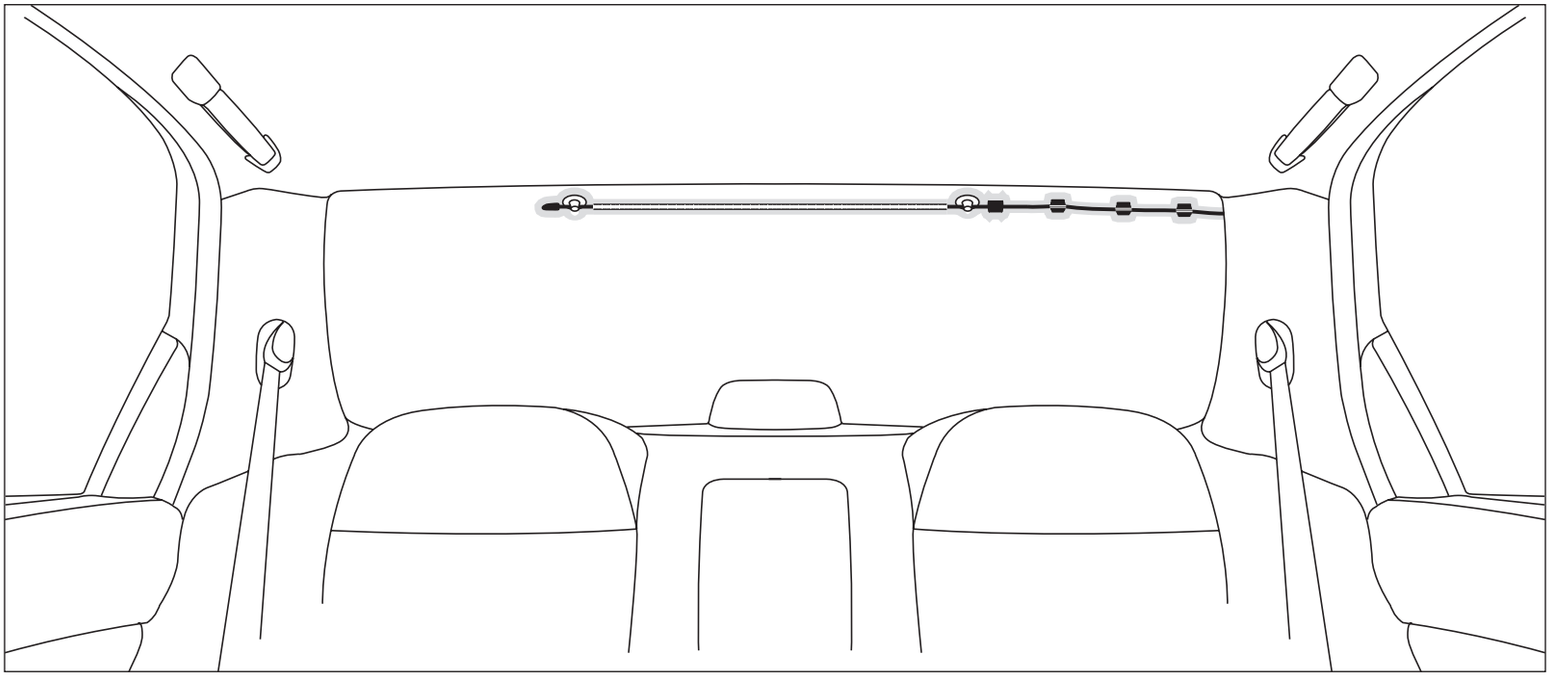

**Figure 18**

c. **<u>Installation Instructions for Vehicles with On Glass Type FM Antenna.</u>**
For vehicles where the FM radio antenna is located on the window glass, the FM Extender Antenna can be mounted horizontally on the glass, directly over the FM radio antenna, or installed into the headliner of the vehicle directly above the FM antenna.

- If you are installing the FM Extender Antenna on the window glass, attach the suction cups to the glass centered over the FM radio antenna in a horizontal orientation. The wire between the two suction cups should be pulled taut and as straight as possible, and should not obstruct the driver's view. (Figures 19 & 20)
- If you are installing the FM Extender Antenna into the headliner, remove the suction cups and tuck the wire into the headliner, stretched taut and straight, and centered above the FM antenna.

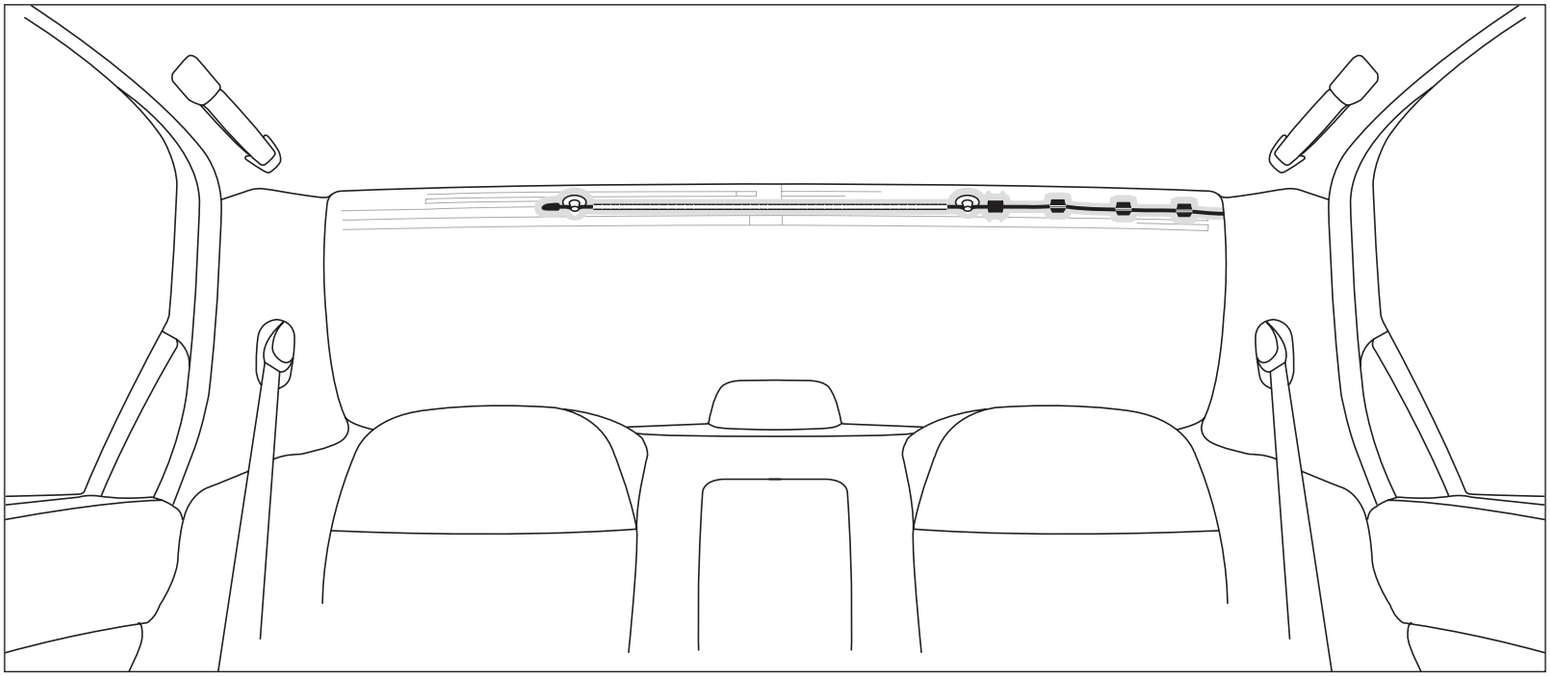

**Figure 19**

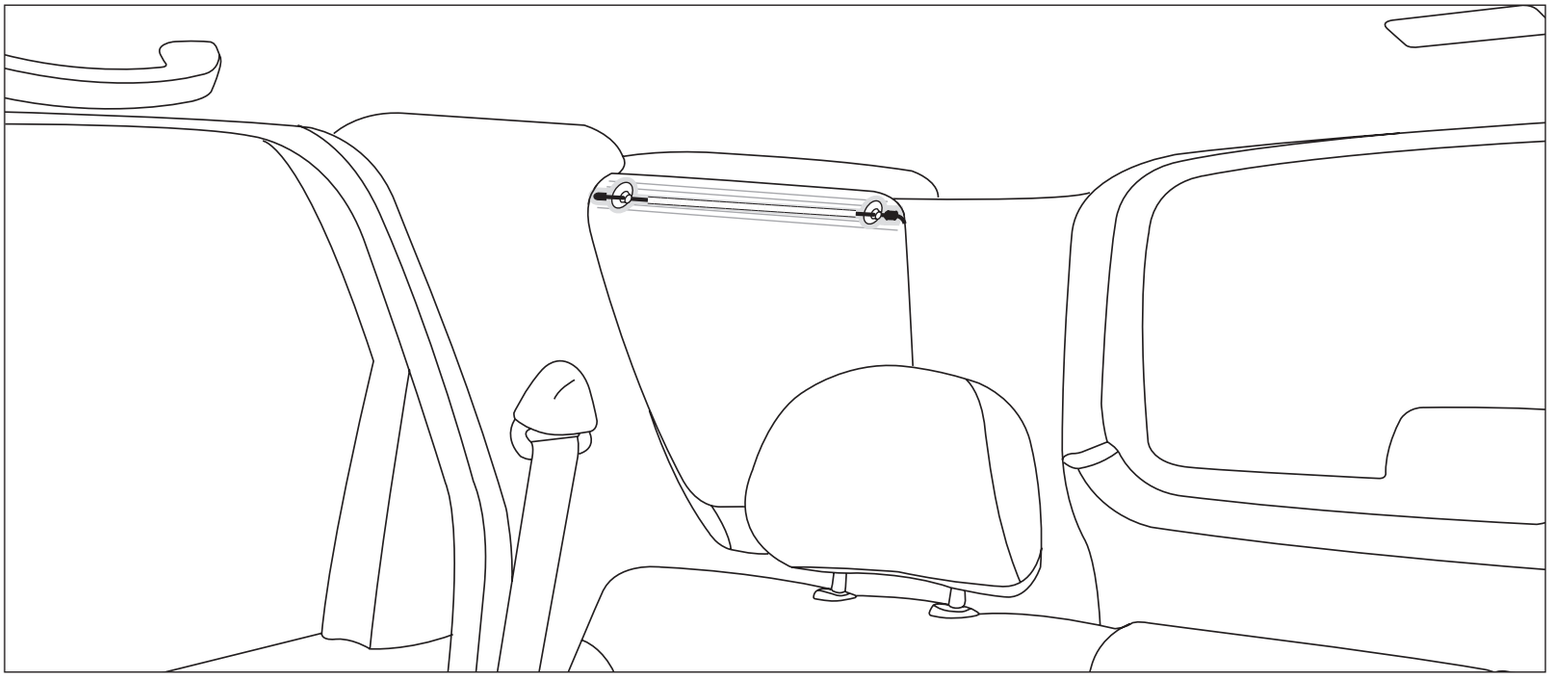

**Figure 20**

**d. <u>Installation Instructions for Vehicles with Shark Fin Type FM Antenna.</u>** For vehicles where the FM radio antenna is located on the rear of the roof of the vehicle, the FM Extender Antenna should be mounted horizontally on the glass below the FM antenna, or installed into the headliner of the vehicle under the FM antenna.

- If you are installing the FM Extender Antenna on the window glass, attach the suction cups to the glass below the FM antenna in a horizontal orientation. (Figure 21) The wire between the two suction cups should be pulled taut and as straight as possible, and should not obstruct the driver's view.
- If you are installing the FM Extender Antenna into the headliner, remove the suction cups and tuck the wire into the headliner, stretched taut and straight, and centered under the FM antenna.

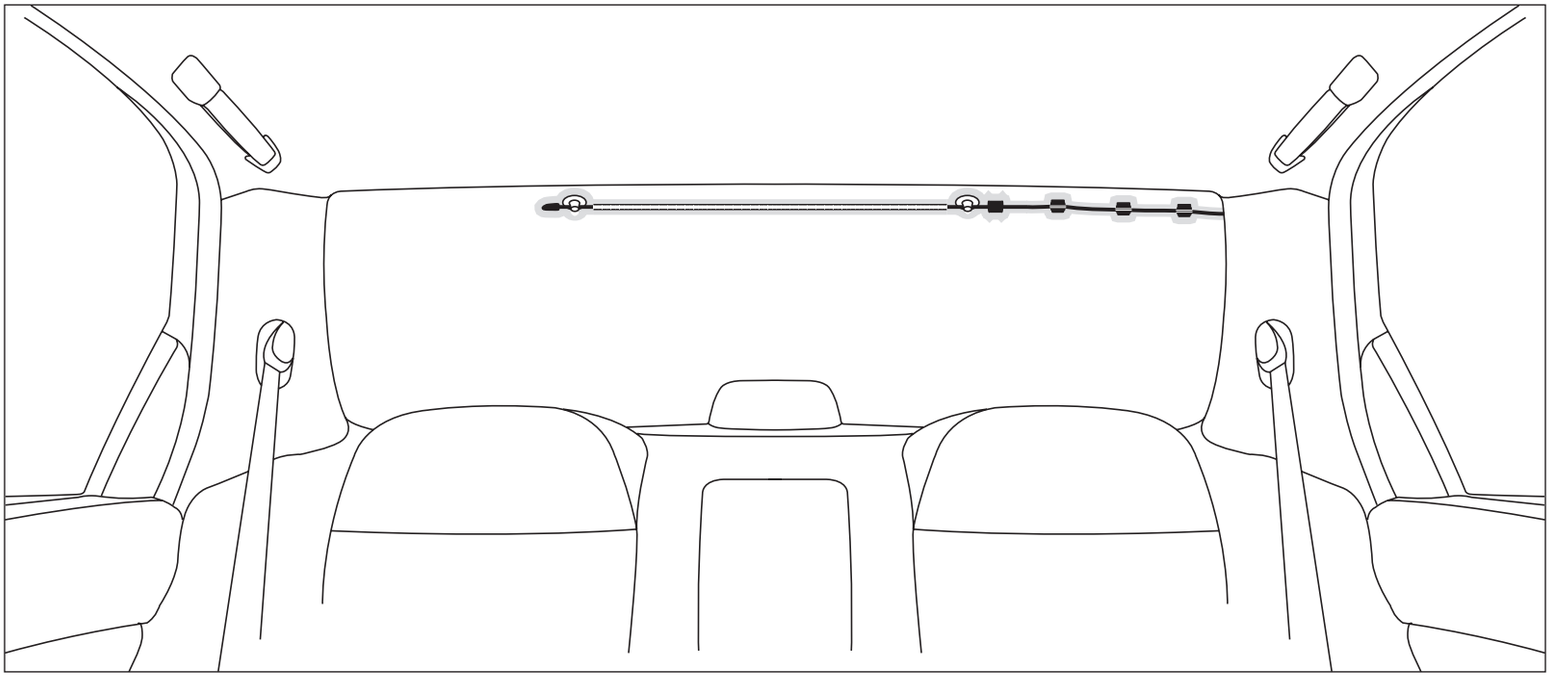

**Figure 21**

3. Plug the FM Extender Antenna into the **FM OUT** connector of the vehicle dock. (Figure 22)

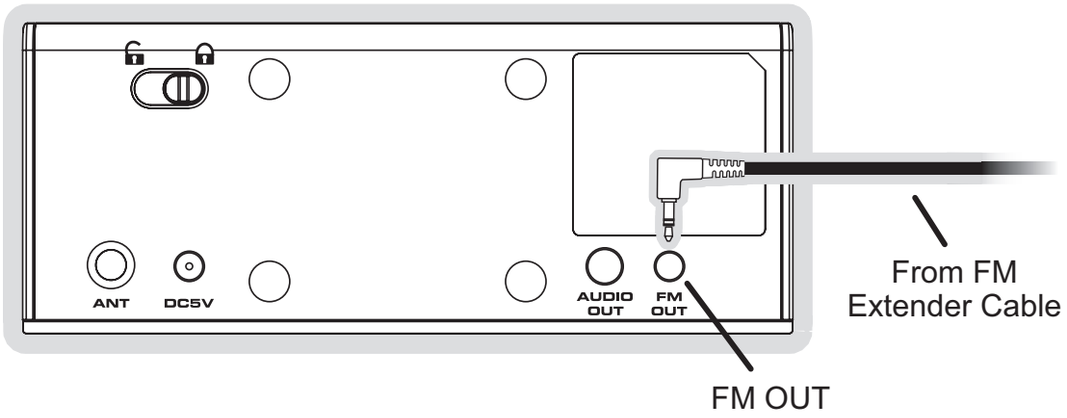


**Figure 22**

4. Tune your vehicle's FM radio and your SIRIUS radio to the same FM channel (Figure 23):
   a. Turn off your SIRIUS radio and tune through the FM channels on your vehicle's radio to locate an FM channel that is not broadcasting in your area. If you use an FM channel that is being used by a local broadcaster, it will interfere with the performance of your SIRIUS radio. Once you have located an FM channel that is not broadcasting in your area, save it as a preset on your vehicle radio. This will become your SIRIUS preset.

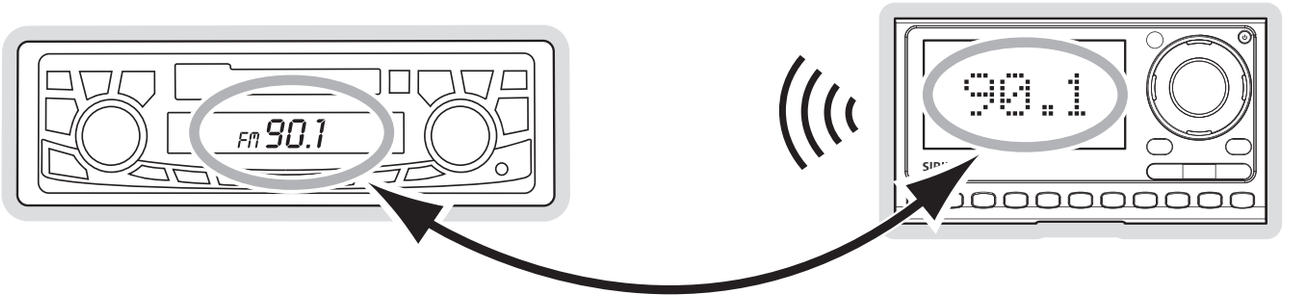


**Figure 23**

   b. Turn on your SIRIUS radio. In the *Settings* or *Menu* in your SIRIUS radio, locate the ***FM Frequency*** menu. Set the channel number on your SIRIUS radio to match the SIRIUS preset on your vehicle's radio. Refer to the user guide which accompanied your SIRIUS radio for detailed instructions on how to do this.

**Note:** The FM transmitter in your SIRIUS radio is automatically set to FM channel 88.1. This may not be the best channel in your area.

**Tip:** If you regularly travel between cities with different active FM channels, you may need to find channels that are not broadcasting in each city. Several SIRIUS radio models can store multiple FM transmit channels, so you can easily switch to the best FM channel for each city. Refer to your user guide for details on this feature. You will also want to set the FM channels that are not broadcasting in each city as presets on your vehicle's radio.

5. You should now hear the audio from your SIRIUS radio over your vehicle's FM radio. If the audio quality is not satisfactory, try moving the FM Extender Antenna slightly to see if a better signal can be obtained.
6. *If you are mounting the FM Extender Antenna in the headliner of the vehicle, skip this step.* When you are satisfied with the mounting location, remove the suction cup mounts and peel the backing off the adhesive mounts. Permanently adhere it in the same position on the glass (or A-Pillar), keeping it taut and as straight as possible. (Figure 24)

**Figure 24**

7. Route the antenna cable to your SIRIUS radio. Use the included self adhesive cable guides (if necessary) to hold the antenna wire in place until it reaches the weather stripping or moulding at the edge of the window. Take advantage of any existing cable channels or wiring conduits and route the cable around the passenger compartment to the vehicle dock. Take care not pull the cable across sharp edges that could damage it, and keep it away from areas where it might entangle feet. Coil and secure any excess antenna cable in a location where it can be hidden and secured.
8. Plug the FM Extender Antenna into the **FM OUT** connector of the vehicle dock (Refer to Figure 22 on page 31.)

This completes the installation of the FM Extender Antenna. If you're not sure which FM channels are not broadcasting in your home or travel cities, you can also go to **http://sirius.com/fmchannel** and search for a suggested FM channel based on your zip code.

## DIRECT CONNECTIONS

Direct connection provides better audio performance than a wireless connection and removes the possibility of interference from local FM broadcasters.

### Direct Wired Audio Connection

If your vehicle radio offers an “AUX IN” or “LINE IN” connection, it is the best audio connection available. If the “AUX IN” or “LINE IN” connector is located on the front of your vehicle radio, this is also the easiest connection. (Figure 25)

1. Purchase an audio cable that matches the connection type of your vehicle radio and your SIRIUS radio at your local electronics retailer. Your SIRIUS radio requires a 1/8” stereo male connector. Your local electronics retailer can help you determine the proper connection for your car radio.
2. Plug one end of the cable into the “AUDIO OUT” or “LINE OUT” jack on your SIRIUS radio. Plug the other end into your “AUX IN” or “LINE IN” jack on your vehicle radio.

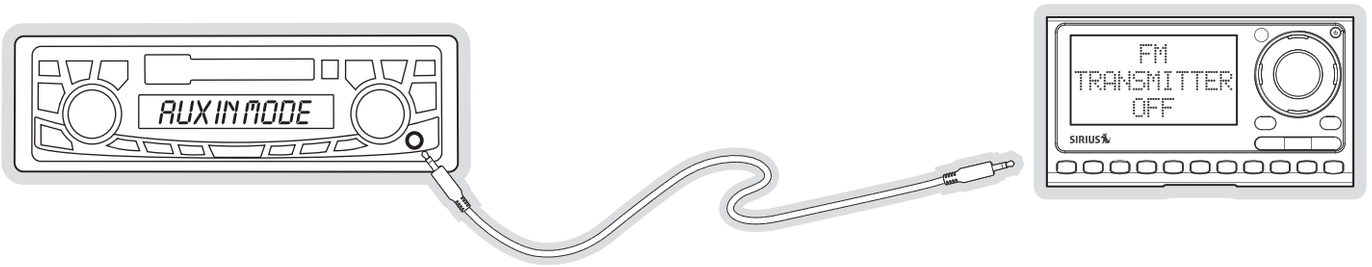


**Figure 25**

**Note:** Refer to your vehicle radio manufacturer’s guidelines for correct installation.

**Note:** If the “AUX IN” or “LINE IN” connection is on the back of your vehicle radio, you may want to consider professional installation. (Figure 26)

**Figure 26**

**Cassette Adapter**

If your vehicle radio has a cassette player:

1. Purchase a Cassette Adapter at your local electronics retailer.
2. Connect the adapter between the “AUDIO OUT” or “LINE OUT” on your SIRIUS radio and the vehicle radio’s cassette slot. (Figure 27)

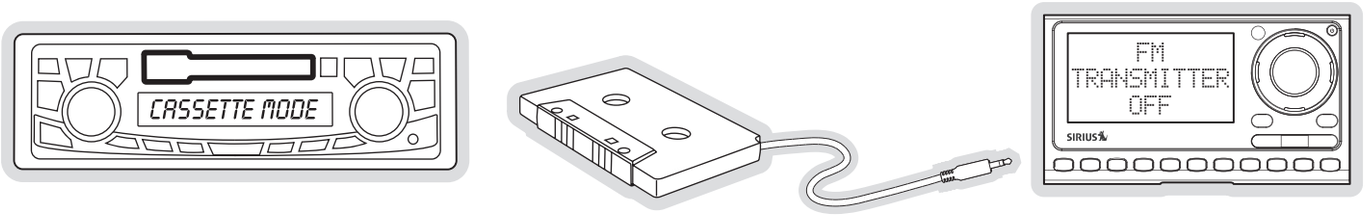


**Figure 27**

**Note:** Refer to the cassette adapter manufacturer’s guidelines for correct use.

**SIRIUS FM Direct Adapter**

If your vehicle radio does not have an “AUX IN” or “LINE IN” jack, the SIRIUS FM Direct Adapter provides a wired connection between your SIRIUS radio and your vehicle radio, eliminating the outside static and interference you sometimes experience when using a wireless FM connection. (Figure 28)

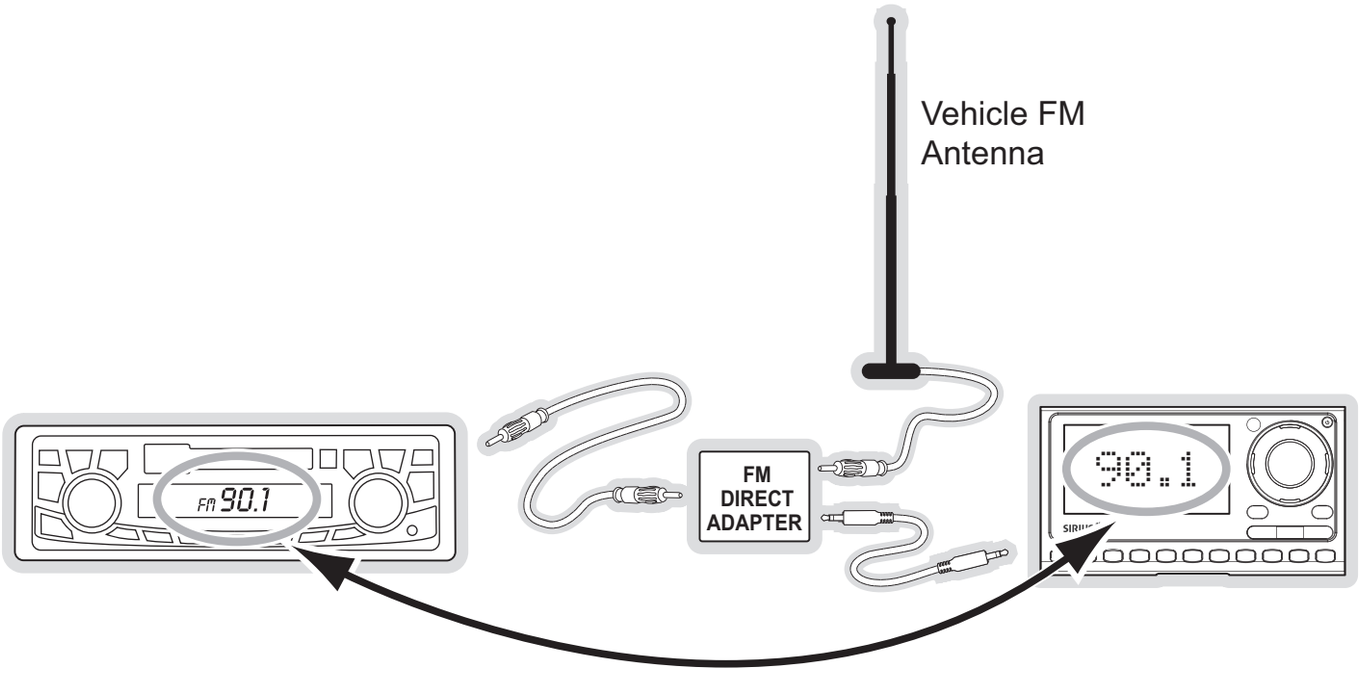


**Figure 28**

Professional installation may be required. See your local SIRIUS retailer.

For the latest information refer to **http://www.sirius.com/vehicleinstallation**. (The SIRIUS FM Direct Adapter is available at your local SIRIUS retailer or at **http://shop.sirius.com**).

# Subscribing to the SIRIUS Service

Before you can listen to the SIRIUS service, you need to subscribe to the SIRIUS Satellite Radio service. To subscribe, do the following:

1. Be sure that the SIRIUS radio is correctly installed, is in the vehicle or home dock, and that the antenna is oriented to receive the SIRIUS signal.
2. Turn on the radio. After the startup sequence, it will update the SIRIUS channel line-up. Wait until the channel updates have completed before pressing any buttons.
3. Once the channels have been updated, the display will change to *Call 1-888-539-SIRIUS to Subscribe* and will tune to channel 184. You will not be able to listen to other channels until you activate your SIRIUS subscription.
4. Use the radio's channel up/down buttons to tune to channel **0** to display the radio's unique 12-digit SIRIUS ID Number (SID). (Figure 1) You can also tune to channel **0** by using the remote control: Press the **Select** button then the **0** (zero) button and then press the **Select** button again. The SID number is also available on the radio's packaging, and may also be accessed by pressing the **MENU** button and selecting *Sirius ID*. Write the SID number down in the space provided near the end of this guide.
5. Have your credit card handy and contact SIRIUS on the Internet at:
   **https://activate.siriusradio.com/**
   and follow the prompts to activate your subscription. You can also call SIRIUS toll-free at: **1-888-539-SIRIUS** (1-888-539-7474).
6. When you have successfully subscribed to the SIRIUS service, and the radio has been updated with your subscription information, an alert will be displayed. To continue, press the **Select** button.

You are now ready to begin enjoying SIRIUS Satellite Radio's digital entertainment, and can tune to other channels!

# Troubleshooting

| Symptom | Solution |
|---|---|
| SIRIUS radio does not power on | Blown fuse, or the Cigarette Lighter Adapter is not properly connected.<br>Check the Cigarette Lighter adapter connection. Refer to the vehicle's owners manual for the location of the vehicle's fuse panel and check for a blown fuse. |
| SIRIUS radio displays: *Antenna Not Detected* | The satellite antenna is not connected to the vehicle dock.<br>Check the satellite antenna connection to the vehicle dock. |
| SIRIUS radio displays: *Acquiring Signal* | No satellite signal is being received.<br>Check for obstacles over or around the satellite antenna.<br>Change the vehicle location to eliminate nearby obstacles (bridges, overpasses, tress, buildings, etc). |
| Audio static or loss of clarity | The FM frequency contains static.<br>Locate a quiet FM frequency on your vehicle radio and set the FM transmitter frequency of the SIRIUS radio to match.<br>If using the Audio Out connector, check the cable connections. |
| No sound | The audio cables are not connected, or the FM radio is set to the wrong frequency. Check the audio cables at the radio and the radio. Verify that the FM transmitter in the radio is set to On. Tune the FM radio to the same FM frequency to which the radio is tuned. |

# Optional Accessories

The following optional accessories are available for purchase from your SIRIUS retailer to maximize your SIRIUS experience:

**SUBX1 SIRIUS Plug and Play Universal Boombox**

The SUBX1 SIRIUS Plug and Play Universal Boombox is a portable docking station and audio system for use with the SIRIUS radio. With the built-in amplifier and speakers, the boombox delivers rich, powerful sound indoors or outdoors, and features an auxiliary input for other audio devices.

Included with the boombox is an adjustable indoor/outdoor windowsill antenna with 20' of cable and an AC adapter.

**SUPH1 SIRIUS Universal Plug and Play Home Kit**

The SUPH1 SIRIUS Universal Plug and Play Home Kit is a compact home dock that positions the radio for easy viewing and operation. Designed for quick and easy self-installation, it includes all necessary cabling to connect your SIRIUS radio to your home audio system.

The kit includes a compact tabletop/desktop home dock with FM output for wireless connectivity, an audio cable for connection to any stereo bookshelf system, an adjustable indoor/outdoor windowsill antenna with 20' of cable, and an AC Adapter.

# Warranty

**12 Month Warranty**

SIRIUS Satellite Radio Inc. (the "Company") warrants to the original retail purchaser of this product that should this product or any part thereof, under normal use and conditions, be proven defective in material or workmanship within 12 months from the date of original purchase, such defect(s) will be repaired or replaced with new or reconditioned product (at the Company's option) without charge for parts and repair labor. To obtain repair or replacement within the terms of this Warranty, the product is to be delivered with proof of warranty coverage (e.g. dated bill of sale), specification of defect(s), transportation prepaid, to the location shown below under WARRANTY RETURN.

This Warranty does not extend to the elimination of externally generated static or noise, to correction of antenna problems, to costs incurred for installation, removal or reinstallation of the product, or to damage to tapes, compact discs, speakers, accessories, or vehicle electrical systems.

This Warranty does not apply to any product or part thereof which, in the opinion of the Company, has suffered or been damaged through alteration, improper installation, mishandling, misuse, neglect, accident, or by removal or defacement of the factory serial number/bar code label(s). THE EXTENT OF THE COMPANY'S LIABILITY UNDER THIS WARRANTY IS LIMITED TO THE REPAIR OR REPLACEMENT PROVIDED ABOVE AND, IN NO EVENT, SHALL THE COMPANY'S LIABILITY EXCEED THE PURCHASE PRICE PAID BY PURCHASER FOR THE PRODUCT.

This Warranty is in lieu of all other express warranties or liabilities. ANY IMPLIED WARRANTIES, INCLUDING ANY IMPLIED WARRANTY OF MERCHANTABILITY, SHALL BE LIMITED TO THE DURATION OF THIS WRITTEN WARRANTY. ANY ACTION FOR BREACH OF ANY WARRANTY HEREUNDER INCLUDING ANY IMPLIED WARRANTY OF MERCHANTABILITY MUST BE BROUGHT WITHIN A PERIOD OF 48 MONTHS FROM DATE OF ORIGINAL PURCHASE. IN NO CASE SHALL THE COMPANY BE LIABLE FOR ANY CONSEQUENTIAL OR INCIDENTAL DAMAGES FOR BREACH OF THIS OR ANY OTHER WARRANTY, EXPRESS OR IMPLIED, WHATSOEVER. No person or representative is authorized to assume for the Company any liability other than expressed herein in connection with the sale of this product. Some states do not allow limitations on how long an implied warranty lasts or the exclusion or limitation of incidental or consequential damage so the above limitations or exclusions may not apply to you. This Warranty gives you specific legal rights and you may also have other rights which vary from state to state.

WARRANTY RETURN: To obtain repair or replacement within the terms of this Warranty, please return product to an authorized retailer or call Customer Service at 1-800-869-5187; proof of purchase and description of defect are required. Products to be returned to an approved warranty station must be shipped freight prepaid.

# Specifications

| | |
|---|---|
| Cigarette Lighter Adapter Fuse Requirement | 2A Slow Blow |
| Cigarette Lighter Adapter Cable Length | 1.8m (6ft.) |
| Cigarette Lighter Adapter Operating Temperature | -20° to +85° C (-4° to +185° F) |
| Vehicle Dock Power Requirements | 10-16 Volts, Negative Ground, DC |
| Antenna Type | Low Profile Magnetic |
| Antenna Cable Length | 21’ (single micro-cable) |
| Connector Type | SMB (right-angle) |
| Audio Out Interface | 1/8” / 3.5mm Stereo Jack |

# SIRIUS ID

Write down the SIRIUS ID (SID) of your SIRIUS radio in the space provided below.

SID: _____

SIRIUS®
SATELLITE RADIO

THE BEST RADIO ON RADIO™

**SIRIUS Customer Service:** 1-888-539-7474
customercare@sirius-radio.com

**SIRIUS Satellite Radio Inc.**
1221 Avenue of the Americas
New York, NY 10020
1-888-539-7474
http://www.sirius.com

**SIRIUS Satellite Radio Inc.**
1221 Avenue of the Americas
New York, NY 10020
(800) 869-5590
http://sirius.com

SIRIUS®
SATELLITE RADIO
THE BEST RADIO ON RADIO™