SpotCell™ 100 SERIES
USER MANUAL

Affordable, reliable In-building wireless coverage solutions.

Technical Support

The SpotCell™ serial number must be available to authorize technical support and/or to establish a return authorization for defective units. The serial number is located on the back of the Coverage Unit (CU) and Donor Unit (DU) as well as the box in which they were delivered. Additional support information may be obtained by accessing the SpotwaveWireless Inc. website at www.spotwave.com. To contact support by telephone, call your local Spotwave vendor, or if you are unable to reach your vendor, contact Spotwave Wireless at 1-877-610-9586.

Important Safety Information

Warning! For your safety, beware of power lines and ensure appropriate safety measures are maintained at all times during the installation of the SpotCell equipment. If equipment not shipped with the SpotCell system is to be used during installation or mounting, follow all equipment manufacturer's instructions in proper use to ensure injury is avoided.

The DU and CU of the SpotCell are low power transmitters. As with a cell phone antenna, avoid unneccessary contact with the front of the units after installed. Mount the units in a location where people will not approach within 1 meter of the front of the DU and 20 centimeters in front of the CU.

When deploying the extended coverage antenna, there must be a minimum separation of 10 cm between the main CU and the extended coverage antenna with the antennas facing in opposite directions. The extended coverage antenna should be mounted in locations where people will not approach within 20 cm in front of the antenna.

This manual outlines installation instructions and the appendix offers practical safety tips (see page 43 entitled 'Safety Hints').

If you are not sure about a safe installation, do not attempt to install it yourself. Call a professional installer for help.

LIMITED WARRANTY AND LIMITATION OF LIABILITY:

1. What is Covered and for How Long? Spotwave Wireless Inc. ("Spotwave") warrants to the original Purchaser that the Spotwave SpotCell System (the "System") is free from defects in material and workmanship under normal use and service for a period of 12 months from the date of shipment from Spotwave (the "Limited Warranty Period").

2. What is not covered? This Limited Warranty is conditioned upon proper use of the System by the Purchaser. This Limited Warranty does not cover (and will become null and void in the event of): (a) defects or damage resulting from accident, misuse, abuse, neglect, unusual physical, electrical or electromechanical stress, modification of the System or any part thereof, or cosmetic damage; (b) removal, alteration or defacing of the serial number or other identifying marks on the System; (c) all plastic surfaces and other externally exposed components that are scratched or damaged due to normal use; (d) malfunctions resulting from the use of the System in conjunction with accessories, products or (ancillary) or peripheral equipment not provided by Spotwave; or (e) defects or damage from unauthorized or improper testing, operation, maintenance, installation, servicing or adjustment of the System. Any repairs or replacements provided by Spotwave outside of the Limited Warranty Period (including repairs to or replacement after the end of the Warranty Period), or in excess of the services provided during the Limited Warranty Period, will subject to Spotwave's then prevailing rates.

3. What are Spotwave's Obligations and how do you make a claim? During the Limited Warranty Period, Spotwave will repair or replace, at Spotwave's sole option, without charge to Purchaser, any defective component of the System, provided that the System is returned promptly upon discovery of the defect and during the Limited Warranty Period. To obtain service, Systems must be returned to an authorized service facility in the original packaging or packaging adequate for shipping, accompanied by Purchaser's sales receipt or comparable substitute proof of sale showing the date of purchase and the serial number of the System. A valid RMA is required prior to any return.
To locate your nearest authorized service facility, call Spotwave Customer Service at 1-877-610-9586.
Spotwave may, at Spotwave's sole option, use rebuilt, reconditioned, or new parts or components when repairing any System or replace a System with a rebuilt, reconditioned or new System. Repaired Systems will be warranted for a period equal to the remainder of the original Limited Warranty Period for the original System or for 90 days, whichever is longer. All replaced parts, components, boards or equipment shall become the property of Spotwave. If Spotwave determines that any System is not covered by this Limited Warranty, Purchaser must pay the costs for all parts, shipping, and labor charges for the repair or return of such System.

4. What are the Limits on Spotwave's Liability? EXCEPT FOR THE WARRANTY IN PARAGRAPH 1, THE SYSTEMS AND ANY ASSOCIATED SERVICES ARE PROVIDED BY SPOTWAVE ON AS 'AS IS' BASIS AND THERE ARE NO OTHER REPRESENTATIONS, WARRANTIES OR CONDITIONS, ,EXPRESS OR IMPLIED, WRITTEN OR ORAL, ARISING BY STATUTE, OPERATION OF LAW, COURSE OF DEALING, USAGE OF TRADE OR OTHERWISE, REGARDING THEM OR ANY OTHER PRODUCT OR SERVICE PROVIDED HEREUNDER OR IN CONNECTION HEREWITH BY SPOTWAVE. SPOTWAVE DISCLAIMS ANY IMPLIED WARRANTIES OR CONDITIONS OF DURABILITY, MERCHANT ABILITY, MERCHANTABLE QUALITY, SATISFACTORY QUALITY, NON-INFRINGEMENT OR FITNESS FOR A PARTICULAR PURPOSE. SPOTWAVE DOES NOT REPRESENT OR WARRANT THAT THE SYSTEMS WILL MEET ANY OR ALL OF PURCHASERS' PARTICULAR REQUIREMENTS, THAT THE SYSTEMS WILL OPERATE ERROR-FREE OR UNINTERRUPTED OR THAT ALL ERRORS OR DEFECTS IN THE SYSTEMS CAN BE FOUND TO BE CORRECTED. System performance is dependant upon the performance and availability of services or technology provided by third parties and Spotwave is not responsible for service continuity and reliability, reception, or other performance related limitations associated with use of the Systems. NO AGREEMENTS VARYING OR EXTENDING THE TERMS OF THIS LIMITED WARRANTY WILL BE BINDING ON SPOTWAVE UNLESS IN WRITING AND SIGNED BY AN AUTHORIZED SIGNING OFFICER OF SPOTWAVE THIS LIMITED WARRANTY SHALL NOT EXTEND TO ANYONE OTHER THAN THE ORIGINAL PURCHASER OF THE SYSTEM. SPOTWAVE'S MAXIMUM AGGREGATE LIABILITY TO PURCHASER SHALL NOT EXCEED THE AMOUNTS PAID BY PURCHASER FOR THE SYSTEM GIVING RISE TO THE CLAIM. SPOTWAVE SHALL NOT BE LIABLE FOR ANY SPECIAL, INCIDENTAL, CONSEQUENTIAL, INDIRECT OR SIMILAR DAMAGES, LOSS OF USE, DATA OR PROFITS, DAMAGES TO PURCHASER'S PROPERTY, OR INJURY TO PURCHASER OR OTHERS ARISING OUT OF THE USE, MISUSE OR INABILITY TO USE ANY SYSTEM, WHETHER OR NOT SUCH DAMAGE ARISES OUT OF CONTRACT OR TORT (INCLUDING WITHOUT LIMITATION, NEGLIGENCE) OR CLAIMS BY A THIRD PARTY, EVEN IF SPOTWAVE HAS BEEN ADVISED OF SUCH DAMAGES OR THEY ARE FORESEEABLE

5. This Limited Warranty allocates risk between Purchaser and Spotwave, and the Spotwave System pricing reflects this allocation of risk and the limitations of liability contained in this Limited Warranty. The agents, employees, distributors, dealers or representative of Spotwave are not authorized to make modifications to this Limited Warranty, or make additional warranties binding on Spotwave. Accordingly, additional statements such as advertising or presentations, whether oral or written, do not constitute warranties by Spotwave and should not be relied upon.

1.1 OWNERSHIP AND RISK OF LOSS:

6. Who Owns the rights in the System? The System is protected by Canadian, US and international copyright law and other intellectual property protection laws and treaties. Purchaser acknowledges that Spotwave and its licensors are the owner of all intellectual property, including, without limitation, patents and copyright,

relating to the System and the trademarks used in association with the System. Purchaser agrees that it will not (and will not attempt to) modify, prepare derivative works of, reverse engineer, decompile, disassemble, or other attempt to derive the source code of any software contained within the System.

7. Who bears the Risk of Loss? Risk of loss for the System passes to Purchaser upon the delivery to Purchaser or to a carrier for shipment, which ever is earlier. Title to the Systems (excluding any software) will pass upon payment in full for the Systems. Title to any software shall always remain with Spotwave or its licensors. As security for payment, Purchaser grants to Spotwave a purchase money security interest in the Systems (together with any proceeds, including insurance proceeds) and agrees that a copy of this letter of agreement or any other appropriate document may be registered as required to perfect the security interest granted. Systems may be resold by Purchaser in normal course of business, but until paid for in full, Purchaser will not pledge or otherwise encumber the Systems. Purchaser agrees to immediately report to Spotwave, any seizure or attachment of the Systems by creditors; (ii) any petition in bankruptcy, insolvency, receivership or similar proceedings filed by, or against Purchaser; or (iii) any arrangement, composition or similar agreement for the benefit of creditors. Systems held for Purchaser by Spotwave are at Purchaser's sole risk and expense.

OTHER TERMS:

8. What terms govern our relationship? These terms and any software license or warranty documentation accompanying the Systems constitute the complete and exclusive statement of the terms and conditions between us regarding the Systems and cannot be altered, amended or modified except in writing executed by Spotwave. This letter of agreement and any disputes arising hereunder shall be governed by and interpreted in accordance with the laws of the Province of Ontario, Canada. The United Nations Convention on Contracts for the International Sale of Goods and any legislation implementing such Convention, if otherwise applicable is expressly excluded. Any terms and conditions of any purchase order or other instrument issued by Purchaser which are in addition to or inconsistent with the terms and conditions of this letter of agreement shall not be binding and shall not apply, even if accepted by Spotwave.

MANUAL DISCLAIMER

Product specifications, pricing, packaging, technical support and information ("Specifications") and all claims, features, representations, and/or comparisons provided are correct to the best of our knowledge of the date of publication, but may contain errors or omissions and are subject to change without notice.

INFORMATION IS PROVIDED BY SPOTWAVE WIRELESS INC. ON AN "AS IS" BASIS, WITHOUT ANY OTHER WARRANTIES OR CONDITIONS, EXPRESS OR IMPLIED, INCLUDING, BUT NOT LIMITED TO, WARRANTIES OF MERCHANTABLE QUALITY, SATISFACTORY QUALITY, MERCHANTABILITY OR FITNESS FOR A PARTICULAR PURPOSE, OR THOSE ARISING BY LAW, STATUTE, USAGE OF TRADE, COURSE OF DEALING OR OTHERWISE. THE ENTIRE RISK AS TO THE RESULTS OF THE INFORMATION PROVIDED IS ASSUMED BY YOU. WE SHALL HAVE NO LIABILITY TO YOU OR ANY OTHER PERSON OR ENTITY FOR ANY INDIRECT, INCIDENTAL, SPECIAL, OR CONSEQUENTIAL DAMAGES WHATSOEVER, INCLUDING, BUT NOT LIMITED TO, LOSS OF REVENUE OR PROFIT, LOST OR DAMAGED DATA OR OTHER COMMERCIAL OR ECONOMIC LOSS, EVEN IF WE HAVE BEEN ADVISED OF THE POSSIBILITY OF SUCH DAMAGES, OR THEY ARE FORESEEABLE. WE ARE ALSO NOT RESPONSIBLE FOR CLAIMS BY A THIRD PARTY. OUR MAXIMUM AGGREGATE LIABILITY TO YOU AND THAT OF OUR DEALERS AND SUPPLIERS SHALL NOT EXCEED FOURTY DOLLARS. SOME STATES/COUNTRIES DO NOT ALLOW THE EXCLUSION OR LIMITATION OF LIABILITY FOR CONSEQUENTIAL OR INCIDENTAL DAMAGES, SO THE ABOVE LIMITATIONS MAY NOT APPLY TO YOU. All product, font and company names are trademarks or registered trademarks of their respective owners.

Table of Contents

Introduction 1
This manual 1
About Installation 1
Product Overview 1
Getting Started 3
Packing list - SpotCell 3
Unpacking and inspecting 5
Installation 7
Preparing for installation 7
Positioning the SpotCell DU (outward facing unit) 8
Installing the DU 9
Choosing a location for the SpotCell CU 11
Positioning the CU 12
Auxilliary Antenna 13
Mounting the DU 15
Running the cable through a wall 15
Mounting the DU 15
Mounting the CU 21
Display Information 23
Trouble Shooting Information 27
SpotCell 100 System Specifications 31
SpotCell 111 System Specifications 35
SpotCell 112 System Specifications 39
Safety Hints 43

1 – Introduction

1.1 This manual

The contents of this manual complements the Quick Install Guide, and provides specific details that may be referred to if necessary during installation of the SpotCell™ system.

1.2 About Installation

Installation of the SpotCell does not require any specialized technical knowledge.

The SpotCell can be installed by any person(s) with the ability to use a screwdriver, and in some situations may require the use of a ladder, drill, and additional related tools.

1.3 Product Overview

The purpose of the SpotCell is to enable personal wireless communications in specific locations within a wireless service area where cell phones do not work, or work poorly, for example inside a building, or at the cell boundary.

The SpotCell system receives signals from one or more wireless base stations and re-transmits the signal to areas where cell phones do not work or work poorly due to obstructions or the remoteness of the location

.

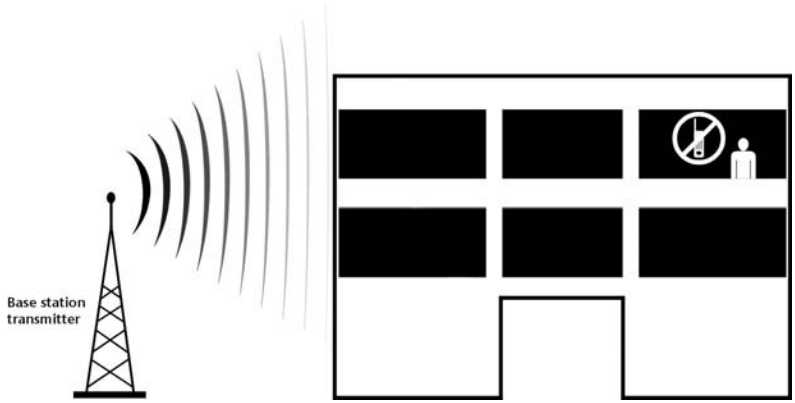

Figure 1.1: Base station signal does not reach wireless subscriber

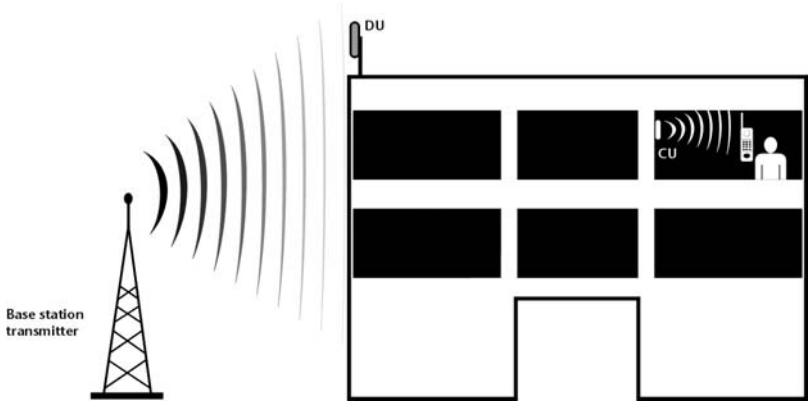

Figure 1.2: SpotCell improves wireless communications

2 – Getting Started

2.1 Packing list - SpotCell

The SpotCell is shipped in a single box containing:

- Donor Unit (DU) - this is the outward facing part of the system.
- Coverage Unit (CU) - this is the indoor part of the system.
- Power Adapter - to be plugged into an electrical outlet, and connected to the CU.
- Cable - used to connect the CU and DU together.
- Mounting Kit which includes:
  - angled brackets (3) for DU
  - 1/4” x 3/4” pan head screws (6)
  - 1/4” x 2” hex screws (2)
  - No. 10 x 2.5” wood screws (2)
  - No. 6 x 1.5” wood screws (20)
  - 1/4” lock nuts (4)
  - split lock washers (2)
  - hose clamps (2)
  - cable loop strap (10)
  - cable tie, black outdoor (10)

- screw anchors, plastic (10)
- screw anchors, concrete (10)
- drywall anchor (1)
- 1/4” screw anchor, concrete (2)
- caulking cord (1)

Note: Parts are provided for the majority of installation options, but do not cover all possibilities. You may need to purchase additional hardware specific to your mounting environment before you begin the installation. A tripod and mast would be typical additional equipment purchased for mounting the SpotCell DU on a rooftop.

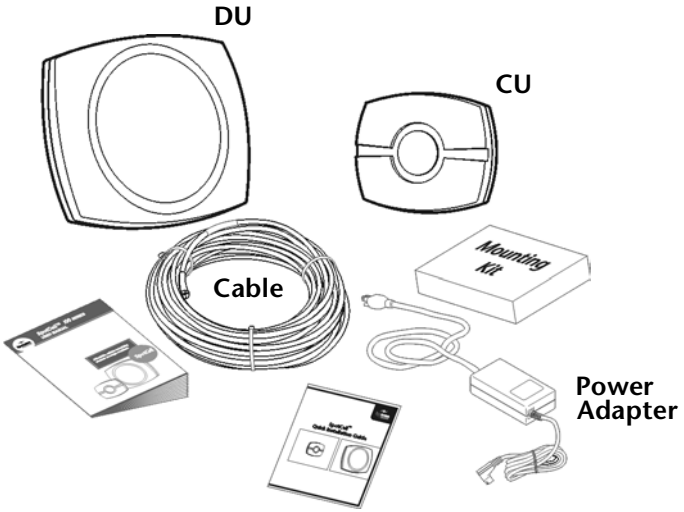

Figure 2.1: Components of the SpotCell package

2.2 Unpacking and inspecting

Physically inspect the box for shipping damage before unpacking the SpotCell.

1. Remove the SpotCell components from the box.
2. Remove all packing material from the Donor Unit (DU) and the Coverage Unit (CU). Save the packaging in case the SpotCell is ever stored or shipped to SpotWave for service.
3. Check the contents of the package to make sure you have received everything ordered and verify that the mounting kit contains all the listed parts.
4. Check the DU and CU for shipping damage. Pay particular attention to the unit's outer shell casing.

3 – Installation

3.1 Preparing for installation

The following are general considerations and preparations that should be looked at before installing the SpotCell.

3.1.1 Signal Strength

The SpotCell system brings signals from an area of adequate coverage to an area with poor or non-existent coverage. It is the DU which captures a good signal, and the CU that provides the signal to the area with poor cell phone coverage. The DU can be mounted inside or outside, as long as it is in an area where your cell phone works. Generally, the better your cell phone works at the location the DU is mounted, the better the system will perform.

3.1.2 DU Height

In fringe areas, locating the DU as high as possible will provide optimal performance.

3.1.3 Avoid obstructions

General placement of the DU and CU must be in unobstructed areas. For example, the CU should not be placed on a wall behind any type of furniture (behind items such as metal filing cabinets would be a particularly poor location). Similarly for the DU, the front of the unit should not be directly facing any type of metal structures, which are often found on building rooftops.

3.1.4 Proximity to power source

The indoor unit must be located within 20 feet of a power source.

3.1.5 Distance between DU and CU

Although you should separate the DU and CU as much as possible, there are only 25 meters of cabling provided to connect the two units. Make sure the general location of the two units is within 25 meters.

Note: An additional cable extension, made from copper core RG6 quad shield cable, may be inserted, to a maximum of 50 meters total length.

3.1.6 Orientation of DU relative to CU

If possible face the DU and CU in opposite directions, and back to back while maintaining maximum separation. While not a requirement, some installations will perform better if the units are positioned in this manner.

3.1.7 Barrier between DU and CU

The greater the physical obstruction between the DU and CU, the better the performance. Dense obstructions such as brick, concrete or metal walls are better than wooden or plaster walls.

3.2 Positioning the SpotCell DU (outward facing unit)

It may not be possible to install the DU indoors when installing the SpotCell in remote areas. An effort should be made to install the DU outdoors and the DU should be installed as high as possible when the installation is in a remote area,

3.2.1 Installing the DU

Three methods of positioning the DU (based on location) are outlined in the following procedure. Specifically they refer to installing inside buildings, on external walls, and on rooftops.

1. Position the DU (but do not mount it) as close to the final desired mounting location as possible. The CU does not have to be in its final location while positioning the DU and it is helpful to have the CU near the DU.

Indoors	Roof	External wall
While not strictly required, it is highly recommended the DU be installed facing a window when installed indoors.	The CU does not have to be in its final position at this time, but it should not be brought outdoors.	

2. Connect the DU and CU with the enclosed cable. Tighten the cable to the DU and CU with a wrench (a 1/4 of a turn tighter than finger tight) to ensure moisture does not penetrate.
3. Connect the power supply as shown below.

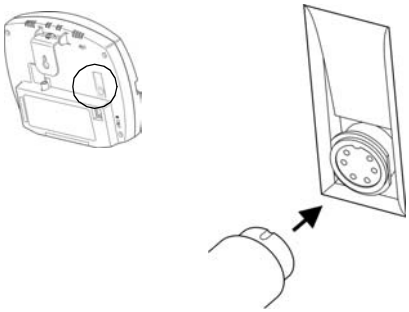

Figure 3.1: Connecting power supply to CU

4. Ensure the switch on the CU is in the 'Install' (1) position.

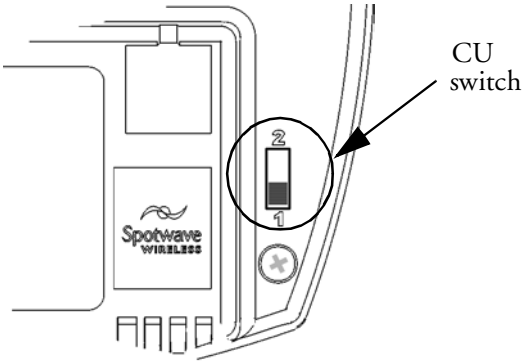

Figure 3.2: CU switch location

5. Plug the power supply adapter into a wall socket.
6. To align, hold the DU upright and:

Indoors	Roof	External wall
Rotate the face of the DU from left to right in front of the window. 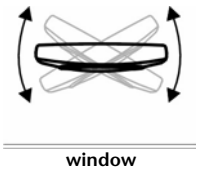 If not in front of a window, rotate the DU in a complete circle.	Rotate it in a full circle. A time of 10 seconds is appropriate to fully complete the rotation. 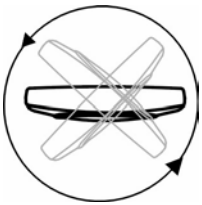	Rotate the face of the unit from left to right within the constraints allowed by the wall. 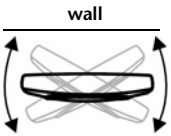

7. As you are rotating, you will notice that the LED on the back of the DU will light up green, red or amber; this is normal.

8. Again, rotate the DU as in step 6, this time stopping each time the LED is green and note the direction the DU is facing (the LED may turn green once or multiple times). This is an indication of the signal strength the DU is receiving from the wireless phone tower. The DU should be mounted facing the direction the DU was pointed when the LED was green for the longest period of time during its rotation.
9. For inside installation and exterior wall mountings, it is recommended that various walls and locations within the structure be tested as suitable locations to position the DU.

   For each location the DU is tested and the LED is green, the display on the bottom of the CU indicates the relative signal strength that the DU is receiving.

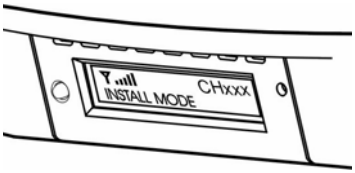

Figure 3.3: Displayed signal strength

   Mount the DU in the location that has the highest indicated signal level.

Note: On the upper floors of tall buildings, it may be necessary to tilt the DU down to get a good signal (green LED).

10. Proceed to page 15 for mounting instructions once the DU location has been optimized.

3.3 Choosing a location for the SpotCell CU

The CU should be optimized and mounted, after the DU has been optimized and mounted. Generally, the CU should be mounted in a location as far as possible from the DU, while being within the area where you require improved coverage.

If mounted on a ceiling, the unit should be downward facing, and in the center of the area requiring cell phone coverage.

If mounted on a wall, the unit should be positioned in the middle of the area to be covered side-to-side, and off-centered slightly front-to-back, approximately as shown below in Figure 3.4:"CU position and signal coverage". The unit should be mounted as high on the wall as possible.

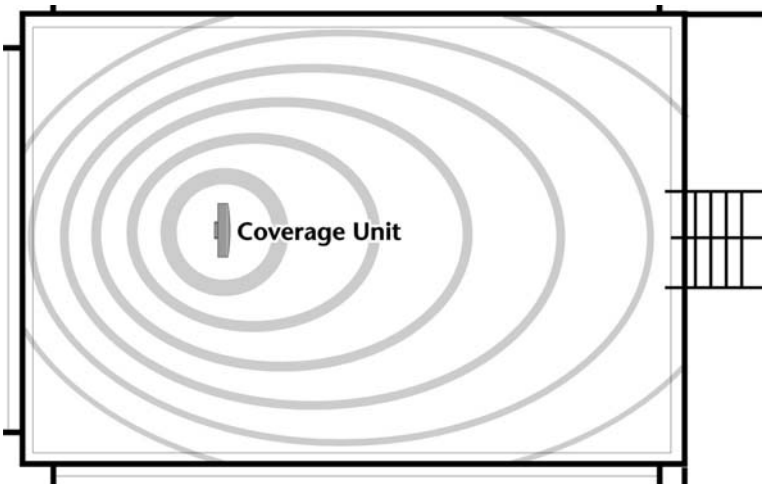

Figure 3.4: CU position and signal coverage

3.3.1 Positioning the CU

1. Ensure that the DU position has been optimized and has been mounted in place.
2. Move the switch on the CU from 'Install' to 'Active'.
3. Hold the CU in the position it is to be mounted. In an ideal application, the display on the CU will show 5 bars of signal strength and coverage area. If the display is not showing 5 bars for coverage area and there are alternate possible mounting locations, move the CU to the alternate locations and check the display. Place the CU in the location showing maximum number of bars (see Figure 3.5:"Displayed Signal Strength and Coverage Area"). In the event the number of bars is not changing, which is very possible, choose a location that is most convenient.

Note: Each time the CU is moved, wait approximately 25 seconds for the coverage area bars ( ) to stabilize.

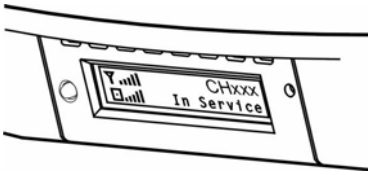

Figure 3.5: Displayed Signal Strength and Coverage Area

4. Refer to page 15 for mounting instructions.

3.4 Auxilliary Antenna

The SpotCell Coverage Extension kit (purchased seperately) can extend coverage into hard to reach places that are blocked by obstructions such as dense walls or shadowed by elevator shafts or ductwork

.

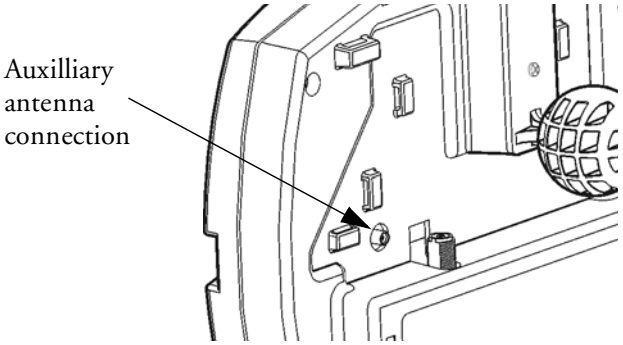

Instructions for connecting and mounting the auxilliary antenna are included in the Covergae Extension kit.

4 – Mounting the DU

All necessary hardware required for mounting on internal/external walls, or pipes is included in the mounting kit.

4.1 Running the cable through a wall

If it is necessary to run a cable through a wall, use a masonry or wood drill bit to drill a 5/8-inch diameter hole.

After passing the cable through, use the putty in the installation kit to fill the hole around the cable.

4.2 Mounting the DU

The DU may be indoor or outdoor mounted. Based on the direction the DU will point, consider possible mounting locations.

The illustrations on the following pages show some of the possible mounting options.

Note: Mount the angle bracket on the flanged side of the mounting bracket and use the two mounting holes if no horizontal movement is required.

4.2.1 Wall mounting

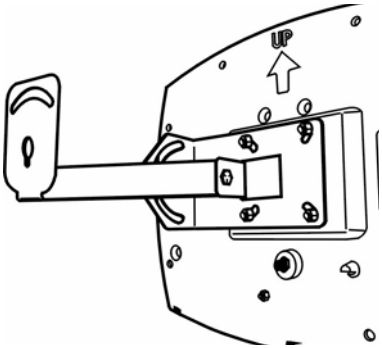

Figure 4.1: Wall mounting arrangement

This mounting allows for rotation and some upward tilt but mainly downward tilt.

4.2.2 Overhead mounting

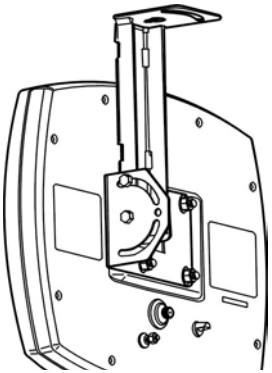

Figure 4.2: Overhead mounting arrangement

This mounting allows for rotation and some upward tilt but mainly downward tilt.

4.2.3 Horizontal surface mounting

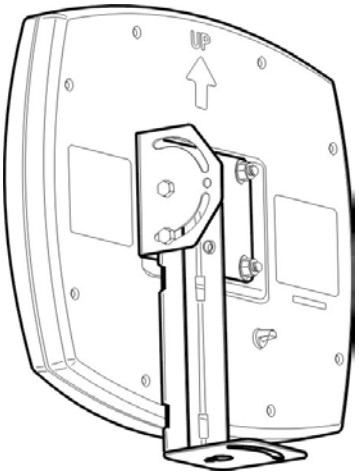

Figure 4.3: Horizontal mounting arrangements

These mountings allow for rotation and some downward tilt but mainly upward tilt.

4.2.4 Pipe mounting

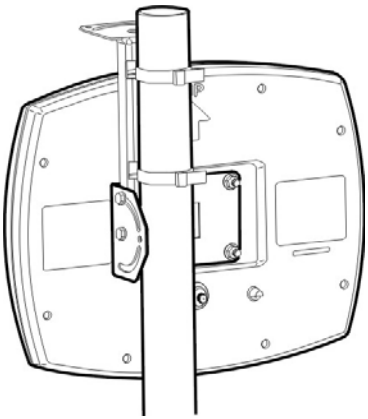

Figure 4.4: Pipe mounted DU

Use hose clamps to mount the unit to a pipe. The hose clamp range is 2" to 5". This mounting allows for rotation and limited up and down tilt.

4.3 DU outdoor mounting

4.3.1 Mounting to a wood structure

1. Use the holes in mounting bracket as a template and mark the hole locations. Mark two regular holes if no motion is required or the hole and the slot if motion is required.
2. Drill two .125" diameter holes approximately. 2.5" deep.
3. Install the DU using the two 1/4" lag bolts.

4.3.2 Mounting to a brick or concrete structure:

1. Use the holes in mounting bracket as a template and mark the hole locations. Mark the two regular holes if no motion is required or the hole and the slot if motion is required.
2. Use a masonry drill bit to drill two 5/16"diameter holes, 2 inches deep.
3. Insert masonry screw anchors so that the anchor is flush to mounting surface.
4. Install the DU using the two 1/4" lag bolts.

4.3.3 Mounting to a pipe or tubing:

Use the two stainless steel hose clamps supplied in the mounting kit for the following procedure.

1. Feed the end of the hose clamp through the holes as shown in Figure 4.4:“Pipe mounted DU”.
2. Rotate the unit to point the unit to the signal source and tighten clamps.

Note: DO NOT use cable ties to mount the DU.

4.3.4 Attaching the cable

While securing the cable, ensure that a drip loop is fashioned near the DU (to prevent water from collecting around the cable where it attaches to the DU) and secured in place as shown in Figure 4.5:"Drip loop" below.

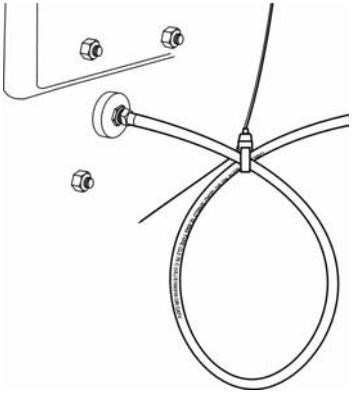

Figure 4.5: Drip loop

Fashion the drip loop and fasten a black tie wrap around the loop to keep the loop fastened.

To attach the cable to an existing pipe or cable run:

- Use tie-wraps to attach the cable to an existing pipe or cable run.

To attach the cable to wood or siding:

- Secure the cable to the wall using a cable loop strap as shown below. Mount the loop strap directly to the wall where possible using a #6 x 1.5" wood screw.

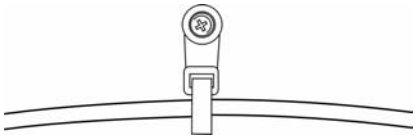

Figure 4.6: Cable strap

To attach the cable to a brick or concrete wall:

1. Drill a 3/16 diameter x 1 1/4 inch deep hole using a masonry drill bit.
2. Insert the anchor flush with the mounting surface.
3. Use cable clamps and screws to attach cable to the wall.

4.3.5 Bringing the cable indoors

To bring the cable indoors, it may be necessary to drill a hole through the wall.

To bring the cable through an exterior wall:

1. Depending on the material the wall is made of use a wood or masonry drill bit to drill a 5/8 inch diameter hole.
2. Pass the connector and cable through the wall.
3. Use the putty/sealant provided to fill the hole.

4.3.6 Grounding:

Ensure there is a connection to earth ground. Use an appropriate conductor connected from the stud on the DU to earth ground.

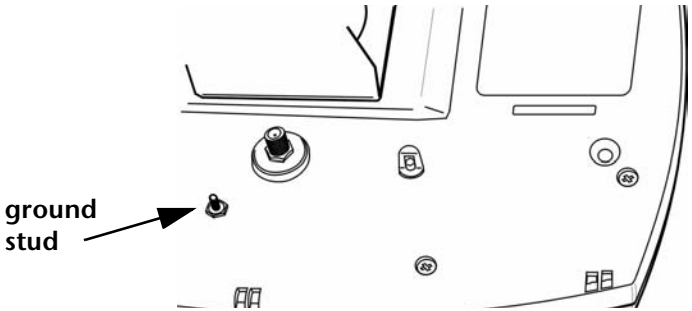

Figure 4.7: DU ground stud

Warning! Failure to properly ground the DU will leave the unit vulnerable to damage from lightning strikes. Check local building code requirements for lightning protection and comply with local regulations.

4.4 DU indoor mounting

To mount the DU indoors:

1. Use the mounting bracket as a template and mark the hole locations. Mark the two regular holes if no motion is required or mark the hole and the slot if motion is required.
2. If the mounting is in a solid wood surface, or a stud covered by drywall, drill a 5/32 inch diameter hole. Mount the unit with 2 inch wood screws.

   or

   If the mounting is in drywall, drill a ¼ diameter hole and insert an anchor. Mount the unit with 1/2 inch pan head screws.
3. Attach cables to the wall using tie wraps and mount directly to the wall where possible (using 1/2 inch pan head screws). If an anchor is required drill a 3/16 inch diameter hole, insert the anchor, and fasten with 1/2 inch pan head screws.

4.5 Mounting the CU

The CU can be surface mounted flat or you can attach the provided ball bracket as illustrated below. The bracket can be rotated to allow mounting to a ceiling or wall such that the face of the unit is parallel to the floor or ceiling, or positioned at any appropraite angle.

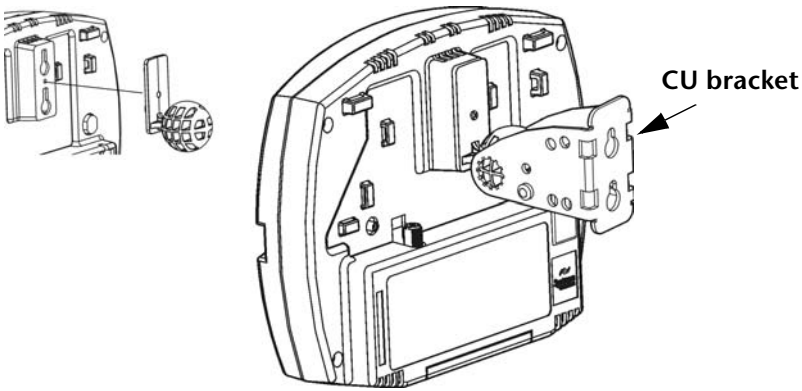

Figure 4.8: CU mounting bracket.

Mounting the CU

1. Find a suitable location to mount the unit that will provide good signal coverage. Refer to section 3.3“Choosing a location for the SpotCell CU”.
2. If mounting on a solid wood surface, or stud covered by drywall, drill a 1/8th inch diameter hole and mount with #6 x 1.5” screws.

   or

   If mounting in drywall, drill a ¼ inch diameter hole, insert the nylon screw anchor, and then mount with a 1/2” pan head screw.
3. Attach cables to the wall using tie wraps and mount directly to the wall where possible (using 1/2 inch pan head screws). If an anchor is required drill a 3/16 inch diameter hole, insert the anchor, and fasten with 1/2 inch screws.

5 – Display Information

5.1 DU (Donor Unit)

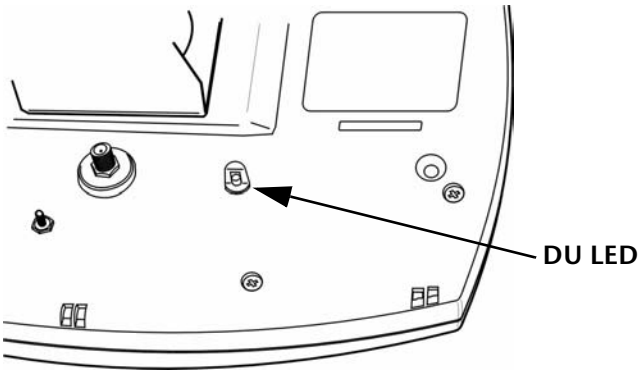

Figure 5.1: DU LED location

- **LED is RED**: the DU is not capturing an adequate enough signal for the system to operate.
- **LED is YELLOW**: the captured signal is within range and the system will function, but the DU is not properly positioned to capture the strongest signal available in its current location.
- **LED is GREEN**: after one complete rotation of the DU this indicates the DU is optimally positioned in this location.

5.2 CU

5.2.1 LED

The CU LED indicates three conditions:

OFF = no DC power supply present

RED = power present + system alarm condition

GREEN = power present + no alarm condition

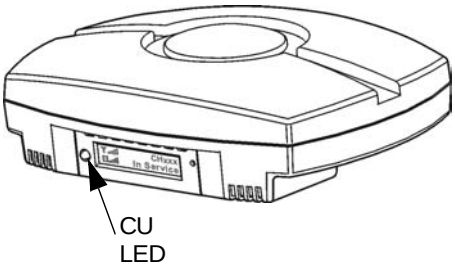

5.2.2 LCD

The CU LCD displays system status and signal strength. The signal strength is indicated by the signal strength bars (Y ..ıll) and the coverage strength is indicated by the coverage bars (⊡ ..ıll).

The following table shows the various messages displayed and if necessary, what action should be taken.

Display with alternating display (if present)	Action (if required)
Spotwave Wireless V:xx Date	Initializing. No action required.
Y ..ıll CHxxx INSTALL MODE	

Table 1: CU Display States

Display with alternating display (if present)	Action (if required)
CHxxx INSTALL MODE Weak Signal Try turning DU	System is not optimally positioned. Turn the DU to another appropriate position.
Poor Signal INSTALL MODE Poor Signal Try turning DU	System will not function. Turn the DU to another appropriate position.
Signal Overdrive INSTALL MODE Signal Overdrive Try turning DU	Turn the DU to another appropriate position.
OUT OF SERVICE System Fault CHECK CABLE CONNECTIONS	Check the RF cable and verify that it is connected properly. Make sure the length of the RF cable is less than 75 meters.
OUT OF SERVICE System Fault CALL PRODUCT SUPPORT	Call product support. Telephone #: 1-877-610-9586
CHxxx IN SERVICE	All OK. No action required.

Table 1: CU Display States

Display with alternating display (if present)	Action (if required)
CHxxx IN SERVICE	Signal weak, but working. No action required.
OUT OF SERVICE Signal Overdrive / OUT OF SERVICE Try turning DU	Turn the DU to another appropriate position.
CHxxx MOVE CU	Move the CU to an alternate location, preferable farther away from the DU.
OUT OF SERVICE Poor Isolation / OUT OF SERVICE Try moving CU	Move the CU to an alternate location, preferable farther away from the DU.
OUT OF SERVICE Loss of Signal / OUT OF SERVICE Searching	Temporary loss of service. No action required
OUT OF SERVICE Loss of Signal / OUT OF SERVICE Try turning DU	Loss of service for more than 24 hours. Turn the DU to another appropriate position.

Table 1: CU Display States

6 – Trouble Shooting Information

1. **Status**: The display and LED on the bottom of the CU dynamically displays information regarding the SpotCell system and environment during installation and operation.

   Action: A red LED on the CU indicates a system alarm condition. Look at the information display to determine if the SpotCell system is indicating a fault.

2. **Status**: The LED on the DU is not illuminating during the installation.

   Action: Ensure the following:

   - The provided cable is connected to the CU and DU.
   - The power supply is connected to the CU.
   - The power supply is plugged into an electrical outlet.
   - The switch on the back of the CU is in the 'Install' position.
   - If the LED is still not illuminating, contact technical support.

3. **Status**: My cell phone does not work around the location I would like to install the SpotCell DU.

   Action: Try positioning the DU externally as high as possible.

4. **Status**: While optimizing the DU for installation, you found that the LED turned green in multiple locations, indicating each had adequate signal strength. How do you determine which location is optimal for the DU?

   Action: Look at the signal level indicated on the display on the bottom of the CU each time the green light appears on the DU during alignment. Mount the DU in the location as indicated having the highest signal level. Figure 6.1:"Displayed signal strength." below shows an example of the signal strength display.

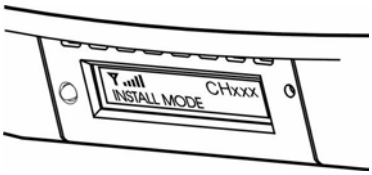

Figure 6.1: Displayed signal strength.

5. **Status**: The DU and CU are installed properly, but your cell phone only works in close proximity to the CU.

   Action: There are three factors that may be affecting coverage as described below:

   - Visually inspect the area around the CU. Ensure that there are not any large metallic objects directly between the CU and the area where cell phone coverage is not adequate. Remount the CU so that it is out in the open.
   - If the signal the DU is receiving is very weak (although still strong enough to allow operation), the area around the CU within which a cell phone can function will be relatively small. An effort can be made to improve system performance by raising or otherwise repositioning the DU in an effort to obtain a stronger signal. In Install mode, signal strength is shown on the CU display.

- check with your vendor that your SpotCell product is compatible with your cell phone service.

6. **Status**: The coverage area around the CU suddenly shrinks after a long period of reliable operation.

   Action: This is most likely due to man made environmental influences such as a large building being erected somewhere in between the DU and the location the DU is receiving a signal from. Repeating the install procedure with the DU in its current position may improve system performance (i.e. Putting the CU switch into 'Install' and spinning the DU around twice, aligning it in the direction indicated by the green LED on the second spin.). If this does not help, the DU may have to be physically repositioned at a different location; going through the install procedure starting at page 7 is necessary at this point.

7. **Information**: Remote installation SpotCell characteristics.

   In order for the SpotCell system to function, there are two basic parameters that must be met. The DU must receive a minimum amount of wireless signal, and a physical environment that blocks wireless signals must be in between the DU and CU (i.e. a wall).

   If the DU is not receiving an adequate signal, the system will not work, or, it will work but provide a very limited area around the CU in which a cell phone will function. In this instance, it may be possible that only one cell phone will be capable of using the system at a time. This is typical of applications that are on the fringe, or outside of a wireless providers advertised coverage area. Improved performance will typically only be attained by moving the DU to a higher location.

8. **Information**: Residential (or building) installations that do not provide for brick, concrete, metal, or other dense material between the DU and CU.

   Action: In this situation it is possible that the signal emitted by the DU will be received by the CU. This will result in the system lowering the power of the signal it is emitting; and therefore the area around the CU in which a cell phone will function will become smaller. To improve performance in this scenario, it is important to:

   - Maximize the height of the DU
   - Separate the DU and CU horizontally as much as possible
   - Mount the DU and CU in a back-to-back manner.
   - It is recommended to use 50 meters of cable in between the DU and CU if possible in an effort to vertically and horizontally separate the system units.

9. **Information**: Proper alignment rotation

   Action: Make sure the DU is rotated once completely within the area available for rotation, and then move through the same rotation again. DU alignment is based on optimizing the direction the DU is facing after initially establishing the range of signal available by rotating the DU in a circle. Once the DU has been rotated in a circle and established the level of signal available, it now sets a threshold based on the surroundings to determine when the LED will illuminate green. If the DU is not pointing in a direction that is within a certain range of the highest signal it encountered since being in 'Install' mode, the LED will not turn green. Additionally, the LED will not illuminate green if a minimum signal level is not achieved during the initial rotation.

Appendix A – SpotCell 100 System Specifications

Note: Spotwave Wireless has the right to change specifications without notice.

A.1 DU LED signal indications:

RED	BS signal too low
YELLOW	BS signal present and within range
GREEN	BS signal is at maximum

A.2 Antenna beam width:

A.2.1 CU Antenna Summary

- Gain +3 dBi
- Elevation Beamwidth 180°
- Azimuth Beamwidth 175°
- Front-to-Back 12 dB
- Horizontally Polarized

A.2.2 DU Antenna Summary

- Gain 10 dBi
- Elevation Beamwidth 62°
- Azimuth Beamwidth 50°
- Front-to-Back 20 dB
- Vertical Polarization

A.3 Architecture

Frequency Band	Uplink: 824-849 MHz Downlink: 869-894 MHz Complete A or B sub-bands factory set (adjacent carrier rejection) * Must be specified at time of order
Formats Supported	AMPS, NAMPS, CDMA, TDMA
Coverage Area	Fully adaptive, supports multiple simultaneous users Up to 20,000 Sq feet (~1850 Sq Meters) or 50,000 Sq feet in open unobstructed areas
System Gain	Automatic, fully adaptive, Maximum 93dB downlink, 89 dB uplink
RF Environment	Up to 147dB path loss to/from the base station
Input Overload Protection	Uplink: Fully adaptive Downlink: Fully adaptive
Maximum Output Levels (radiated)	Uplink: Fully adaptive, up to +30 dBm EIRP (composite) Downlink: Fully adaptive up to +9 dBm EIRP (composite)
Third Order Intercept (radiated)	Uplink: +52 dBm EIRP Downlink: +30 dBm EIRP
Power Supply	7.5 VDC and 10.25 VDC universal power adapter that connects to the indoor unit, outdoor unit power is supplied via the RF cable
Power Consumption	< 22 W

A.3.3 Physical

Operating Temperature	Donor unit: -40° to +55° C Coverage unit: 0° to +40° C
Size	Donor unit: 15"w 12" h 4" d Coverage unit: 9"w 7.25" h 2.5" d
Weight	Donor unit: 4 lb (2 kg) Coverage unit: 2 lb (1 kg)
RF Connectors	Type F, outdoor unit supplied with weather proof boot
RF Cable	RG6 Quad shielded 82' or 25 meters supplied (System supports up to 164 ft. or 50 m)

A.3.4 Installation

Installation Time	Less than one hour typical
Outdoor Unit Alignment	No prior knowledge of base station location required Built in alignment algorithm (LED Indicator on outdoor unit)
Test Equipment	None required No RF knowledge required for installation
User Controls	None, setup and operation is fully automatic

A.3.5 Diagnostics

Fault Indicators	LED on DU (during installation only) LCD indicator on indoor unit
Remote Connectivity	Serial data port on indoor unit
System Interrogation	LCD indicator on indoor unit

Appendix B – SpotCell 111 System Specifications

Note: Spotwave Wireless has the right to change specifications without notice.

B.1 DU LED signal indications:

RED	BS signal too low
YELLOW	BS signal present and within range
GREEN	BS signal is at maximum

B.2 Antenna beam width:

B.2.1 CU Antenna Summary

- Gain +3 dBi
- Azimuth Beamwidth 145°
- Front-to-back 15 dB
- Elevation 160°

B.2.2 DU Antenna Summary

- Gain 12 dBi (13 dB nominal directivity)
- Elevation Beamwidth 36°
- F/B 26 dB
- Azimuth 46°

B.3 Architecture

Frequency Band **Passband Bandwidth**	Full A, D, B, E, F, C band and sub-band (C1, C2, C3, C4, C5) selectivity 5, 7.5, 10, 15, 20 MHz *Start/stop receive band frequency must be specified at time of order.
Formats Supported	GSM/TDMA
Coverage Area	Fully adaptive, supports multiple simultaneous users Up to 20,000 Sq feet (50,000 sq.ft. in open areas)
System Gain Uplink	Automatic, fully adaptive, Maximum 81 dB (including antennas)
System Gain Downlink	Automatic, fully adaptive, maximum 92dB (including antennas)
Downlink Operating Range	-106 to –44 dBm (Rx Isotropic Power)
Input Overload Protection	Uplink: Fully adaptive Downlink: Fully adaptive
Maximum Output Levels (radiated)	Uplink: Fully adaptive, up to +30 dBm EIRP (Composite) Downlink: Fully adaptive up to +7 dBm EIRP (Composite)
Third Order Intercept (radiated)	Uplink: +50 dBm EIRP Downlink: +30 dBm EIRP
Power Supply	7.5 VDC and 10.25 VDC universal power adapter that connects to the Indoor Unit; Donor Unit power is supplied via the RF cable
Power Consumption	< 28 W

B.3.3 Physical

Operating Temperature	Donor unit: -40° to +55° C Coverage unit: 0° to +40° C
Size	Donor unit: 15"w 12" h 4" d Coverage unit: 9"w 7.25" h 2.5" d
Weight	Donor unit: 4 lb (2 kg) Coverage unit: 2 lb (1 kg)
RF Connectors	Type F; weatherproof
RF Cable	RG6 quad-shield 82' or 25 m supplied (System supports 164 ft. or 50 m)

B.3.4 Installation

Installation Time	Less than one hour typical
Outdoor Unit Alignment	No prior knowledge of base station location required Built in alignment algorithm with LED indicator on Donor Unit)
Test Equipment	No test equipment required No RF knowledge required for installation
User Controls	None; setup and operation is fully automatic

B.3.5 Diagnostics

System Status	LCD display on Coverage Unit and LED on Donor Unit

Appendix C – SpotCell 112 System Specifications

Note: Spotwave Wireless has the right to change specifications without notice.

C.1 DU LED signal indications:

RED	BS signal too low
YELLOW	BS signal present and within range
GREEN	BS signal is at maximum

C.2 Antenna beam width:

C.2.1 CU Antenna Summary

- Gain +3 dBi
- Azimuth Beamwidth 145°
- Elevation Beamwidth 160°
- Front-to-Back 15 dB
- Horizontally Polarized

C.2.2 DU Antenna Summary

- Gain 11.5 dBi
- Azimuth Beamwidth 46°
- Elevation Beamwidth 36°
- Front-to-Back 25 dB
- Vertically Polarized

C.3 Architecture

Frequency Band **Passband Bandwidth**	Full A, D, B, E, F, C band and sub-band (C1, C2, C3, C4, C5) selectivity 5, 7.5, 10, 15, 20 MHz *Start/stop receive band frequency must be specified at time of order.
Formats Supported	CDMA
Coverage Area	Fully adaptive, supports multiple simultaneous users Up to 20,000 Sq feet (50,000 sq.ft. in open areas)
System Gain Uplink	Automatic, fully adaptive, Maximum 81 dB (including antennas)
System Gain Downlink	Automatic, fully adaptive, maximum 92dB (including antennas)
Downlink Operating Range	-106 to –44 dBm (Rx Isotropic Power)
Input Overload Protection	Uplink: Fully adaptive Downlink: Fully adaptive
Maximum Output Levels (radiated)	Uplink: Fully adaptive, up to +30 dBm EIRP (Composite) Downlink: Fully adaptive up to +7 dBm EIRP (Composite)
Third Order Intercept (radiated)	Uplink: +50 dBm EIRP Downlink: +30 dBm EIRP
Power Supply	7.5 VDC and 10.25 VDC universal power adapter that connects to the Indoor Unit; Donor Unit power is supplied via the RF cable
Power Consumption	< 28 W

C.3.3 Physical

Operating Temperature	Donor unit: -40° to +55° C Coverage unit: 0° to +40° C
Size	Donor unit: 15"w 12" h 4" d Coverage unit: 9"w 7.25" h 2.5" d
Weight	Donor unit: 4 lb (2 kg) Coverage unit: 2 lb (1 kg)
RF Connectors	Type F; weatherproof
RF Cable	RG6 quad-shield 82' or 25 m supplied (System supports 164 ft. or 50 m)

C.3.4 Installation

Installation Time	Less than one hour typical
Outdoor Unit Alignment	No prior knowledge of base station location required Built in alignment algorithm with LED indicator on Donor Unit)
Test Equipment	No test equipment required No RF knowledge required for installation
User Controls	None; setup and operation is fully automatic

C.3.5 Diagnostics

System Status	LCD display on Coverage Unit and LED on Donor Unit

Appendix A – Safety Hints

Customer safety is a concern we would like to address in a sensible and proactive manner. To this end, the following notes have been provided as a reference to help installers remain safe and think about safety in all aspects of the installation.

The following notes are to be considered as informational only, and not exhaustive or complete.

A.1 Lightning

Never attempt to install the DU outdoors while a lightning storm is in progress in your immediate or neighboring vicinity. The National Lightning Institute says for every five seconds between the flash of lightning and a thunderclap, the lightning is one mile away. If lightning is within 3 miles (15 second count between flash and thunder) of your location, do not attempt an installation.

A.2 Working Aloft

When working aloft, it is best to work in pairs. Avoid attempting procedures alone that are best carried out with a spotter or by two people.

A.2.1 Power Tools

Proper eye protection should be worn when using a drill or any other type of power tool.

A.2.2 Working with Ladders

Properly secure your ladder and work in pairs. Make sure the ladder is properly tied off and use an insulated ladder when working around power lines.

A.2.3 Grounding

Ensuring the DU is properly grounded in external installations will help to prevent property damage and personal injury during lightening storms.

A.3 Overhead Power Lines

While overhead power lines may appear to be insulated, they most likely are not insulated. Always thoroughly investigate your surroundings prior to installing masts or the DU in an outdoor location.

Never attempt installation without adequate lighting, as shadows and trees can obscure power lines.

www.spotwave.com

Spotwave Wireless Inc. 1 Hines Road, Ottawa ON K2K 3C7 Canada

© 2003 Spotwave Wireless Inc. All rights reserved. Printed in Canada
Spotwave and SpotCell are trademarks of Spotwave Wireless Inc. Patents pending.

780-00001-01-03