SPOTWAVE

coverage made simple

# SpotCell® 100 Series User Manual

**SpotCell 100, 111, 112, 141, 142, 163, & 167**

# Technical Support

SpotCell™ serial numbers must be available to authorize technical support and/or to establish a return authorization for defective units. The serial numbers are located on the back of the Coverage Unit (CU) and the Donor Unit (DU), as well as on the box in which they were delivered. Additional support information may be obtained by accessing the Spotwave Wireless Inc. website at www.spotwave.com. To contact support by telephone, call your local Spotwave vendor; or if you are unable to reach your vendor, contact Spotwave Wireless at 1-877-610-9586.

# Important Safety Information

Warning! For your safety, beware of power lines and ensure appropriate safety measures are maintained at all times during the installation of the SpotCell equipment. If equipment not shipped with the SpotCell system is to be used during installation or mounting, follow all equipment manufacturer's instructions in proper use to ensure injury is avoided.

The DU and CU of the SpotCell are low power transmitters. As with a cell phone antenna, avoid unneccessary contact with the front of the units when they units are operating. Mount the units in a location where people will not approach within 1 meter of the front of the DU and 20 centimeters in front of the CU.

When deploying the extended coverage antenna, there must be a minimum separation of 10 cm between the main CU and the extended coverage antenna with the antennas facing in opposite directions. The extended coverage antenna should be mounted in locations where people will not approach within 20 cm in front of the antenna

This manual outlines installation instructions and the appendix offers practical safety tips (see Appendix E entitled 'Safety Hints').

If you are not sure about a safe installation, do not attempt to install it yourself. Call a professional installer for help.

# LIMITED WARRANTY AND LIMITATION OF LIABILITY:

**1**. What is Covered and for How Long? Spotwave Wireless Inc. ("Spotwave") warrants to the original Purchaser that the Spotwave SpotCell System (the "System") is free from defects in material and workmanship under normal use and service for a period of 12 months from the date of shipment from Spotwave (the "Limited Warranty Period").

**2**. What is not covered? This Limited Warranty is conditioned upon proper use of the System by the Purchaser. This Limited Warranty does not cover (and will become null and void in the event of): (a) defects or damage resulting from accident, misuse, abuse, neglect, unusual physical, electrical or electromechanical stress, modification of the System or any part thereof, or cosmetic damage; (b) removal, alteration or defacing of the serial number or other identifying marks on the System; (c) all plastic surfaces and other externally exposed components that are scratched or damaged due to normal use; (d) malfunctions resulting from the use of the System in conjunction with accessories, products or (ancillary) or peripheral equipment not provided by Spotwave; or (e) defects or damage from unauthorized or improper testing, operation, maintenance, installation, servicing or adjustment of the System. Any repairs or replacements provided by Spotwave outside of the Limited Warranty Period (including repairs to or replacement after the end of the Warranty Period), or in excess of the services provided during the Limited Warranty Period, will subject to Spotwave's then prevailing rates.

**3**. What are Spotwave's Obligations and how do you make a claim? During the Limited Warranty Period, Spotwave will repair or replace, at Spotwave's sole option, without charge to Purchaser, any defective component of the System, provided that the System is returned promptly upon discovery of the defect and during the Limited Warranty Period. To obtain service, Systems must be returned to an authorized service facility in the original packaging or packaging adequate for shipping, accompanied by Purchaser's sales receipt or comparable substitute proof of sale showing the date of purchase and the serial number of the System. A valid RMA is required prior to any return.
To locate your nearest authorized service facility, call Spotwave Customer Service at 1-877-610-9586. Spotwave may, at Spotwave's sole option, use rebuilt, reconditioned, or new parts or components when repairing any System or replace a System with a rebuilt, reconditioned or new System. Repaired Systems

will be warranted for a period equal to the remainder of the original Limited Warranty Period for the original System or for 90 days, whichever is longer. All replaced parts, components, boards or equipment shall become the property of Spotwave. If Spotwave determines that any System is not covered by this Limited Warranty, Purchaser must pay the costs for all parts, shipping, and labor charges for the repair or return of such System.

4. What are the Limits on Spotwave's Liability? EXCEPT FOR THE WARRANTY IN PARAGRAPH 1, THE SYSTEMS AND ANY ASSOCIATED SERVICES ARE PROVIDED BY SPOTWAVE ON AS 'AS IS' BASIS AND THERE ARE NO OTHER REPRESENTATIONS, WARRANTIES OR CONDITIONS, EXPRESS OR IMPLIED, WRITTEN OR ORAL, ARISING BY STATUTE, OPERATION OF LAW, COURSE OF DEALING, USAGE OF TRADE OR OTHERWISE, REGARDING THEM OR ANY OTHER PRODUCT OR SERVICE PROVIDED HEREUNDER OR IN CONNECTION HEREWITH BY SPOTWAVE. SPOTWAVE DISCLAIMS ANY IMPLIED WARRANTIES OR CONDITIONS OF DURABILITY, MERCHANT ABILITY, MERCHANTABLE QUALITY, SATISFACTORY QUALITY, NON-INFRINGEMENT OR FITNESS FOR A PARTICULAR PURPOSE. SPOTWAVE DOES NOT REPRESENT OR WARRANT THAT THE SYSTEMS WILL MEET ANY OR ALL OF PURCHASERS' PARTICULAR REQUIREMENTS, THAT THE SYSTEMS WILL OPERATE ERROR-FREE OR UNINTERRUPTED OR THAT ALL ERRORS OR DEFECTS IN THE SYSTEMS CAN BE FOUND TO BE CORRECTED. System performance is dependant upon the performance and availability of services or technology provided by third parties and Spotwave is not responsible for service continuity and reliability, reception, or other performance related limitations associated with use of the Systems. NO AGREEMENTS VARYING OR EXTENDING THE TERMS OF THIS LIMITED WARRANTY WILL BE BINDING ON SPOTWAVE UNLESS IN WRITING AND SIGNED BY AN AUTHORIZED SIGNING OFFICER OF SPOTWAVE THIS LIMITED WARRANTY SHALL NOT EXTEND TO ANYONE OTHER THAN THE ORIGINAL PURCHASER OF THE SYSTEM. SPOTWAVE'S MAXIMUM AGGREGATE LIABILITY TO PURCHASER SHALL NOT EXCEED THE AMOUNTS PAID BY PURCHASER FOR THE SYSTEM GIVING RISE TO THE CLAIM. SPOTWAVE SHALL NOT BE LIABLE FOR ANY SPECIAL, INCIDENTAL, CONSEQUENTIAL, INDIRECT OR SIMILAR DAMAGES, LOSS OF USE, DATA OR PROFITS, DAMAGES TO PURCHASER'S PROPERTY, OR INJURY TO PURCHASER OR OTHERS ARISING OUT OF THE USE, MISUSE OR INABILITY TO USE ANY SYSTEM, WHETHER OR NOT SUCH DAMAGE ARISES OUT OF CONTRACT OR TORT (INCLUDING WITHOUT LIMITATION, NEGLIGENCE) OR CLAIMS BY A THIRD PARTY, EVEN IF SPOTWAVE HAS BEEN ADVISED OF SUCH DAMAGES OR THEY ARE FORESEEABLE

5. This Limited Warranty allocates risk between Purchaser and Spotwave, and the Spotwave System pricing reflects this allocation of risk and the limitations of liability contained in this Limited Warranty. The agents, employees, distributors, dealers or representative of Spotwave are not authorized to make modifications to this Limited Warranty, or make additional warranties binding on Spotwave. Accordingly, additional statements such as advertising or presentations, whether oral or written, do not constitute warranties by Spotwave and should not be relied upon.

**OWNERSHIP AND RISK OF LOSS:**

6. Who Owns the rights in the System? The System is protected by Canadian, US and international copyright law and other intellectual property protection laws and treaties. Purchaser acknowledges that Spotwave and its licensors are the owner of all intellectual property, including, without limitation, patents and copyright,

relating to the System and the trademarks used in association with the System. Purchaser agrees that it will not (and will not attempt to) modify, prepare derivative works of, reverse engineer, decompile, disassemble, or other attempt to derive the source code of any software contained within the System.

7. Who bears the Risk of Loss? Risk of loss for the System passes to Purchaser upon the delivery to Purchaser or to a carrier for shipment, which ever is earlier. Title to the Systems (excluding any software) will pass upon payment in full for the Systems. Title to any software shall always remain with Spotwave or its licensors. As security for payment, Purchaser grants to Spotwave a purchase money security interest in the Systems (together with any proceeds, including insurance proceeds) and agrees that a copy of this letter of agreement or any other appropriate document may be registered as required to perfect the security interest granted. Systems may be resold by Purchaser in normal course of business, but until paid for in full, Purchaser will not pledge or otherwise encumber the Systems. Purchaser agrees to immediately report to Spotwave, any seizure or attachment of the Systems by creditors; (ii) any petition in bankruptcy, insolvency, receivership or similar proceedings filed by, or against Purchaser; or (iii) any arrangement, composition or similar agreement for the benefit of creditors. Systems held for Purchaser by Spotwave are at Purchaser's sole risk and expense.

**OTHER TERMS:**

8. What terms govern our relationship? These terms and any software license or warranty documentation accompanying the Systems constitute the complete and exclusive statement of the terms and conditions between us regarding the Systems and cannot be altered, amended or modified except in writing executed by Spotwave. This letter of agreement and any disputes arising hereunder shall be governed by and interpreted in accordance with the laws of the Province of Ontario, Canada. The United Nations Convention on Contracts for the International Sale of Goods and any legislation implementing such Convention, if otherwise applicable is expressly excluded. Any terms and conditions of any purchase order or other instrument issued by Purchaser which are in addition to or inconsistent with the terms and conditions of this letter of agreement shall not be binding and shall not apply, even if accepted by Spotwave.

**MANUAL DISCLAIMER**

Product specifications, pricing, packaging, technical support and information ("Specifications") and all claims, features, representations, and/or comparisons provided are correct to the best of our knowledge of the date of publication, but may contain errors or omissions and are subject to change without notice.

INFORMATION IS PROVIDED BY SPOTWAVE WIRELESS INC. ON AN "AS IS" BASIS, WITHOUT ANY OTHER WARRANTIES OR CONDITIONS, EXPRESS OR IMPLIED, INCLUDING, BUT NOT LIMITED TO, WARRANTIES OF MERCHANTABLE QUALITY, SATISFACTORY QUALITY, MERCHANTABILITY OR FITNESS FOR A PARTICULAR PURPOSE, OR THOSE ARISING BY LAW, STATUTE, USAGE OF TRADE, COURSE OF DEALING OR OTHERWISE. THE ENTIRE RISK AS TO THE RESULTS OF THE INFORMATION PROVIDED IS ASSUMED BY YOU. WE SHALL HAVE NO LIABILITY TO YOU OR ANY OTHER PERSON OR ENTITY FOR ANY INDIRECT, INCIDENTAL, SPECIAL, OR CONSEQUENTIAL DAMAGES WHATSOEVER, INCLUDING, BUT NOT LIMITED TO, LOSS OF REVENUE OR PROFIT, LOST OR DAMAGED DATA OR OTHER COMMERCIAL OR ECONOMIC LOSS, EVEN IF WE HAVE BEEN ADVISED OF THE POSSIBILITY OF SUCH DAMAGES, OR THEY ARE FORESEEABLE. WE ARE ALSO NOT RESPONSIBLE FOR CLAIMS BY A THIRD PARTY. OUR MAXIMUM AGGREGATE LIABILITY TO YOU AND THAT OF OUR DEALERS AND SUPPLIERS SHALL NOT EXCEED FOURTY DOLLARS. SOME STATES/COUNTRIES DO NOT ALLOW THE EXCLUSION OR LIMITATION OF LIABILITY FOR CONSEQUENTIAL OR INCIDENTAL DAMAGES, SO THE ABOVE LIMITATIONS MAY NOT APPLY TO YOU. All product, font and company names are trademarks or registered trademarks of their respective owners.

# Table of Contents


Introduction . . . . . 1

Getting Started . . . . . 3
- Packing List . . . . . 3

Installation . . . . . 5
- Preparation . . . . . 5
- Positioning the DU . . . . . 6
- Choosing a location for the SpotCell CU . . . . . 11
- Positioning the CU . . . . . 12
- Auxiliary Antenna . . . . . 12

Mounting the DU and CU . . . . . 13
- Running Cable Through Walls . . . . . 13
- Mounting the DU . . . . . 13
- DU Outdoor Mounting . . . . . 15
- DU indoor mounting . . . . . 18
- Mounting the CU . . . . . 18

Display Information . . . . . 21
- DU LED Color . . . . . 21
- CU LED Color . . . . . 21

Trouble-Shooting . . . . . 25

SpotCell 100 System Specifications . . . . . 29

SpotCell 111/112 System Specifications . . . . . 33

SpotCell 163 System Specifications . . . . . 37

SpotCell 167 System Specifications . . . . . 41

SpotCell 141/142 System Specifications . . . . . 45

Safety Hints . . . . . 49

# 1 – Introduction

## 1.1 This Manual

The contents of this manual complements the Quick Install Guide. It provides specific details that may be referred to if necessary during installation of a SpotCell™ 100 Series adaptive coverage system.

## 1.2 No Special Knowledge

Installation of a SpotCell solution does not require any specialized technical knowledge.

The SpotCell coverage system can be installed by any person(s) with the ability to use a screwdriver, and in some situations may require the use of a ladder, drill, and additional related tools.

## 1.3 Product Overview

The purpose of the SpotCell system is to enable personal wireless communications in specific locations within a wireless service area where cell phones do not work, or work poorly, for example inside a building, or at the cell boundary.

The SpotCell system receives signals from one or more wireless base stations and re-transmits the signal to areas where cell phones do not work or work poorly due to obstructions or the remoteness of the location.

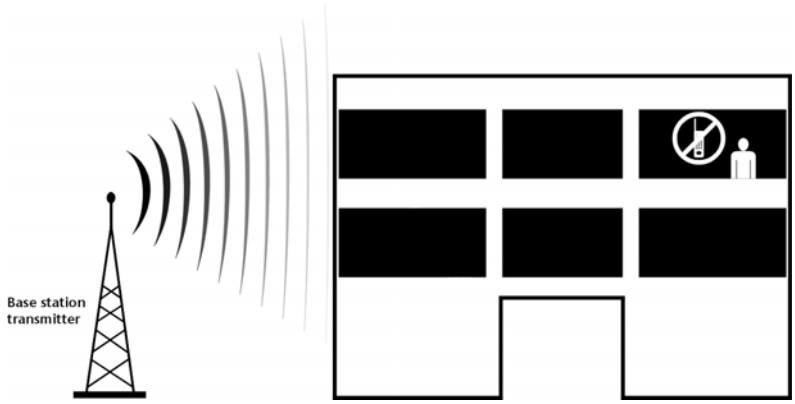


**Figure 1.1: Base station signal does not reach wireless subscriber**

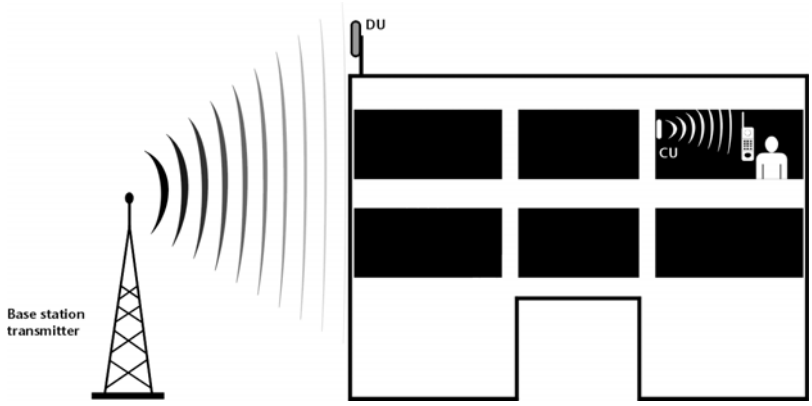


**Figure 1.2: SpotCell improves wireless communications**

The SpotCell™ 100 Series adaptive coverage system provides band-selective, on-frequency, in-building coverage in the cellular, PCS or SMR bands. It uses proprietary, patent-pending, adaptive techniques that allow a SpotCell solution to be installed and operated without engineering intervention or support.

The SpotCell solution is generally format specific - AMPS, CDMA/1xRTT/1xEVDO, TDMA/GSM/GPRS/EDGE, and iDEN formats. When ordering a SpotCell solution be sure to specify the format, frequency band and sub-band. For PCS band equipment it is helpful if the start and stop frequencies for the operational sub-band are provided.

# 2 – Getting Started

## 2.1 Packing List

The SpotCell solution is shipped in a single box containing:

- Donor Unit (DU) - this is the outward facing part of the system.
- Coverage Unit (CU) - this is the indoor part of the system.
- Power Adapter - to be plugged into an electrical outlet, and connected to the CU.
- Cable - used to connect the CU and DU together.
- Mounting Kit

SpotCell 141/142 : The SpotCell 141 and SpotCell 142 Dual Band systems include a second DU and extra cables to connect the two DUs.

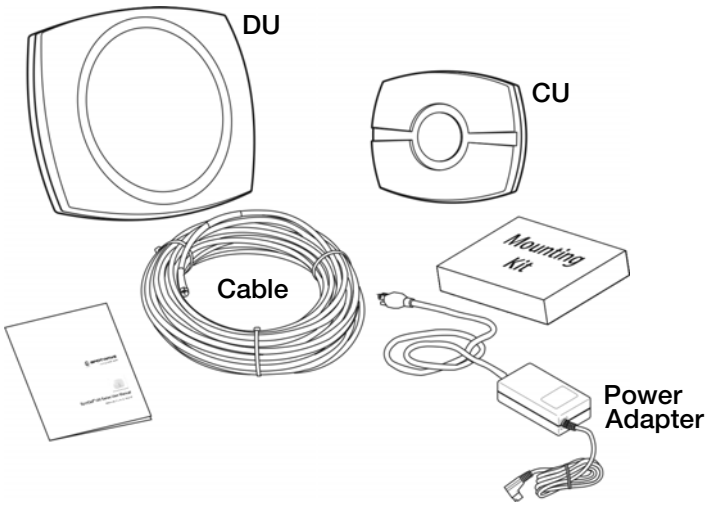


**Figure 2.1: Components of the SpotCell package**

Note: Parts are provided for the majority of installation options, but do not cover all possibilities. You may need to purchase additional hardware specific to your mounting environment before you begin the installation. A tripod and mast would be typical additional equipment purchased for mounting the SpotCell DU on a rooftop.

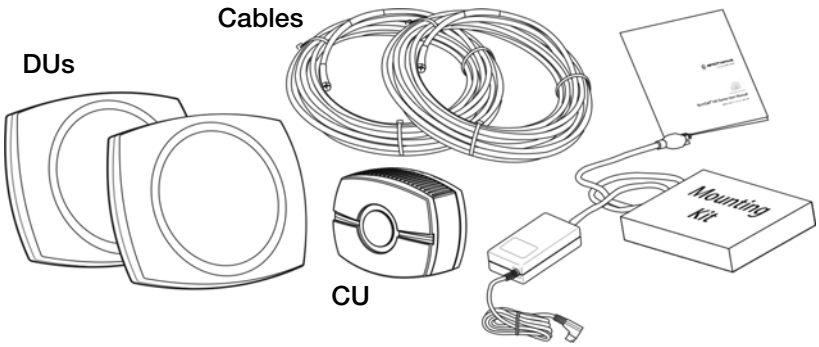


**Figure 2.2: Components of SpotCell 141/142 Dual Band package**

## 2.2 Unpacking

Physically inspect the box for shipping damage before unpacking the SpotCell System.

1. Remove the SpotCell components from the box.
2. Remove all packing material from the Donor Unit (DU) and the Coverage Unit (CU). Save the packaging in case the SpotCell System is ever stored or shipped to SpotWave for service.
3. Check the contents of the package to make sure you have received everything ordered and verify that the mounting kit contains all the listed parts.
4. Check the DU and CU for shipping damage. Pay particular attention to the unit's outer shell casing.

# 3 – Installation

## 3.1 Preparation

The following are general considerations and preparations that should be looked at before installing the SpotCell system.

### 3.1.1 Signal Strength

The SpotCell system brings signals from an area of adequate coverage to an area with poor or non-existent coverage. It is the DU which captures a good signal, and the CU that provides the signal to the area with poor cell phone coverage. The DU can be mounted inside or outside, as long as it is in an area where your cell phone works. Generally, the better your cell phone works at the location the DU is mounted, the better the system will perform.

### 3.1.2 DU Height

In fringe areas, locating the DU as high as possible will provide optimal performance.

### 3.1.3 Avoid obstructions

General placement of the DU and CU must be in unobstructed areas. For example, the CU should not be placed on a wall behind any type of furniture (behind items such as metal filing cabinets would be a particularly poor location). Similarly for the DU, the front of the unit should not be directly facing any type of metal structures, which are often found on building rooftops.

### 3.1.4 Proximity to power source

The indoor unit (CU) must be located within 20 feet (6 meters) of a power source.

### 3.1.5 Distance between DU and CU

Although you should separate the DU and CU as much as possible, there are only 82 feet (25 meters) of cable (see following note) provided to connect the two units. Make sure the general location of the two units is within this limit. The standard cable is quad-shield RG-6. Use only Spotwave Wireless supplied cable.

Note:
1. For greater DU to CU separations RG-11 quad shield cable can be ordered. This extends the DU to CU distance to 164 feet (50 meters).
2. Plenum rated RG-6 and RG-11 cable may be ordered. Plenum cable is needed for installations in return air ceilings, floor to floor riser use and elevator shafts.

### 3.1.6 Orientation of DU relative to CU

If possible face the DU and CU in opposite directions, and back to back while maintaining maximum separation. While not a requirement, some installations will perform better if the units are positioned in this manner. This is generally more important for an inside mounted DU than one mounted outside on a roof or an external wall.

### 3.1.7 Barrier between DU and CU

The greater the physical obstruction between the DU and CU, the better the performance. Dense obstructions such as brick, concrete or metal walls are better than wooden or plaster walls.

## 3.2 Positioning the DU

The DU is the outward facing unit. It is the unit that picks up the signal from and communicates with the service providers basestation network.

It may not be possible to install the DU indoors when installing the SpotCell solution in remote areas. An effort should be made to install the DU outdoors and the DU should be installed as high as possible when the installation is in a remote area.

Use your mobile phone handset to identify the inside location where the strongest signal is received, or the outside roof or external wall location where the strongest signal is.

### 3.2.1 Installing the DU

The following outlines the procedure for locating a DU inside a building, on a rooftop, and on the outside surface of an external wall.

1. Position the DU (but do not mount it) as close to the final desired mounting location as possible. It is helpful to have the CU near the DU. The CU does not have to be in its final location at this time.

| Indoors | Outside on a Roof | Outside on an External Wall |
|---|---|---|
| While not a requirement, it is highly recommended the DU be installed facing a window[a] when installed indoors. | The CU does not have to be in its final position at this time, but it should not be brought outdoors if it is raining, below freezing or above 105 F° (40 C°). | |

a. Tinted windows may contain metallic particles which can degrade the radio signal more than the adjacent exterior wall.

2. **For dual band systems (SC141/142):**

   a) Connect a 6 foot (2 meter) RG6 cable to the CU.

   b) Connect the other end of the RG6 cable to the RG11 cable using the provided adapter.

   c) Connect the RG11 cable to the upper connector on the PCS DU

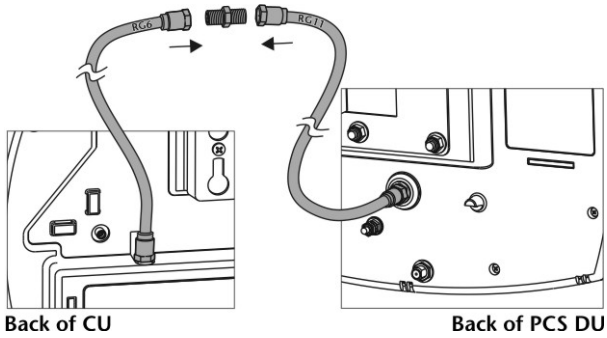


**Figure 3.1: Connecting SC141/142 CU to PCS DU**

d) Use the remaining RG6 cable to connect the PCS DU to the Cell DU.

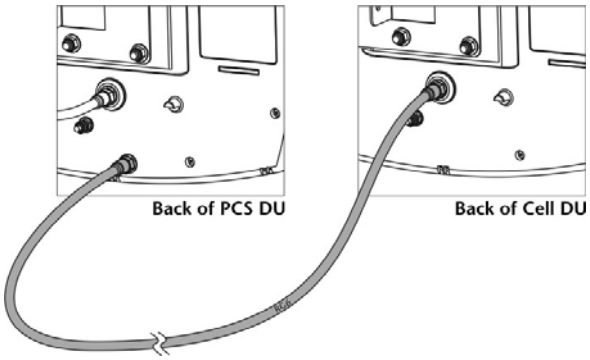


**Figure 3.2: Connecting SC141/142 PCS DU to Cell DU**

**For all other (non dual band) systems:**
a) Connect the DU and CU with the enclosed cable.

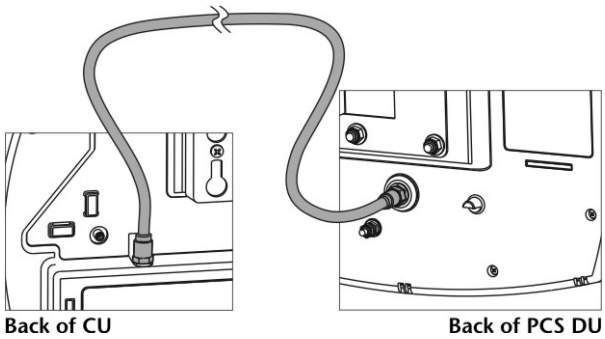


**Figure 3.3: Connecting CU to DU**

3. Tighten all cable connections to the DUs and CU with a wrench (a 1/4 of a turn tighter than finger tight) to ensure moisture does not penetrate.

4. Connect the power supply as shown below.

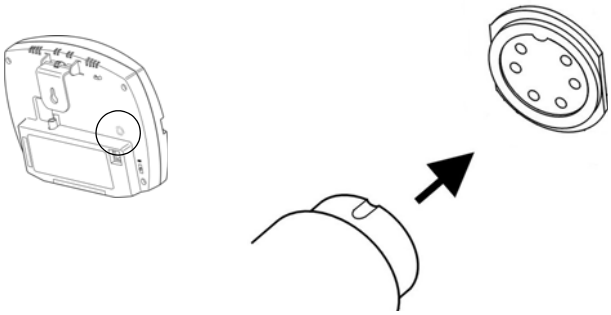

**Figure 3.4: Connecting power supply to CU**

Note: Only use the power supply provided with the SpotCell system. Connecting a power supply from another SpotCell system may damage the unit and cause it to fail.

5. Ensure the mode switch on the CU is in the 'Install' (1) position.
   For dual band systems (SC141/SC142) set the band select switch to 800 MHZ.

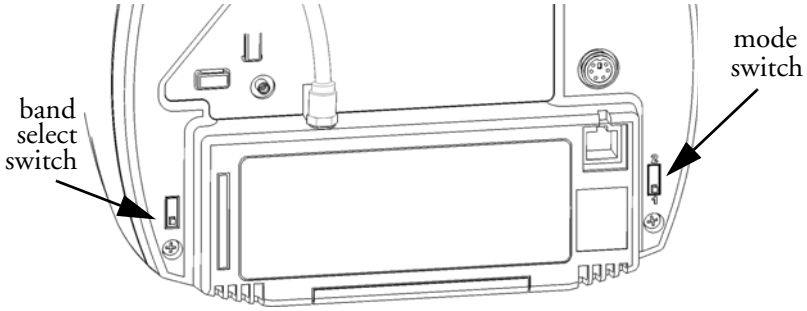


**Figure 3.5: CU witch locations**

6. Plug the power supply adapter into a wall socket.

7. Alignment Step 1. Hold the DU upright and pointing away from you. If installing a dual band system (SC141/142), ensure you are holding the 800 MHZ DU.
   Ignore the color of the LED on the back of the DU, while:

| Indoor DU | Outdoor DU On a Roof | Outdoor DU on an External Wall |
|---|---|---|
| Rotating the DU left to right with the DU facing to the outside through the window.<br> 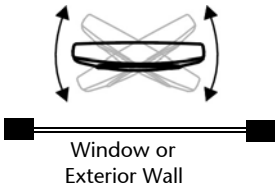 <br><br>If not in front of a window, rotate the DU in a complete 360° circle (see roof location diagram). | Rotating the DU in a complete 360° circle.<br> 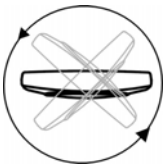 | Rotating the DU left to right with the DU facing away from the exterior wall.<br> 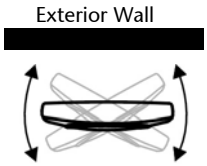 <br> |
| 163 iDEN & 167 Product Only. For the 163 & 167 products, the LED on the DU flashes. When rotating the DU from time to time the flashing will stop and the LED turns OFF, when this occurs momentarily pause the rotation then resume when flashing restarts. | | |

8. Alignment Step 2. Repeat the above rotation a second time. This time monitor the color of the LED. The LED color is an indication of the signal strength the DU is receiving from the wireless basestation tower.

   Stop the rotation each time the LED is green and note the direction the DU is facing when it is GREEN (the LED may turn green once or multiple times). The GREEN direction is the direction the DU must face when installed for best system performance.

   When multiple GREEN locations are present mount the DU facing the direction where the LED was green for the longest period of time during this second rotation.

9. For dual band systems (SC141/142) set the band select switch to 1900 MHZ and, with the 1900 MHZ DU, repeat steps 7 and 8 to align the second DU.

10. It is recommended that various outside roof and exterior wall locations, and locations within the building be tested to identify the best DU location. The LCD display on the DU will help you identify the location where the signal strength is strongest. The LCD display on the CU indicates the signal strength that the DU is receiving. figure 3.6 shows 5 bars of signal strength. Five bars is maximum.

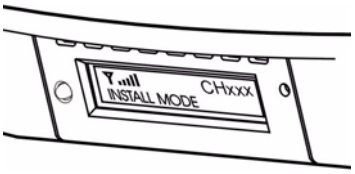


**Figure 3.6: Displayed signal strength**

Mount the DU in the location that has the highest indicated signal level. Then aim the DU in the direction that provides the highest indicated signal level on the CU LCD display.

Note: On the upper floors of tall buildings, it may be necessary to tilt the DU down to get the strongest signal.

11. Proceed to Chapter  for mounting instructions once the DU location has been optimized.

## 3.3 Choosing a location for the SpotCell CU

The CU location is optimized, after the DU location and orientation has been optimized and the DU has been mounted.

Generally, the CU should be mounted in a location as far as possible from the DU, while being within the area where you require improved coverage.

If mounted on a ceiling, the unit should be facing downward, and in the center of the area requiring coverage. When mounted facing down (horizontal) the coverage pattern is circular for an open are with minimum obstructing walls. When mounting the CU horizontally place it in the centre of the area needing improved coverage.

SC141/142 Note: The dual band CU should only be mounted vertically.

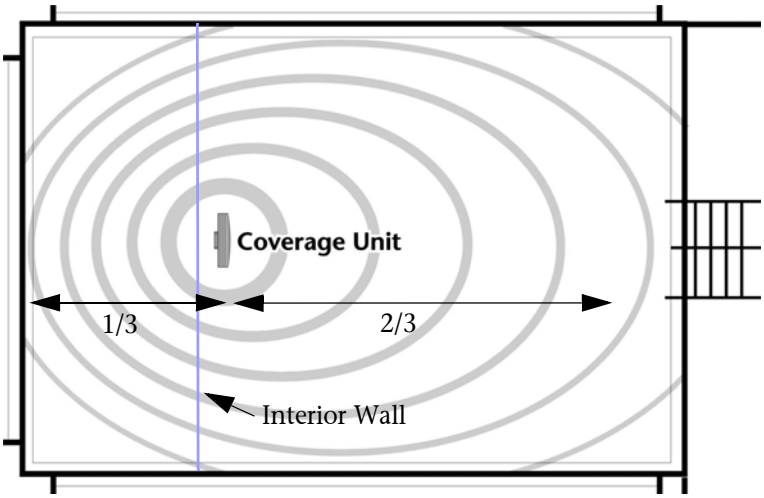


**Figure 3.7: CU position and signal coverage**

If mounted vertically on a wall, facing away from the wall the coverage pattern for an open area with minimum obstructing walls is as shown in figure 3.7.

When mounting the CU vertically the unit should be positioned in the middle of the area to be covered side-to-side, and off-centered front-to-back, as shown in figure 3.7. The coverage area to the front is about twice that to the back of the CU if the wall it is mounted on is a typical interior drywall partition wall, and not one constructed of a dense material such as concrete. The unit should be mounted as high on the wall as possible.

Alternatively the CU can be mounted vertically by suspending it from the t-bars of a suspended ceiling. T-bar clips are commercially available that permit this.

## 3.4 Positioning the CU

1. Ensure that the DU position has been optimized and has been mounted in place.
2. Move the mode switch on the CU from 'Install' to 'Active'.
3. Hold the CU in the position it is to be mounted. Ideally the display on the CU will show 5 bars for coverage area.

   If it is not showing 5 bars for coverage area and there are alternate mounting locations, move the CU to the alternate locations and check the display. Place the CU in the location showing maximum number of bars.

Note: Each time the CU is moved, wait approximately 25 seconds for the coverage area bars ( ) to stabilize.

4. If the number of bars is not changing, which is very possible, choose a CU mounting location that is convenient for the area requiring coverage.
5. Refer to Chapter  for mounting instructions.

## 3.5 Auxiliary Antenna

The SpotCell Coverage Extension kit (purchased separately) can extend coverage into hard to reach places that are blocked by obstructions such as dense walls or shadowed by elevator shafts or ductwork.

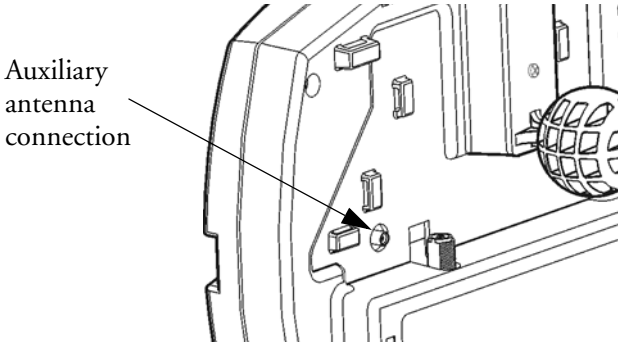


Instructions for connecting and mounting the auxiliary antenna are included in the Coverage Extension (CE) kit. A CE will provide coverage for an area about 25% of that provided by the CU.

# 4 – Mounting the DU and CU

## 4.1 Running Cable Through Walls

If it is necessary to run a cable through a wall, use a masonry or wood drill bit to drill a 3/4-inch diameter hole.

After passing the cable through, use the putty in the installation kit to fill the hole around the cable.

## 4.2 Mounting the DU

The DU (or two DUs for dual band SC141/142 systems) may be indoor or outdoor mounted. Based on the direction the DU will point, consider possible mounting locations.

All necessary hardware required for mounting on internal or external walls, or on pipes is included in the mounting kit.

The illustrations on the following pages show some of the possible mounting options.

### 4.2.1 Wall Mount

**Figure 4.1: Wall Mount**

The mounting shown in Figure 4.1: allows for no significant left or right rotation, but provides a wide range of down-tilt when the lower circular slot on the angle backplate is used, a wide range of up-tilt when the upper circular slot is used, but no up-tilt or down-tilt when the center hole on the backplate is used (the center hole is hidden from view in Figure 4.1:).

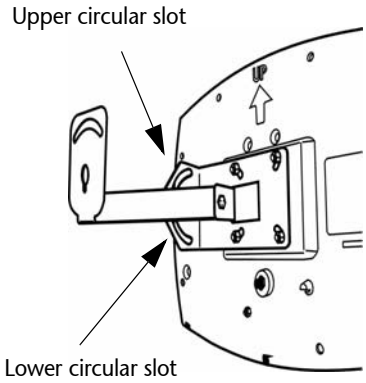

### 4.2.2 Overhead Mount

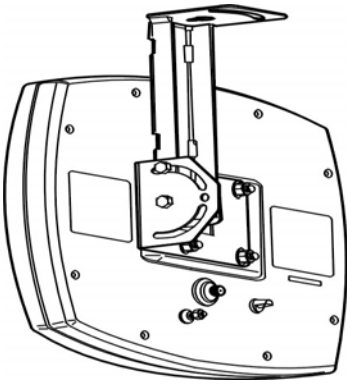

**Figure 4.2: Overhead Mount**

The mounting shown in Figure 4.2: provides left to right rotation, and a wide range of down-tilt using the upper circular slot or a small amount of up-tilt and down-tilt when the bottom circular slot is used.

### 4.2.3 Horizontal Surface Mount

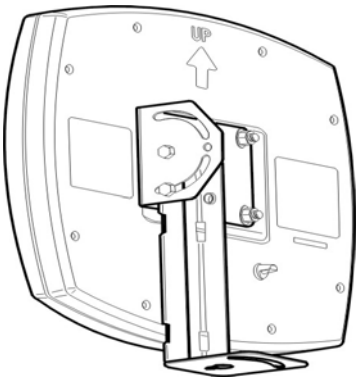


**Figure 4.3: Horizontal Surface Mount**

The mounting shown in Figure 4.3: allows for left to right rotation and a wide range of upward tilt using the lower circular slot, or a small amount of down tilt and down tilt when the upper circular slot is used.

### 4.2.4 Pipe Mount

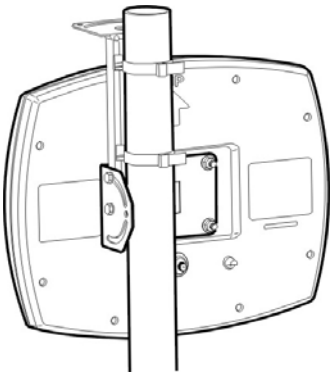

**Figure 4.4: Pipe Mount**

Use hose clamps to mount the unit to a 2-in to 5-in pipe.

The mounting shown in Figure 4.4: allows for complete left to right rotation with a limited range of up-tilt or down-tilt.

If the hose clamp bracket is reversed to extend down then the up-tilt range will increase if the DU is mounted at the top of the pipe, but the down-tilt range is unchanged.

## 4.3 DU Outdoor Mounting

The mounting bracket has 4 mounting holes for 1/4-in lag bolts. Three are in a triangular pattern, the fourth is a circular slot. Only the circular slot and one other hole is shown in the previously given figures.

### 4.3.1 Mounting to a wood structure

1. Use the holes in mounting bracket as a template and mark the hole locations. Mark two regular holes if no motion is required or one hole and the circular slot if motion is required for optimizing the orientation of the DU.
2. Drill two 1/8-in. diameter holes approximately 2.5-in. deep.
3. Install the DU using the two 1/4-in. lag bolts.
4. If additional security is required a third hole and lag bolt could be used after correct orientation is determined.

### 4.3.2 Mounting to a brick or concrete structure:

1. Use holes in mounting bracket as a template and mark the hole locations. Mark the two regular holes if no motion is required or the hole and slot if motion is required.
2. Use a masonry drill bit to drill two 5/16-in. diameter holes, 2-in. deep.
3. Insert masonry screw anchors so that the anchor is flush to the mounting surface.
4. Install the DU using the two 1/4" lag bolts.
5. If additional security is required a third hole and lag bolt could be used after correct orientation is determined.

### 4.3.3 Mounting to a pipe:

Use the supplied two stainless steel hose clamps.

1. Feed the end of the hose clamp through the rectangular slots as shown in Figure 4.4: "Pipe Mount".
2. Aim the DU at the signal source and tighten clamps.

Note: DO NOT use cable ties to mount the DU.

### 4.3.4 Attaching the cable

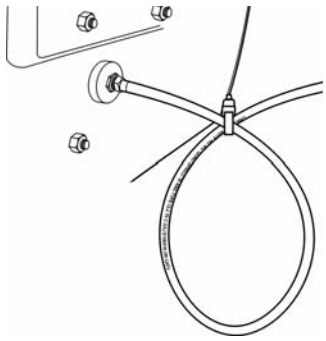

**Figure 4.5: Drip Loop**

While securing the cable, ensure that a drip loop is fashioned near the DU (to prevent water from collecting around the cable where it attaches to the DU).

Fashion the drip loop and fasten a black tie wrap around the loop to keep the loop secured as shown in Figure 4.5: "Drip Loop".

shows drip loops secured for both cables near the dual band (SC141/142) PCS DU.

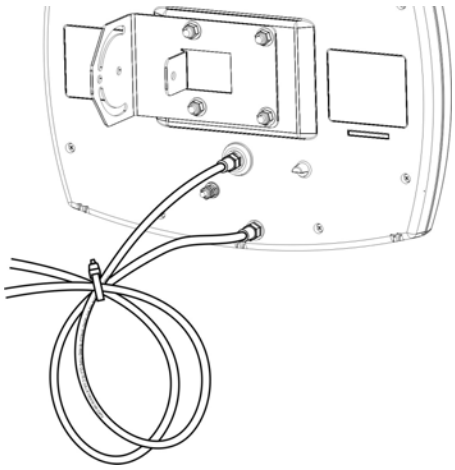

**Figure 4.6: Drip Loops for dual band PCS DU**

When routing the cable on a roof be sure to locate it where it will not be tripped over.

Use tie-wraps to attach the cable to an existing pipe or cable run.

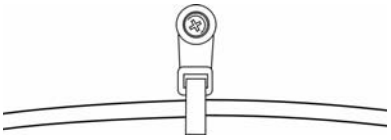

**Figure 4.7: Cable Strap**

Secure the cable to wood or siding walls using #6 x 1.5-in. wood screws and cable loop straps as shown in Figure 4.7:.

To attach the cable to a brick or concrete wall:

1. Drill a 3/16-in. diameter x 1-1/4 in. deep hole using a masonry drill bit.
2. Insert the anchor flush with the mounting surface.
3. Use cable clamps and screws to attach the cable to the wall.

#### 4.3.5 Bringing the cable indoors

To bring the cable indoors, it may be necessary to drill a hole through the wall.

To bring the cable through an exterior wall:

1. Depending on the material the wall is made of use a wood or masonry drill bit to drill a 3/4-in. diameter hole.
2. Pass the connector and cable through the wall.
3. Use the putty/sealant provided to fill the hole.

### 4.3.6 DU Grounding (outside DU only)

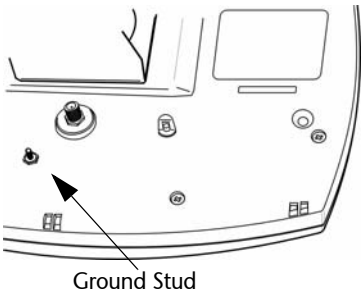


When the DU is installed outside electrical (or building) code calls for the DU to be grounded. A ground-stud is provided on the back of the DU for this - see Figure 4.8:.

Ensure there is a connection to earth ground.

**Figure 4.8: DU Ground Stud**

When grounding the DU, use #10-AWG solid-copper wire (minimum). Green insulation is preferred. Alternatively uninsulated #8-AWG aluminum may be permitted. Be sure to check national and local code requirements.

Connect the ground wire to the DU ground terminal using a crimp-on ring or lug connector. Ground conductor and termination hardware are not supplied.

Warning! Failure to properly ground the DU will leave the unit and building vulnerable to damage from lightning strikes. Check local building and electrical code requirements and comply with both local and national regulations.

Ideally the DU ground wire should be bonded to the roof ground network. For roofs without such a network use a metal cold water pipe, structural steel, or metal conduit.

### 4.3.7 Cable Grounding (outside DU only)

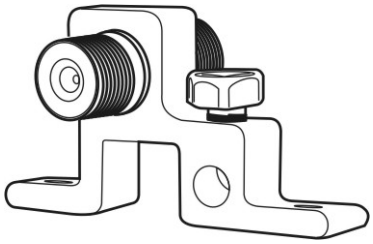

When the DU is installed outside electrical (or building) code calls for the outer conductor of the coaxial cable to be grounded at or near the point of entrance of the cable into the building. A ground-block (not supplied) is required for this - see Figure 4.9:.

**Figure 4.9: Ground Block**

Ideally the ground block should be bonded to the roof ground network, a metal cold water pipe, structural steel, or metal electrical conduit. Use #10-AWG solid-copper wire (minimum).

Connect the ground wire to the cold water pipe or alternative using an appropriate crimp-on ring or lug connector. Ground conductor and termination hardware are not supplied.

## 4.4 DU indoor mounting

To mount the DU indoors:

1. Use the mounting bracket as a template and mark the hole locations. Mark the two regular holes if no motion is required or mark the hole and the slot if motion is required.
2. If the mounting is in a solid wood surface, or a stud covered by drywall, drill a 5/32 inch diameter hole. Mount the unit with 2 inch wood screws.

   *or*

   If the mounting is in drywall, drill a ¼ diameter hole and insert an anchor. Mount the unit with 1/2 inch pan head screws.
3. Attach cables to the wall using tie wraps and mount directly to the wall where possible (using 1/2 inch pan head screws). If an anchor is required drill a 3/16 inch diameter hole, insert the anchor, and fasten with 1/2 inch pan head screws.

## 4.5 Mounting the CU

The SpotCell 100 series of products have two different types of mounting systems.

The dual band product (SC141/142) uses a mounting clip that is attached to the wall. The clip must be mounted at least 4 inches from the ceiling to allow the CU to slip into the bracket.

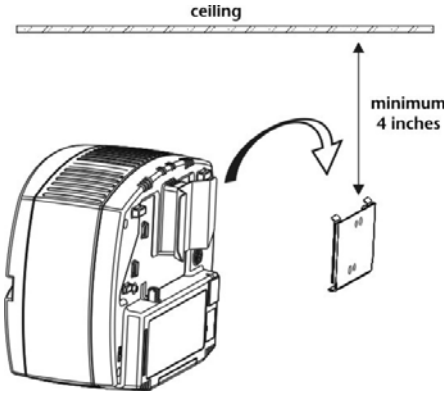


**Figure 4.10: SC141/142 CU mounting bracket**

All other SpotCell 1xx systems can either be surface mounted flat or can be attached using the optional ball bracket. The ball bracket can be rotated to allow mounting to a ceiling or wall such that the face of the unit is parallel to the floor or ceiling, or positioned at any appropriate angle.

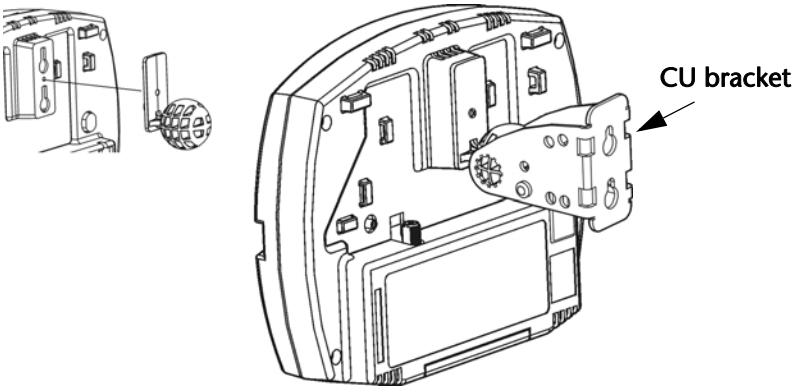


**Figure 4.11: CU mounting bracket.**

### Mounting the dual band (SC14x) CU

1. Find a suitable location to mount the unit that will provide good signal coverage. Refer to section 3.3 "Choosing a location for the SpotCell CU".
2. Fasten the mounting bracket insert to the back of the CU.

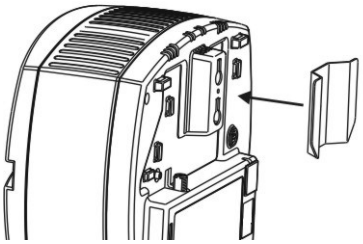

**Figure 4.12: Fasten mounting bracket insert to SC141/142 CU**

3. If mounting on a solid wood surface, or stud covered by drywall, drill a 1/8th inch diameter hole at least 4.5 inches from the ceiling (to allow the CU to slip into the bracket) and then fasten the mounting clip with #6 x 1.5” screws.

   *or*

   If mounting in drywall, drill a ¼ inch diameter hole at least 4.5 inches from the ceiling (to allow the CU to slip into the bracket), insert the screw anchors, and then fasten the mounting clip with 1/2” screws.
4. Mount the CU by sliding the insert into the bracket.
5. Attach cables to the wall using tie wraps and mount directly to the wall where possible (using 1/2 inch pan head screws). If an anchor is required drill a 3/16 inch diameter hole, insert the anchor, and fasten with 1/2 inch screws.

### Mounting other (non dual band) CUs

1. Find a suitable location to mount the unit that will provide good signal coverage. Refer to section 3.3 "Choosing a location for the SpotCell CU".
2. If mounting on a solid wood surface, or stud covered by drywall, drill a 1/8th inch diameter hole and mount with #6 x 1.5” screws.

   *or*

   If mounting in drywall, drill a ¼ inch diameter hole, insert the screw anchor, and then mount with a 1/2” pan head screw.
3. Attach cables to the wall using tie wraps and mount directly to the wall where possible (using 1/2 inch pan head screws). If an anchor is required drill a 3/16 inch diameter hole, insert the anchor, and fasten with 1/2 inch screws.

# 5 – Display Information

## 5.1 DU LED Color - 2nd Rotation

**Figure 5.1: LED on back of DU**

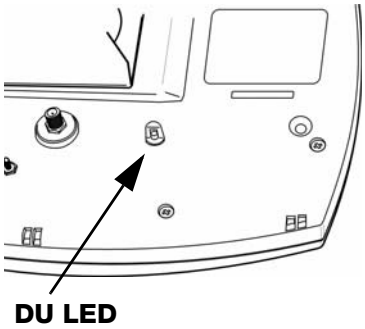


**LED is RED:** The DU is either not capturing an adequate signal for the system to operate, or capturing one that is too strong for the system (rarely the case).

**LED is YELLOW**: The captured signal is within range and the system will function, but it is not the strongest signal available at the present location.

**LED is GREEN:** The DU is capturing a signal that is either the strongest one available at the present location, or nearly so.

## 5.2 CU LED Color

**Figure 5.2: CU LED**

**OFF** = NO Power

**RED** = Power + Install Mode

<u>or</u>

**RED** = Power + Active Mode + Alarm

**GREEN** = Power + Active Mode + NO Alarm

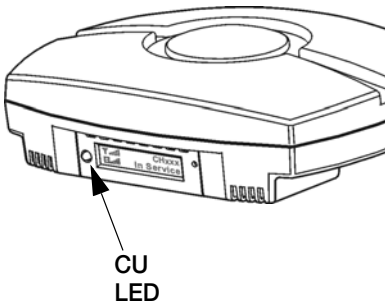

### 5.2.1 LCD

The CU LCD displays system status and signal strength. The signal strength is indicated by the signal strength bars (Y ..ıll) and the coverage strength is indicated by the coverage bars (⊡ ..ıll).

The following table shows the various messages displayed and if necessary, what action should be taken.

| Display with alternating display (if present) | Action (if required) |
|---|---|
| Spotwave Wireless<br>V:xx Date | Initializing.<br>No action required. |
| Y ..ıll CHxxx<br>INSTALL MODE | |
| Y ..ıll CHxxx<br>INSTALL MODE<br>Weak Signal<br>Try turning DU | System is not optimally positioned. Turn the DU to another appropriate position. |
| Poor Signal<br>INSTALL MODE<br>Poor Signal<br>Try turning DU | System will not function.<br>Turn the DU to another appropriate position. |
| Signal Overdrive<br>INSTALL MODE<br>Signal Overdrive<br>Try turning DU | Turn the DU to another appropriate position. |
| OUT OF SERVICE<br>System Fault<br>CHECK CABLE<br>CONNECTIONS | Check the RF cable and verify that it is connected properly. Make sure the length of the RF cable is less than 75 meters. |
| OUT OF SERVICE<br>System Fault<br>CALL PRODUCT<br>SUPPORT | Call product support.<br><br>Telephone #:<br>1-877-610-9586 |

**Table 1: CU Display States**

| Display with alternating display (if present) | Action (if required) |
|---|---|
| CHxxx<br>IN SERVICE | All OK.<br>No action required. |
| CHxxx<br>IN SERVICE | Signal weak, but working.<br>No action required. |
| OUT OF SERVICE<br>Signal Overdrive / OUT OF SERVICE<br>Try turning DU | Turn the DU to another appropriate position. |
| CHxxx<br>MOVE CU | Move the CU to an alternate location, preferable farther away from the DU. |
| OUT OF SERVICE<br>Poor Isolation / OUT OF SERVICE<br>Try moving CU | Move the CU to an alternate location, preferable farther away from the DU. |
| OUT OF SERVICE<br>Loss of Signal / OUT OF SERVICE<br>Searching . . . . | Temporary loss of service.<br>No action required |
| OUT OF SERVICE<br>Loss of Signal / OUT OF SERVICE<br>Try turning DU | Loss of service for more than 24 hours.<br>Turn the DU to another appropriate position. |

**Table 1: CU Display States**

The following table shows how dual band (SC141/142) differs from the other SpotCell systems.

| Display with alternating display (if present) | Action (if required) |
|---|---|
| CHxxx C<br>IN SERVICE<br>CHxxx P<br>IN SERVICE | All OK.<br>The C or P in the upper right indicates the position of the band select switch on the dual band CU.<br>No action required. |
| CHxxx C<br>INSTALL MODE<br>CHxxx P<br>INSTALL MODE | |

**Table 2: Dual band messages**

# 6 – Trouble-Shooting

1. **Status**: The display and LED on the bottom of the CU dynamically displays information regarding the SpotCell system and environment during installation and operation.

   **Action**: A red LED on the CU indicates a system alarm condition. Look at the information display to determine if the SpotCell system is indicating a fault.
2. **Status**: The LED on the DU is not illuminating during the installation.

   Action: Ensure the following:
   - The provided cable is connected to the CU and DU.
   - The power supply is connected to the CU.
   - The power supply is plugged into an electrical outlet.
   - The switch on the back of the CU is in the 'Install' position.
   - If the LED is still not illuminating, contact technical support.
3. **Status**: My cell phone does not work around the location I would like to install the SpotCell DU.

   **Action**: Try positioning the DU externally as high as possible.
4. **Status**: While optimizing the DU for installation, you found that the LED turned green in multiple locations, indicating each had adequate signal strength. How do you determine which location is optimal for the DU?

   **Action**: Look at the signal level indicated on the display on the bottom of the CU each time the green light appears on the DU during alignment. Mount the DU in the location as indicated having the highest signal level. Figure 6.1:"Displayed signal strength." below shows an example of the signal strength display.

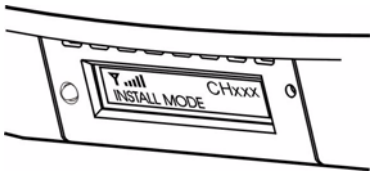


**Figure 6.1: Displayed signal strength.**

5. **Status**: The DU and CU are installed properly, but your cell phone only works in close proximity to the CU.

   **Action**: There are three factors that may be affecting coverage as described below:

   - Visually inspect the area around the CU. Ensure that there are not any large metallic objects directly between the CU and the area where cell phone coverage is not adequate. Remount the CU so that it is out in the open.
   - If the signal the DU is receiving is very weak (although still strong enough to allow operation), the area around the CU within which a cell phone can function will be relatively small. An effort can be made to improve system performance by raising or otherwise repositioning the DU in an effort to obtain a stronger signal. In Install mode, signal strength is shown on the CU display.
   - check with your vendor that your SpotCell product is compatible with your cell phone service.

6. **Status**: The coverage area around the CU suddenly shrinks after a long period of reliable operation.

   **Action**: This is most likely due to man made environmental influences such as a large building being erected somewhere in between the DU and the location the DU is receiving a signal from. Repeating the install procedure with the DU in its current position may improve system performance (i.e. Putting the CU switch into 'Install' and spinning the DU around twice, aligning it in the direction indicated by the green LED on the second spin.). If this does not help, the DU may have to be physically repositioned at a different location; going through the install procedure starting at xxxx is necessary at this point.

7. Information: **Remote installation SpotCell characteristics**.

   In order for the SpotCell system to function, there are two basic parameters that must be met. The DU must receive a minimum amount of wireless signal, and a physical environment that blocks wireless signals must be in between the DU and CU (i.e. a wall).

   If the DU is not receiving an adequate signal, the system will not work, or, it will work but provide a very limited area around the CU in which a cell phone will function. In this instance, it may be possible that only one cell phone will be capable of using the system at a time. This is typical of applications that are on the fringe, or outside of a wireless providers advertised coverage area. Improved performance will typically only be attained by moving the DU to a higher location.

8. Information: **Residential (or building) installations that do not provide for brick, concrete, metal, or other dense material between the DU and CU**.

   Action: In this situation it is possible that the signal emitted by the DU will be received by the CU. This will result in the system lowering the power of the signal it is emitting; and therefore the area around the CU in which a cell phone will function will become smaller. To improve performance in this scenario, it is important to:

   - Maximize the height of the DU
   - Separate the DU and CU horizontally as much as possible
   - Mount the DU and CU in a back-to-back manner.
   - It is recommended to use 50 meters of cable in between the DU and CU if possible in an effort to vertically and horizontally separate the system units.

9. Information: **Proper alignment rotation**

   Action: Make sure the DU is rotated once completely within the area available for rotation, and then move through the same rotation again. DU alignment is based on optimizing the direction the DU is facing after initially establishing the range of signal available by rotating the DU in a circle. Once the DU has been rotated in a circle and established the level of signal available, it now sets a threshold based on the surroundings to determine when the LED will illuminate green. If the DU is not pointing in a direction that is within a certain range of the highest signal it encountered since being in 'Install' mode, the LED will not turn green. Additionally, the LED will not illuminate green if a minimum signal level is not achieved during the initial rotation.

# Appendix A – SpotCell 100 System Specifications

Note: Spotwave Wireless has the right to change specifications without notice.

## 1.1 DU LED signal indications:

| | |
|---|---|
| RED | BS signal too low, or too high |
| YELLOW | BS signal is 5 dB or more below highest level but within operational range |
| GREEN | BS signal is within 5 dB of highest level |

## 1.2 Antenna Specifications:

| | DU Antenna | CU Antenna |
|---|---|---|
| Gain (dBi) | 10.0 | 0 ± 3.0 |
| Elevation Beamwidth - typical (dg) | 62 | 180 |
| Azimuth Beamwidth - typical (dg) | 50 | 175 |
| Front-to-Back Ratio (dB) | 20 | 12 |
| Polarization | Vertical | Horizontal |

## 1.3 Architecture

| | |
|---|---|
| Frequency Bands | Uplink: 824-849 MHz<br>Downlink: 869-894 MHz |
| Sub-Bands | Complete A or B sub-bands |
| Formats Supported | AMPS, CDMA/1xRTT, TDMA/GSM/GPRS/EDGE |
| Coverage Area | Fully adaptive, supports multiple simultaneous users<br>Up to 25,000 $ft^2$ (2350 $m^2$) |
| System Gain | Automatic, fully adaptive,<br>Maximum 93 dB downlink, 86 dB uplink |
| Downlink Operating Range | -106 to -44 dBm (receive isotropic power); coverage reduced at levels below -92 dBm |
| Overload Protection | Uplink: Fully adaptive<br>Downlink: Fully adaptive |
| Max. Input Level<br>(receive isotropic power) | Uplink: -10 dBm<br>Downlink: -44 dBm |
| Maximum Output RF Levels (radiated) | Uplink: +30 dBm EIRP maximum (composite)<br>Downlink: +7 dBm max (composite), 0 dBm (per channel) managed per channel |
| Third Order Intercept (radiated) | Uplink: +52 dBm EIRP<br>Downlink: +30 dBm EIRP |
| Power Supply | Universal power adapter with 6 ft AC cable and 20 ft DC cable.<br>AC Input: (120-240V)<br>DC Output: +7.5 VDC and +10.25 VDC that connects to the indoor unit. Outdoor unit power is supplied via the RF cable. |
| Power Consumption | < 28 W |

### 1.3.1 Physical

| | DONOR UNIT | COVERAGE UNIT |
|---|---|---|
| Operating Temperature | -40° to 130 F°<br>(-40° to +55° C) | 32° to +104° F<br>(0° to +40° C) |
| Size | 14 x 11 x 4 in.<br>(35 x 28 x 10 cm) | 7.5 x 5.5 x 2.5 in.<br>(19 x 14 x 6 cm) |
| Weight | 4 lb. (2 kg) | 2 lb. (1 kg) |
| RF Connectors | CU Port: Type F weatherproof | DU Port: Type F<br>Coverage Extension Port: MCX |
| RF Cable | Standard: RG6 Quad shielded 82 ft (25 m)<br>Alternate: RG11 Quad shielded 164 ft. (50 m)<br>Other: RG6 and RG11 Plenum rated | |

### 1.3.2 Installation

| | |
|---|---|
| Installation Time | Less than one hour typical |
| Outdoor Unit Alignment | No prior knowledge of base station location required.<br>Built in alignment algorithm (LED Indicator on outdoor unit). |
| Test Equipment | None required.<br>No RF knowledge required for installation.<br>Easy to read LCD display and LED indicators guide the installation. |
| User Controls | None, setup and operation is fully automatic. |

### 1.3.3 Diagnostics

| | |
|---|---|
| Fault Indicators | CU: LCD display and LED indicator<br>DU: LED used during installation only |
| Remote Connectivity | Serial data port on indoor unit |
| System Interrogation | LCD indicator on indoor unit |

### 1.3.4 Optional Coverage Extension Kit

| | |
|---|---|
| Coverage Area | Up to 10,000 $ft^2$ (925 $m^2$) |
| Antenna | 800 MHz (passive with same specifications as CU antenna) |
| Cables | Standard: RG6 Quad shielded 82 ft (25 m) c/w F connectors and MCX right angle adapter kit<br>Alternate: RG6 Plenum rated cable with above MCX adapter kit |

# Appendix B – SpotCell 111/112 System Specifications

Note: Spotwave Wireless has the right to change specifications without notice.

## 2.1 DU LED signal indications:

| | |
|---|---|
| RED | BS signal too low, or too high |
| YELLOW | BS signal is 5 dB or more below highest level but within operational range |
| GREEN | BS signal is within 5 dB of highest level |

## 2.2 Antenna Specifications:

| | DU Antenna | CU Antenna |
|---|---|---|
| Gain (dBi) | 12.0 | 0 ± 3.0 |
| Elevation Beamwidth - typical (dg) | 36 | 145 |
| Azimuth Beamwidth - typical (dg) | 46 | 160 |
| Front-to-Back Ratio (dB) | 26 | 15 |
| Polarization | Vertical | Horizontal |

## 2.3 Architecture

| | |
|---|---|
| Frequency Bands | Uplink: 1850-1910 MHz<br>Downlink: 1930-1990 MHz |
| Sub-Bands | Full (or partial) A, D, B, E, F & C bands<br>BW of 5, 7.5, 10, 15 or 20-MHz |
| Formats Supported | SP111 - GSM, TDMA, GPRS, EDGE<br>SP112 - CDMA/1xRTT/EVDO |
| Coverage Area | Fully adaptive, supports multiple simultaneous users<br>Up to 25,000 $ft^2$ (2300 $m^2$) |
| System Gain | Automatic, fully adaptive,<br>Maximum 92 dB downlink, 82 dB uplink |
| Downlink Operating Range | -106 to -44 dBm (receive isotropic power).<br>Coverage reduced at levels below -92 dBm. |
| Overload Protection | Uplink: Fully adaptive Downlink: Fully adaptive |
| Max. Input Level<br>(receive isotropic power) | Uplink: -5 dBm<br>Downlink: -44 dBm |
| Max. Output RF Levels (radiated) | Uplink: +30 dBm EIRP maximum (composite)<br>Downlink: +7 dBm max (composite), 0 dBm (per channel) managed per channel |
| Third Order Intercept (radiated) | Uplink: +50 dBm EIRP<br>Downlink: +30 dBm EIRP |
| Power Supply | Universal power adapter (6 ft AC cable and 20 ft DC cable)<br>AC Input: (120-240V)<br>DC Output: +7.5 VDC and +10.25 VDC that connects to the indoor unit. Outdoor unit power is supplied via the RF cable. |
| Power Consumption | < 28 W |

### 2.3.1 Physical

| | DONOR UNIT | COVERAGE UNIT |
|---|---|---|
| Operating Temperature | -40° to 130 F°<br>(-40° to +55° C) | 32° to +104° F<br>(0° to +40° C) |
| Size | 14 x 11 x 4 in.<br>(35 x 28 x 10 cm) | 7.5 x 5.5 x 2.5 in.<br>(19 x 14 x 6 cm) |
| Weight | 4 lb. (2 kg) | 2 lb. (1 kg) |
| RF Connectors | CU Port: Type F weatherproof | DU Port: Type F<br>Coverage Extension Port: MCX |
| RF Cable | Standard: RG6 Quad shielded 82 ft (25 m)<br>Alternate: RG11 Quad shielded 164 ft. (50 m)<br>Other: RG6 and RG11 Plenum rated | |

### 2.3.2 Installation

| | |
|---|---|
| Installation Time | Less than one hour typical |
| Outdoor Unit Alignment | No prior knowledge of base station location required.<br>Built in alignment algorithm (LED Indicator on outdoor unit). |
| Test Equipment | None required.<br>No RF knowledge required for installation.<br>Easy to read LCD display and LED indicators guide the installation. |
| User Controls | None, setup and operation is fully automatic. |

### 2.3.3 Indicators & Diagnostics

| | |
|---|---|
| Fault Indicators | CU: LCD display and LED indicator<br>DU: LED used during installation only |
| Remote Connectivity | Serial data port on indoor unit |
| System Interrogation | LCD indicator on indoor unit |

### 2.3.4 Optional Coverage Extension Kit

| | |
|---|---|
| Coverage Area | Up to 6,000 $ft^2$ (550 $m^2$) |
| Antenna | 1900 MHz (passive with same specifications as CU antenna) |
| Cables | Standard: RG6 Quad shielded 82 ft (25 m) c/w F connectors and MCX right angle adapter kit<br>Alternate: RG6 Plenum rated cable with above MCX adapter kit |

# Appendix C – SpotCell 163 System Specifications

Note: Spotwave Wireless has the right to change specifications without notice.

### 3.1 DU LED signal indications:

| | |
|---|---|
| RED (flashing) | BS signal too low, or too high. Adjacent band power may also be too high. |
| YELLOW (flashing) | BS signal is 5 dB or more below highest level but within operational range |
| GREEN (flashing) | BS signal is within 5 dB of highest level |

### 3.2 Antenna Specifications:

| | DU Antenna | CU Antenna |
|---|---|---|
| Gain (dBi) | 10 | 0 ± 3 |
| Elevation Beamwidth - typical (dg) | 62 | 115 |
| Azimuth Beamwidth - typical (dg) | 50 | 105 |
| Front-to-Back Ratio (dB) | 20 | 12 |
| Polarization | Vertical | Horizontal & Vertical |

## 3.3 Architecture

| | |
|---|---|
| Frequency Bands | Uplink: 806-821 MHz<br>Downlink: 851-866 MHz |
| Formats Supported | iDEN |
| Coverage Area | Fully adaptive, supports multiple simultaneous users<br>Up to 25,000 $ft^2$ (2300 $m^2$) |
| System Gain | Uplink: 0 to 90 dB (under control of adaptive algorithm)<br>Downlink: 0 to 90 dB (under control of adaptive algorithm) |
| Downlink Operating Range | -95 to -25 dBm (receive isotropic power). |
| Overload Protection | Uplink: Fully adaptive<br>Downlink: Fully adaptive |
| Typical 20 dB BW | Uplink: 18.3 MHz<br>Downlink: 18.0 MHz |
| Max. Output RF Levels (radiated) | Uplink: 40 dBm EIRP maximum (composite)<br>Downlink: 14 dBm max (composite), -6 dBm (per channel) managed per channel |
| Third Order Intercept (radiated) | Uplink: 60 dBm EIRP<br>Downlink: 33 dBm EIRP |
| Power Supply | Universal power adapter (6-ft AC cable and 20-ft DC cable)<br>AC Input: (120-240V)<br>DC Output: +3.8 VDC, +5.8 VDC and +27 VDC that connects to the CU, DU power is supplied via the RF cable. |
| Power Consumption | < 35 W |

### 3.3.1 Physical

| | DONOR UNIT | COVERAGE UNIT |
|---|---|---|
| Operating Temperature | -40° to 130 F°<br>(-40° to +55° C) | 32° to +104° F<br>(0° to +40° C) |
| Size | 14 x 11 x 4 in.<br>(35 x 28 x 10 cm) | 7.5 x 5.5 x 2.5 in.<br>(19 x 14 x 6 cm) |
| Weight | 6 lb. (3 kg) | 2 lb. (1 kg) |
| RF Connectors | CU Port: Type F weatherproof | DU Port: Type F;Coverage Extension Port: MCX |
| RF Cable | Standard: RG6 Quad shielded 82 ft (25 m)<br>Alternate: RG11 Quad shielded 164 ft. (50 m)<br>Other: RG6 and RG11 Plenum rated | |

### 3.3.2 Installation

| | |
|---|---|
| Installation Time | Less than one hour typical |
| Outdoor Unit Alignment | No prior knowledge of base station location required.<br>Built in alignment algorithm (LED Indicator on DU). |
| Test Equipment | None required.<br>No RF knowledge required for installation.<br>Easy to read LCD display and LED indicators guide the installation. |
| User Controls | None, setup and operation is fully automatic. |

### 3.3.3 Indicators & Diagnostics

| | |
|---|---|
| Fault Indicators | CU: LCD display and LED indicator<br>DU: LED used during installation only |
| Remote Connectivity | Serial data port on indoor unit |
| System Interrogation | LCD indicator on indoor unit |

### 3.3.4 Optional Coverage Extension Kit

| | |
|---|---|
| Coverage Area | Up to 6,000 $ft^2$ (550 $m^2$) |
| Antenna | 1900 MHz (passive with same specifications as CU antenna) |
| Cables | Standard: RG6 Quad shielded 82 ft (25 m) c/w F connectors and MCX right angle adapter kit<br>Alternate: RG6 Plenum rated cable with above MCX adapter kit |

# Appendix D – SpotCell 167 System Specifications

Note: Spotwave Wireless has the right to change specifications without notice.

## 4.1 DU LED signal indications:

| | |
|---|---|
| RED (flashing) | BS signal too low, or too high. No acceptable signals at “preferred channel” frequencies. Adjacent band power may also be too high. |
| YELLOW (flashing) | BS signal is 5 dB or more below highest level but within operational range |
| GREEN (flashing) | BS signal is locked onto an acceptable “preferred channel” |

## 4.2 Antenna Specifications:

| | DU Antenna | CU Antenna |
|---|---|---|
| Gain (dBi) | 10 | 0 ± 3 |
| Elevation Beamwidth - typical (dg) | 62 | 115 |
| Azimuth Beamwidth - typical (dg) | 50 | 105 |
| Front-to-Back Ratio (dB) | 20 | 12 |
| Polarization | Vertical | Horizontal & Vertical |

## 4.3 Architecture

| | |
|---|---|
| Frequency Bands | Uplink: 806-821 MHz<br>Downlink: 851-866 MHz |
| Formats Supported | SMR (Specialized Mobile Radio) |
| Coverage Area | Fully adaptive, supports multiple simultaneous users<br>Up to 25,000 $ft^2$ (2300 $m^2$) |
| System Gain | Uplink: 0 to 90 dB (under control of adaptive algorithm)<br>Downlink: 0 to 90 dB (under control of adaptive algorithm) |
| Downlink Operating Range | -95 to -25 dBm (receive isotropic power). |
| Overload Protection | Uplink: Fully adaptive<br>Downlink: Fully adaptive |
| Typical 20 dB BW | Uplink: 18.3 MHz<br>Downlink: 18.0 MHz |
| Max. Output RF Levels (radiated) | Uplink: 40 dBm EIRP maximum (composite)<br>Downlink: 14 dBm max (composite), -6 dBm (per channel) managed per channel |
| Third Order Intercept (radiated) | Uplink: 60 dBm EIRP<br>Downlink: 33 dBm EIRP |
| Power Supply | Universal power adapter (6-ft AC cable and 20-ft DC cable)<br>AC Input: (90-264V)<br>DC Output: +3.8 VDC, +5.8 VDC and +27 VDC that connects to the CU, DU power is supplied via the RF cable. |
| Power Consumption | < 35 W |

### 4.3.1 Physical

| | DONOR UNIT | COVERAGE UNIT |
|---|---|---|
| Operating Temperature | -40° to 130 F°<br>(-40° to +55° C) | 32° to +104° F<br>(0° to +40° C) |
| Size | 14 x 11 x 4 in.<br>(35 x 28 x 10 cm) | 7.5 x 5.5 x 2.5 in.<br>(19 x 14 x 6 cm) |
| Weight | 6 lb. (3 kg) | 2 lb. (1 kg) |
| RF Connectors | CU Port: Type F weatherproof | DU Port: Type F;Coverage Extension Port: MCX |
| RF Cable | Standard: RG6 Quad shielded 82 ft (25 m)<br>Alternate: RG11 Quad shielded 164 ft. (50 m)<br>Other: RG6 and RG11 Plenum rated | |

### 4.3.2 Installation

| | |
|---|---|
| Installation Time | Less than one hour typical |
| Outdoor Unit Alignment | No prior knowledge of base station location required.<br>Built in alignment algorithm (LED Indicator on DU). |
| Test Equipment | None required.<br>No RF knowledge required for installation.<br>Easy to read LCD display and LED indicators guide the installation. |
| User Controls | None, setup and operation is fully automatic. |

### 4.3.3 Indicators & Diagnostics

| | |
|---|---|
| Fault Indicators | CU: LCD display and LED indicator<br>DU: LED used during installation only |
| Remote Connectivity | Serial data port on indoor unit |
| System Interrogation | LCD indicator on indoor unit |

### 4.3.4 Optional Coverage Extension Kit

| | |
|---|---|
| Coverage Area | Up to 6,000 $ft^2$ (550 $m^2$) |
| Antenna | 1900 MHz (passive with same specifications as CU antenna) |
| Cables | Standard: RG6 Quad shielded 82 ft (25 m) c/w F connectors and MCX right angle adapter kit<br>Alternate: RG6 Plenum rated cable with above MCX adapter kit |

# Appendix E – SpotCell 141/142 System Specifications

Note: Spotwave Wireless has the right to change specifications without notice.

## 5.1 DU LED signal indications:

| | |
|---|---|
| RED | BS signal too low, or too high |
| YELLOW | BS signal is 5 dB or more below highest level but within operational range |
| GREEN | BS signal is within 5 dB of highest level |

## 5.2 Antenna Specifications:

| | DU Antenna | CU Antenna |
|---|---|---|
| Gain (dBi) | 12.0 | 0 ± 3.0 |
| Elevation Beamwidth - typical (dg) | 36 | 145 |
| Azimuth Beamwidth - typical (dg) | 46 | 160 |
| Front-to-Back Ratio (dB) | 26 | 15 |
| Polarization | Vertical | Horizontal |

## 5.3 Architecture

| | |
|---|---|
| Frequency Bands | PCS Uplink: 1850-1910 MHz Downlink: 1930-1990 MHz |
| | Cell Uplink: 824-849 MHz Downlink: 869-894 MHz |
| Sub-Bands | Full (or partial) A, D, B, E, F & C bands<br>BW of 5, 7.5, 10, 15 or 20-MHz |
| Formats Supported | SP141 supports dual band PCS & Cellular GSM<br>SP142 supports dual band PCS & Cellular CDMA |
| Coverage Area | Fully adaptive, supports multiple simultaneous users. Up to 25,000 $ft^2$ (2300 $m^2$) |
| Max. System Gain | Automatic, fully adaptive. Uplink: 82 dB, Downlink: 92 dB |
| Downlink Operating Range | -106 to -44 dBm (receive isotropic power).<br>Coverage reduced at levels below -92 dBm. |
| Overload Protection | Uplink: Fully adaptive<br>Downlink: Fully adaptive |
| Max. Input Level (receive isotropic power) | Uplink: -5 dBm<br>Downlink: -44 dBm |
| Max. Output RF Levels (radiated) | Uplink: +30 dBm EIRP maximum (composite)<br>Downlink: +7 dBm max (composite). Rated downlink output per carrier is 0dBm for a maximum of five carriers. If number of carriers exceeds five, per carrier power is reduced such that the composite downlink power never exceeds +7dBm EIRP for a nominal antenna gain of 0dBi.<br>For n carriers, the power per carrier is reduced by 10log n, for the stated composite power. |
| Third Order Intercept (radiated) | Uplink: +50 dBm EIRP<br>Downlink: +30 dBm EIRP |
| RF Port Impedance | DU RF port impedance = 75ohm<br>CU RF port impedance = 50ohm<br>CU Coverage Extension RF port impedance = 75ohm |
| Power Supply | Universal power adapter (6 ft AC cable and 20 ft DC cable)<br>AC Input: (120-240V)<br>DC Output: +7.5 VDC and +10.25 VDC that connects to the indoor unit. Outdoor unit power is supplied via the RF cable. |
| Power Consumption | < 50 W |

### 5.3.1 BW Measurements

| | |
|---|---|
| PCS UL | BW measured at 20dB down for 20MHz = 22.3MHz |
| PCS DL | BW measured at 20dB down for 20MHz = 22.7MHz |
| Cellular Band A DL | BW measured 20dB down = 23.5MHz |
| Cellular Band B DL | BW measured at 20dB down = 14.3MHz |

### 5.3.2 Physical

| | DONOR UNIT | COVERAGE UNIT |
|---|---|---|
| Operating Temperature | -40° to 130 F°<br>(-40° to +55° C) | 32° to +104° F<br>(0° to +40° C) |
| Size | 14 x 11 x 4 in.<br>(35 x 28 x 10 cm) | 7.5 x 5.5 x 5 in.<br>(19 x 14 x 12 cm) |
| Weight | 4 lb. (2 kg) | 3.2 lb. (1.5 kg) |
| RF Connectors | CU Port: Type F weatherproof | DU Port: Type F<br>Coverage Extension Port: MCX |
| RF Cable | Standard: RG11 Quad shielded 82 ft (25 m)<br>Standard: RG6 Quad shielded 6 ft. (2 m) x 2<br>Other: RG11 Plenum rated | |

### 5.3.3 Installation

| | |
|---|---|
| Installation Time | Less than one hour typical |
| Outdoor Unit Alignment | No prior knowledge of base station location required.<br>Built in alignment algorithm (LED Indicator on outdoor unit). |
| Test Equipment | None required.<br>No RF knowledge required for installation.<br>Easy to read LCD display and LED indicators guide the installation. |
| User Controls | None, setup and operation is fully automatic. |

### Indicators & Diagnostics

| | |
|---|---|
| Fault Indicators | CU: LCD display and LED indicator<br>DU: LED used during installation only |
| Remote Connectivity | Serial data port on indoor unit |
| System Interrogation | LCD indicator on indoor unit |

### 5.3.4 Optional Coverage Extension Kit

| | |
|---|---|
| Coverage Area | Up to 6,000 $ft^2$ (550 $m^2$) |
| Antenna | 1900 MHz (passive with same specifications as CU antenna) |
| Cables | Standard: RG6 Quad shielded 82 ft (25 m) c/w F connectors and MCX right angle adapter kit<br>Alternate: RG6 Plenum rated cable with above MCX adapter kit |

# Appendix F – Safety Hints

Customer safety is a concern we would like to address in a sensible and proactive manner. To this end, the following notes have been provided as a reference to help installers remain safe and think about safety in all aspects of the installation.

The following notes are to be considered as informational only, and not exhaustive or complete.

## F.1 Lightning

Never attempt to install the DU outdoors while a lightning storm is in progress in your immediate or neighboring vicinity. The National Lightning Institute says for every five seconds between the flash of lightning and a thunderclap, the lightning is one mile away. If lightning is within 3 miles (15 second count between flash and thunder) of your location, do not attempt an installation.

## F.2 Working Aloft

When working aloft, it is best to work in pairs. Avoid attempting procedures alone that are best carried out with a spotter or by two people.

### F.2.1 Power Tools

Proper eye protection should be worn when using a drill or any other type of power tool.

### F.2.2 Working with Ladders

Properly secure your ladder and work in pairs. Make sure the ladder is properly tied off and use an insulated ladder when working around power lines.

### F.2.3 Grounding

Ensuring the DU is properly grounded in external installations will help to prevent property damage and personal injury during lightening storms.

## F.3 Overhead Power Lines

While overhead power lines may appear to be insulated, they most likely are not insulated. Always thoroughly investigate your surroundings prior to installing masts or the DU in an outdoor location.

Never attempt installation without adequate lighting, as shadows and trees can obscure power lines.

Notes

Notes

Notes

coverage made simple

www.spotwave.com

Spotwave Wireless Inc. 1 Hines Road, Ottawa ON K2K 3C7 Canada

© 2006 Spotwave Wireless Inc. All rights reserved. Printed in Canada
Spotwave and SpotCell are trademarks of Spotwave Wireless Inc. Patents pending.

780-00001-01-04