SPOTWAVE

coverage made simple

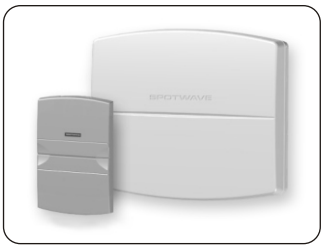

SpotCell® 2500Xe / 250Xe / 250He
User Manual

Technical Support

SpotCell® serial numbers must be available to authorize technical support and/or to establish a return authorization for defective units. The serial numbers are located on the back of the Coverage Unit (CU) and the Donor Unit (DU), as well as on the box in which they were delivered. Additional support information may be obtained by accessing the Spotwave Wireless Inc. website at **www.spotwave.com**. To contact support by telephone, call your local Spotwave vendor; or if you are unable to reach your vendor, contact Spotwave Wireless at **866-704-9750**.

Important Safety Information

Warning! For your safety, beware of power lines and ensure appropriate safety measures are maintained at all times during the installation of the SpotCell equipment. If equipment not shipped with the SpotCell system is to be used during installation or mounting, follow all equipment manufacturer's instructions in proper use to ensure injury is avoided.

The DU and CU of the SpotCell are low power transmitters. As with a cell phone antenna, avoid unneccessary contact with the front of the units when they units are operating. Mount the units in a location where people will not approach within 1 meter of the front of the DU and 20 centimeters in front of the CU.

When deploying the extended coverage antenna, there must be a minimum separation of 10 cm between the main CU and the extended coverage antenna with the antennas facing in opposite directions. The extended coverage antenna should be mounted in locations where people will not approach within 20 cm in front of the antenna.

This manual outlines installation instructions and the appendix offers practical safety tips (see Appendix E entitled 'Safety Hints').

If you are not sure about a safe installation, do not attempt to install it yourself. Call a professional installer for help.

LIMITED WARRANTY AND LIMITATION OF LIABILITY:

1. What is Covered and for How Long? Spotwave Wireless Inc. ("Spotwave") warrants to the original Purchaser that the Spotwave SpotCell System (the "System") is free from defects in material and workmanship under normal use and service for a period of 12 months from the date of shipment from Spotwave (the "Limited Warranty Period").

2. What is not covered? This Limited Warranty is conditioned upon proper use of the System by the Purchaser. This Limited Warranty does not cover (and will become null and void in the event of): (a) defects or damage resulting from accident, misuse, abuse, neglect, unusual physical, electrical or electromechanical stress, modification of the System or any part thereof, or cosmetic damage; (b) removal, alteration or defacing of the serial number or other identifying marks on the System; (c) all plastic surfaces and other externally exposed components that are scratched or damaged due to normal use; (d) malfunctions resulting from the use of the System in conjunction with accessories, products or (ancillary) or peripheral equipment not provided by Spotwave; or (e) defects or damage from unauthorized or improper testing, operation, maintenance, installation, servicing or adjustment of the System. Any repairs or replacements provided by Spotwave outside of the Limited Warranty Period (including repairs to or replacement after the end of the Warranty Period), or in excess of the services provided during the Limited Warranty Period, will subject to Spotwave's then prevailing rates.

3. What are Spotwave's Obligations and how do you make a claim? During the Limited Warranty Period, Spotwave will repair or replace, at Spotwave's sole option, without charge to Purchaser, any defective component of the System, provided that the System is returned promptly upon discovery of the defect and during the Limited Warranty Period. To obtain service, Systems must be returned to an authorized service facility in the original packaging or packaging adequate for shipping, accompanied by Purchaser's sales receipt or comparable substitute proof of sale showing the date of purchase and the serial number of the System. A valid RMA is required prior to any return.
To locate your nearest authorized service facility, call Spotwave Customer Service at 1-866-704-9750. Spotwave may, at Spotwave's sole option, use rebuilt, reconditioned, or new parts or components when repairing any System or replace a System with a rebuilt, reconditioned or new System. Repaired Systems

will be warranted for a period equal to the remainder of the original Limited Warranty Period for the original System or for 90 days, whichever is longer. All replaced parts, components, boards or equipment shall become the property of Spotwave. If Spotwave determines that any System is not covered by this Limited Warranty, Purchaser must pay the costs for all parts, shipping, and labor charges for the repair or return of such System.

4. What are the Limits on Spotwave's Liability? EXCEPT FOR THE WARRANTY IN PARAGRAPH 1, THE SYSTEMS AND ANY ASSOCIATED SERVICES ARE PROVIDED BY SPOTWAVE ON AS 'AS IS' BASIS AND THERE ARE NO OTHER REPRESENTATIONS, WARRANTIES OR CONDITIONS, EXPRESS OR IMPLIED, WRITTEN OR ORAL, ARISING BY STATUTE, OPERATION OF LAW, COURSE OF DEALING, USAGE OF TRADE OR OTHERWISE, REGARDING THEM OR ANY OTHER PRODUCT OR SERVICE PROVIDED HEREUNDER OR IN CONNECTION HEREWITH BY SPOTWAVE. SPOTWAVE DISCLAIMS ANY IMPLIED WARRANTIES OR CONDITIONS OF DURABILITY, MERCHANT ABILITY, MERCHANTABLE QUALITY, SATISFACTORY QUALITY, NON-INFRINGEMENT OR FITNESS FOR A PARTICULAR PURPOSE. SPOTWAVE DOES NOT REPRESENT OR WARRANT THAT THE SYSTEMS WILL MEET ANY OR ALL OF PURCHASERS' PARTICULAR REQUIREMENTS, THAT THE SYSTEMS WILL OPERATE ERROR-FREE OR UNINTERRUPTED OR THAT ALL ERRORS OR DEFECTS IN THE SYSTEMS CAN BE FOUND TO BE CORRECTED. System performance is dependant upon the performance and availability of services or technology provided by third parties and Spotwave is not responsible for service continuity and reliability, reception, or other performance related limitations associated with use of the Systems. NO AGREEMENTS VARYING OR EXTENDING THE TERMS OF THIS LIMITED WARRANTY WILL BE BINDING ON SPOTWAVE UNLESS IN WRITING AND SIGNED BY AN AUTHORIZED SIGNING OFFICER OF SPOTWAVE THIS LIMITED WARRANTY SHALL NOT EXTEND TO ANYONE OTHER THAN THE ORIGINAL PURCHASER OF THE SYSTEM. SPOTWAVE'S MAXIMUM AGGREGATE LIABILITY TO PURCHASER SHALL NOT EXCEED THE AMOUNTS PAID BY PURCHASER FOR THE SYSTEM GIVING RISE TO THE CLAIM. SPOTWAVE SHALL NOT BE LIABLE FOR ANY SPECIAL, INCIDENTAL, CONSEQUENTIAL, INDIRECT OR SIMILAR DAMAGES, LOSS OF USE, DATA OR PROFITS, DAMAGES TO PURCHASER'S PROPERTY, OR INJURY TO PURCHASER OR OTHERS ARISING OUT OF THE USE, MISUSE OR INABILITY TO USE ANY SYSTEM, WHETHER OR NOT SUCH DAMAGE ARISES OUT OF CONTRACT OR TORT (INCLUDING WITHOUT LIMITATION, NEGLIGENCE) OR CLAIMS BY A THIRD PARTY, EVEN IF SPOTWAVE HAS BEEN ADVISED OF SUCH DAMAGES OR THEY ARE FORESEEABLE

5. This Limited Warranty allocates risk between Purchaser and Spotwave, and the Spotwave System pricing reflects this allocation of risk and the limitations of liability contained in this Limited Warranty. The agents, employees, distributors, dealers or representative of Spotwave are not authorized to make modifications to this Limited Warranty, or make additional warranties binding on Spotwave. Accordingly, additional statements such as advertising or presentations, whether oral or written, do not constitute warranties by Spotwave and should not be relied upon.

OWNERSHIP AND RISK OF LOSS:

6. Who Owns the rights in the System? The System is protected by Canadian, US and international copyright law and other intellectual property protection laws and treaties. Purchaser acknowledges that Spotwave and its licensors are the owner of all intellectual property, including, without limitation, patents and copyright,

relating to the System and the trademarks used in association with the System. Purchaser agrees that it will not (and will not attempt to) modify, prepare derivative works of, reverse engineer, decompile, disassemble, or other attempt to derive the source code of any software contained within the System.

7. Who bears the Risk of Loss? Risk of loss for the System passes to Purchaser upon the delivery to Purchaser or to a carrier for shipment, which ever is earlier. Title to the Systems (excluding any software) will pass upon payment in full for the Systems. Title to any software shall always remain with Spotwave or its licensors. As security for payment, Purchaser grants to Spotwave a purchase money security interest in the Systems (together with any proceeds, including insurance proceeds) and agrees that a copy of this letter of agreement or any other appropriate document may be registered as required to perfect the security interest granted. Systems may be resold by Purchaser in normal course of business, but until paid for in full, Purchaser will not pledge or otherwise encumber the Systems. Purchaser agrees to immediately report to Spotwave, any seizure or attachment of the Systems by creditors; (ii) any petition in bankruptcy, insolvency, receivership or similar proceedings filed by, or against Purchaser; or (iii) any arrangement, composition or similar agreement for the benefit of creditors. Systems held for Purchaser by Spotwave are at Purchaser's sole risk and expense.

OTHER TERMS:

8. What terms govern our relationship? These terms and any software license or warranty documentation accompanying the Systems constitute the complete and exclusive statement of the terms and conditions between us regarding the Systems and cannot be altered, amended or modified except in writing executed by Spotwave. This letter of agreement and any disputes arising hereunder shall be governed by and interpreted in accordance with the laws of the Province of Ontario, Canada. The United Nations Convention on Contracts for the International Sale of Goods and any legislation implementing such Convention, if otherwise applicable is expressly excluded. Any terms and conditions of any purchase order or other instrument issued by Purchaser which are in addition to or inconsistent with the terms and conditions of this letter of agreement shall not be binding and shall not apply, even if accepted by Spotwave.

MANUAL DISCLAIMER

Product specifications, pricing, packaging, technical support and information ("Specifications") and all claims, features, representations, and/or comparisons provided are correct to the best of our knowledge of the date of publication, but may contain errors or omissions and are subject to change without notice.

INFORMATION IS PROVIDED BY SPOTWAVE WIRELESS INC. ON AN "AS IS" BASIS, WITHOUT ANY OTHER WARRANTIES OR CONDITIONS, EXPRESS OR IMPLIED, INCLUDING, BUT NOT LIMITED TO, WARRANTIES OF MERCHANTABLE QUALITY, SATISFACTORY QUALITY, MERCHANTABILITY OR FITNESS FOR A PARTICULAR PURPOSE, OR THOSE ARISING BY LAW, STATUTE, USAGE OF TRADE, COURSE OF DEALING OR OTHERWISE. THE ENTIRE RISK AS TO THE RESULTS OF THE INFORMATION PROVIDED IS ASSUMED BY YOU. WE SHALL HAVE NO LIABILITY TO YOU OR ANY OTHER PERSON OR ENTITY FOR ANY INDIRECT, INCIDENTAL, SPECIAL, OR CONSEQUENTIAL DAMAGES WHATSOEVER, INCLUDING, BUT NOT LIMITED TO, LOSS OF REVENUE OR PROFIT, LOST OR DAMAGED DATA OR OTHER COMMERCIAL OR ECONOMIC LOSS, EVEN IF WE HAVE BEEN ADVISED OF THE POSSIBILITY OF SUCH DAMAGES, OR THEY ARE FORESEEABLE. WE ARE ALSO NOT RESPONSIBLE FOR CLAIMS BY A THIRD PARTY. OUR MAXIMUM AGGREGATE LIABILITY TO YOU AND THAT OF OUR DEALERS AND SUPPLIERS SHALL NOT EXCEED FOURTY DOLLARS. SOME STATES/COUNTRIES DO NOT ALLOW THE EXCLUSION OR LIMITATION OF LIABILITY FOR CONSEQUENTIAL OR INCIDENTAL DAMAGES, SO THE ABOVE LIMITATIONS MAY NOT APPLY TO YOU. All product, font and company names are trademarks or registered trademarks of their respective owners.

Table of Contents

Technical Support i

Important Safety Information i

LIMITED WARRANTY AND LIMITATION OF LIABILITY: i

Introduction 1
- This Manual 1
- No Special Knowledge 1
- SpotCell System at a Glance 1

Installation 9
- Preparation 9
- Packing List 11
- Choosing a location for the DU 13
- Choosing a location for the CU 17
- Positioning the 2500Xe Auxiliary CU 20
- Positioning the 250Xe/250He CU 21

Mounting the DU and CU 23
- Mounting the DU 23
- Mounting the CU 29
- Using the Hidden Cable kit 31
- CU Ceiling Mount kit 34

Trouble-Shooting 35

2500Xe System Specifications 37

250Xe System Specifications 43

250He System Specifications 49

FCC Declaration of Conformity 55

Health and Authorization for Use 55

1 – Introduction

1.1 This Manual

The content of this manual complements the SpotCell® 2500Xe, 250Xe, and 250He Quick Install Guides. It provides specific details that may be referred to if necessary during installation of a SpotCell adaptive coverage system.

1.2 No Special Knowledge

Installation of the SpotCell 2500Xe and SpotCell 250 series does not require any specialized technical knowledge.

The SpotCell coverage system can be installed by any person(s) with the ability to use a screwdriver, and in some situations may require the use of a ladder, drill, and additional related tools.

1.3 SpotCell System at a Glance

The purpose of the SpotCell system is to enable personal wireless communications in specific locations within a wireless service area where cell phones do not work, or work poorly, for example inside a building, or at the cell boundary.

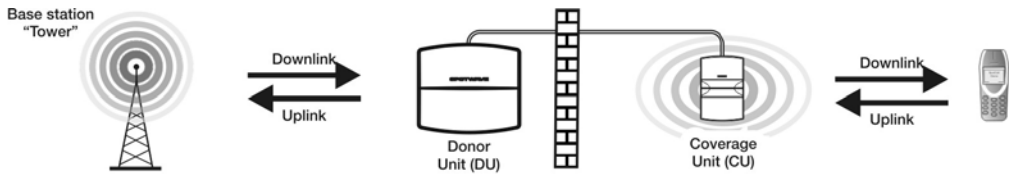

The SpotCell system receives signals from one or more wireless base stations and relays the signal to areas where cell phones do not work or work poorly due to obstructions or the remoteness of the location.

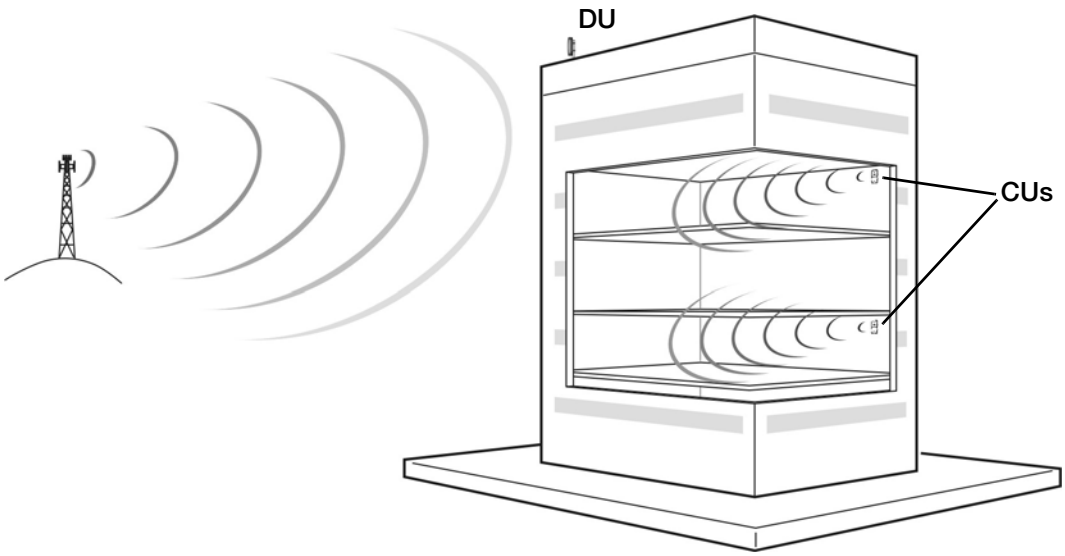

Figure 1.1: SpotCell 2500Xe in-building coverage

The basic SpotCell adaptive coverage system is comprised of a Donor Unit (DU), a Coverage Unit (CU) and a power supply. The DU is the outward facing part of the system that communicates with the base station. The DU is connected (via coaxial cable) to the CU which provides wireless coverage to indoor areas.

The SpotCell 2500Xe and 250Xe adaptive systems are capable of dual band and split band coverage and provide band-selective, on-frequency, in-building coverage in the cellular and PCS bands. The SpotCell 250He is also capable of split band coverage, but is PCS only.

The SpotCell system uses proprietary, patented, adaptive techniques that allow a SpotCell solution to be installed and operated without engineering intervention or support.

1.3.1 The Donor Unit (DU)

The DU has a 2 meter (6 foot) RG6 coaxial cable on the bottom and indicators for showing received signal strength and system status on the back.

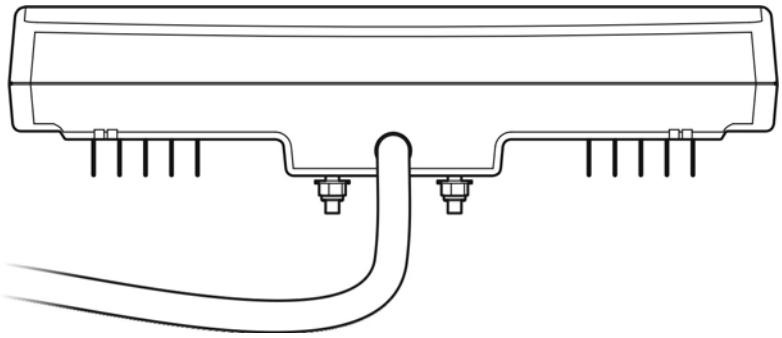

Figure 1.2: Bottom view of DU and cable

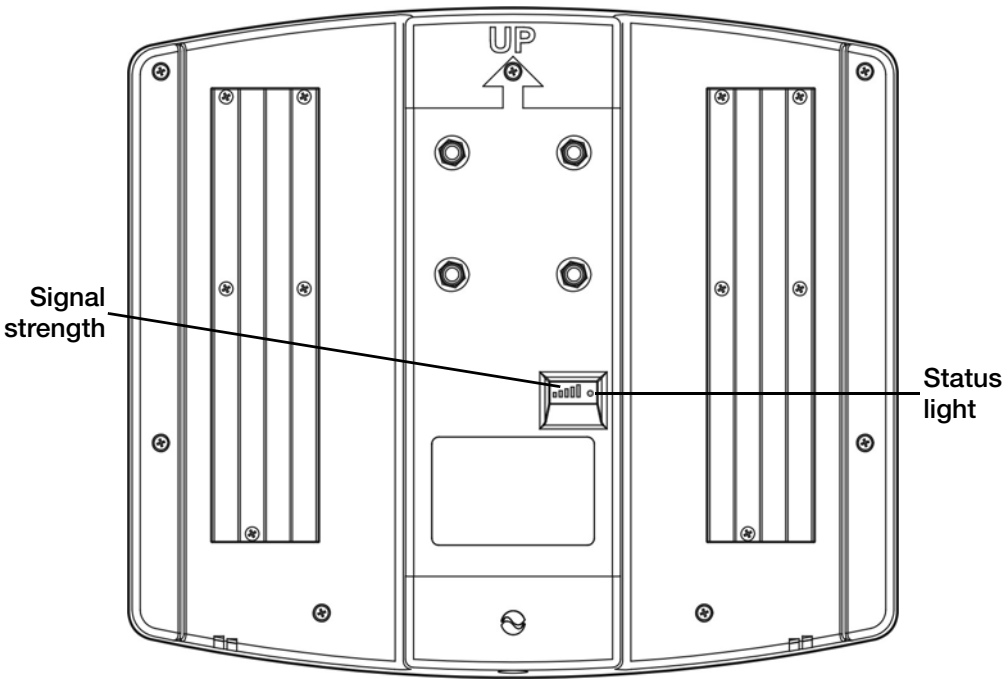

Figure 1.3: Back view of DU

1.3.2 The 2500Xe Coverage Unit

The CU has two F-type coaxial ports, a power adapter port and indicators for showing coverage level and system status.

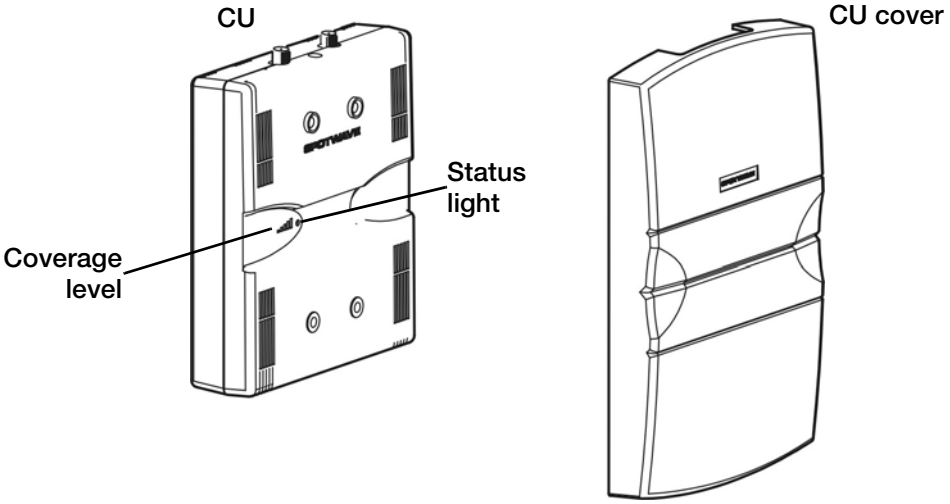

Figure 1.4: 2500Xe CU with cover removed

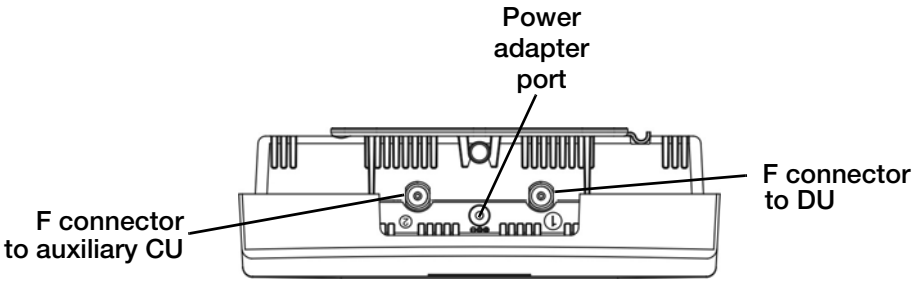

Figure 1.5: Top view of 2500Xe CU and connectors

The SpotCell 2500Xe is generally format specific - CDMA/1xRTT/1xEVDO and TDMA/GSM/GPRS/EDGE formats. When ordering a SpotCell solution be sure to specify the format, frequency band and sub-band. For PCS band equipment, it is helpful if the

start and stop frequencies for the operational sub-band are provided. Alternatively, specifying your mobile phone provider (carrier) and zip/postal code on the Spotwave website will ensure the proper system is ordered.

1.3.3 The 250Xe/He Coverage Unit

The CU for the SpotCell 250Xe and 250He is smaller but simliar to that of the 2500Xe. It has two F-type coaxial ports, a power adapter port and LED power indicator on the front.

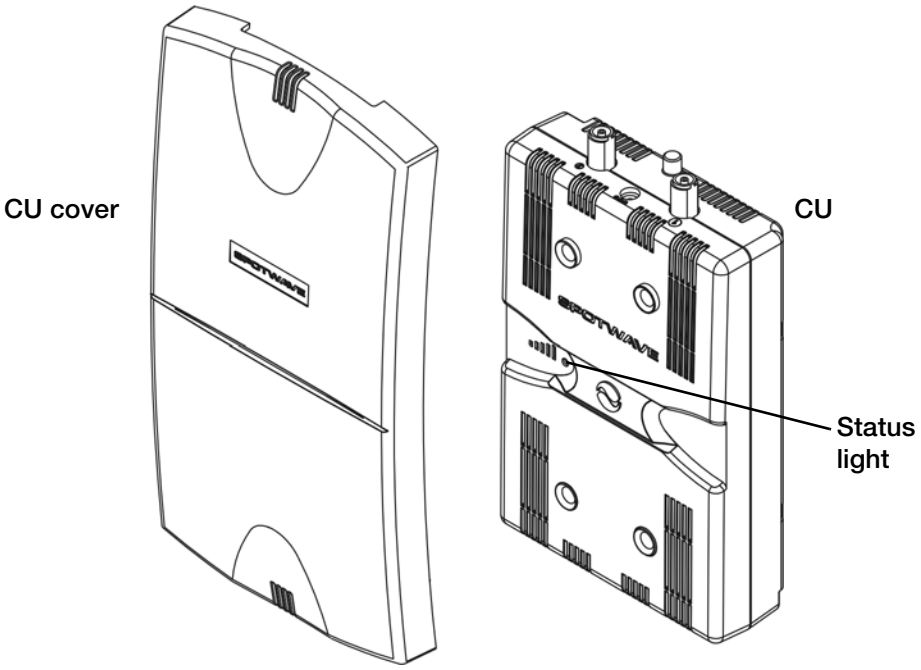

Figure 1.6: 250 series CU with cover removed

The SpotCell 250Xe/He is generally format specific - CDMA/1xRTT/1xEVDO and TDMA/GSM/GPRS/EDGE formats. When ordering a SpotCell solution be sure to specify the format, frequency band and sub-band

1.3.4 SpotCell 2500Xe/250Xe/250He Configurations

The basic SpotCell system configuration is one DU connected with a coaxial cable to a CU which is connected to an AC adapter that supplies power to both units.

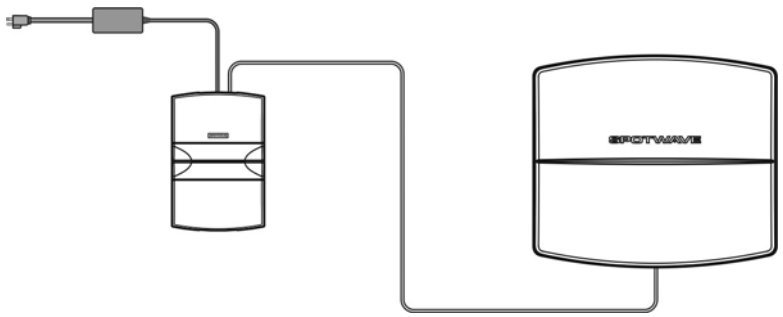

Figure 1.7: Basic SpotCell configuration

With the Hidden Cable kit, a BIAS-T (power inserter) can be used to discreetly power the system or power the system from a more conveniently located AC outlet.

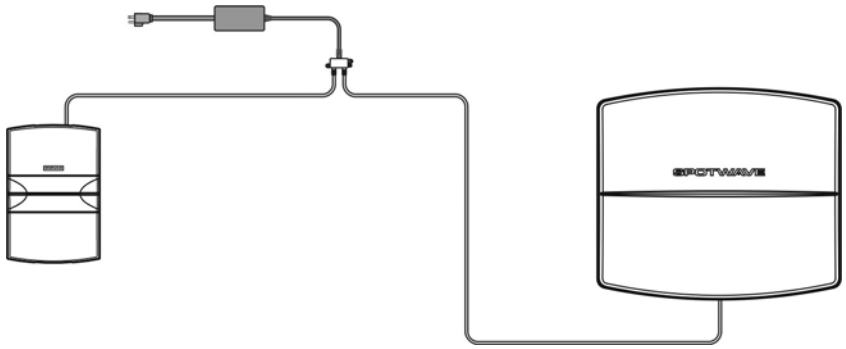

Figure 1.8: SpotCell configured with BIAS-T

To expand the coverage area, a second CU can also be added to the 2500Xe system.

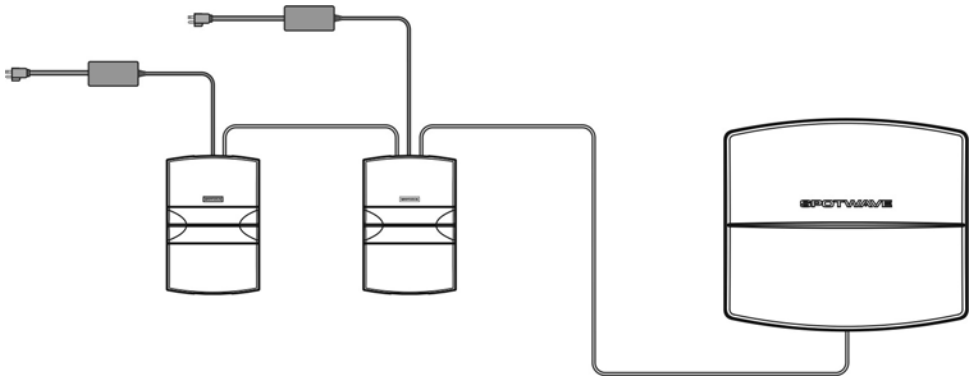

Figure 1.9: SpotCell 2500Xe configured with second Coverage Unit

WIth a second CU in the system, one or two BIAS-T (power inserters) from the Hidden Cable kit can be used. The BIAS-T can be located between the DU and CU, between the two CUs, or both.

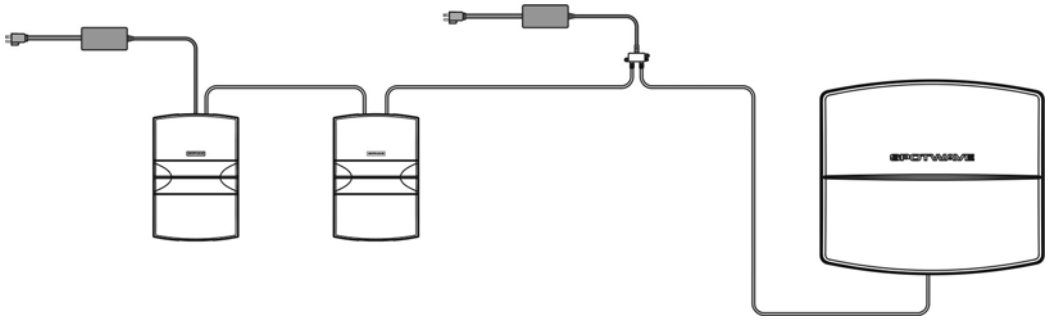

Figure 1.10: BIAS-T installed between DU and CU

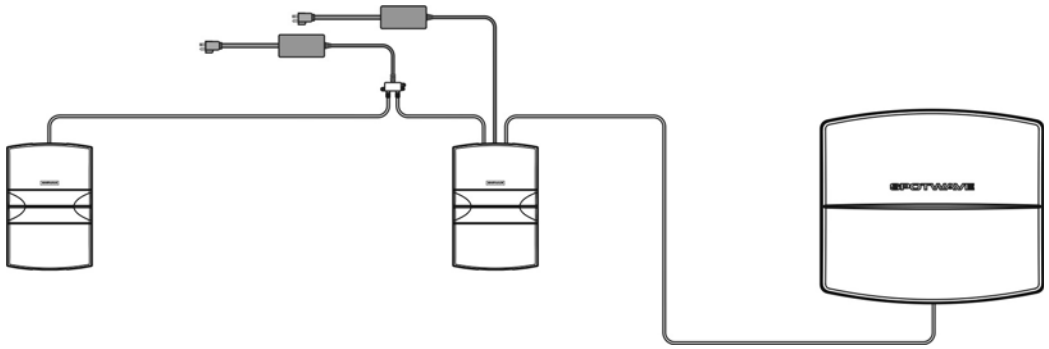

Figure 1.11: BIAS-T installed between main CU and auxiliary CU

2 – Installation

2.1 Preparation

The following are general considerations and preparations that should be looked at before installing the SpotCell 2500Xe/250Xe/250He system.

2.1.1 Signal Strength

The SpotCell system brings signals from an area of adequate coverage to an area with poor or non-existent coverage. It is the DU which captures a good signal, and the CU that provides the signal to the area with poor cell phone coverage. The DU can be mounted inside or outside, as long as it is in an area where your cell phone works. Generally, the better your cell phone works at the location the DU is mounted, the better the system will perform.

2.1.2 DU Height

In fringe areas, locating the DU as high as possible will provide optimal performance.

2.1.3 Avoid obstructions

General placement of the DU and CU must be in unobstructed areas. For example, the CU should not be placed on a wall behind any type of furniture (behind items such as metal filing cabinets would be a particularly poor location). Similarly for the DU, the front of the unit should not be directly facing any type of metal structures, which are often found on building rooftops.

2.1.4 Proximity to power source

The indoor unit (CU) must be located within 20 feet (6 meters) of a power source, unless the Hidden Cable kit is used. This kit includes a BIAS-T (power inserter) that allows the system to be powered from a AC outlet located within 20 feet (6 meters) anywhere along the coaxial cable.

2.1.5 Distance between DU and CU

Although you should separate the DU and CU as much as possible, the maximum length of RG-6 cable that can be used to connect the two units is 164 feet (50 meters). For greater DU to CU separation, RG-11 double shielded cable can be used to connect the two units. Using RG-11 cable extends the maximum DU to CU distance to 328 feet (100 meters).

Plenum rated RG-6 and RG-11 cable may also be used for installations in return air ceilings, floor to floor riser use and elevator shafts. The maximum Plenum cable lengths that can be used are 147 feet (45 meters) for RG-6 and 295 feet (90 meters) for RG-11.

	non-Plenum	Plenum
RG-6	115 ft (35 m)	100 ft (30 m)
RG-11	245 ft (75m)	215 ft (65 m)

Table 1: Maximum cable length for connecting units

Exceeding the cable lengths listed in Table 1 will result in reduced system coverage. Make sure the general location of the two units is within these limits. Use only Spotwave Wireless approved cable.

Note: Although you should separate the DU and CU as much as possible, 10 ft (3 m) is the minimum cable length required between units for the SpotCell 2500Xe system.

2.1.6 Distance between main CU and auxiliary CU

The maximum cable lengths that can be used to connect two CUs is the same as that for connecting a CU and DU (see Table 1). Maximum separation of the CUs and back-to-back positioning will optimize system performance.

2.1.7 Orientation of DU relative to CU

If possible face the DU and CU in opposite directions, and back to back while maintaining maximum separation. While not a requirement, some installations will perform better if the units are positioned in this manner. This is generally more important for an inside mounted DU than one mounted outside on a roof or an external wall.

2.1.8 Barrier between DU and CU

The greater the physical obstruction between the DU and CU, the better the performance. Dense obstructions such as brick, concrete or metal walls are better than wooden or plaster walls.

2.2 Packing List

This section describes the components that ship with the SpotCell 2500Xe system and the available options.

2.2.1 SpotCell basic system

The SpotCell solution is shipped with the following components:

- Donor Unit (DU) - this is the outward facing part of the system.
- Coverage Unit (CU) - this is the indoor part of the system.
- Power Adapter - to be plugged into an electrical outlet and connected to the CU.
- Mounting Kit - for mounting the DU and CU
- Quick Installation Guide

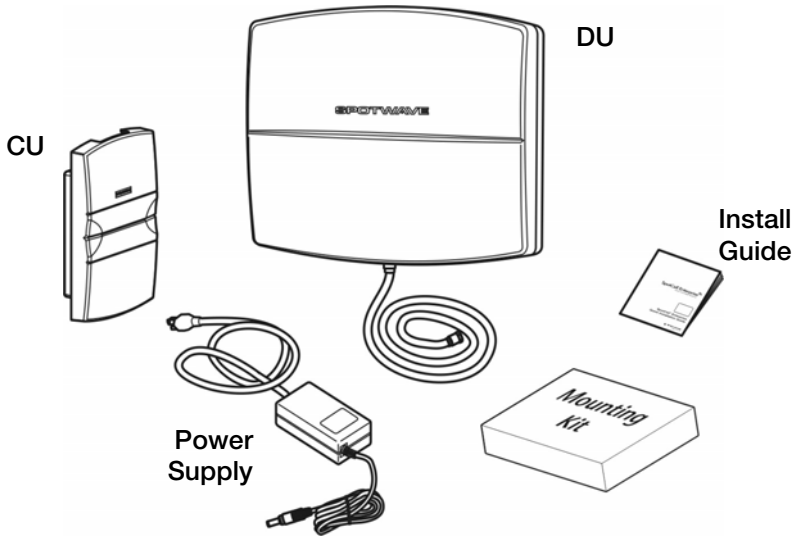

Figure 2.1: SpotCell 2500Xe kit

2.2.2 SpotCell 2500Xe Auxiliary CU

The SpotCell 2500Xe Auxiliary CU kit is shipped with the following components:

- Auxiliary CU - this is the second indoor part of the system.
- Power Adapter - to be plugged into an electrical outlet and connected to the CU.
- Mounting kit

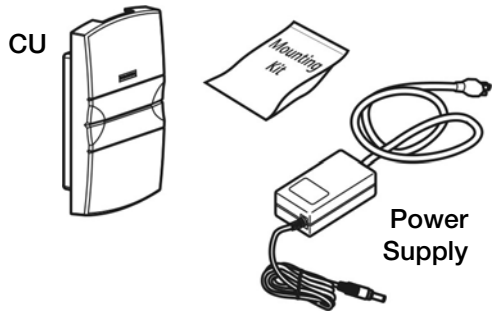

Figure 2.2: SpotCell 2500Xe Auxiliary CU kit

Note: The coaxial cable needed to connect the CU to the DU can either be ordered from Spotwave Wireless or can be supplied by the installer.

2.2.3 Hidden Cable Kit

The Hidden Cable kit makes it easier to hide the RF and power cables that are normally connected directly to the CU.

The Hidden Cable kit is shipped with the following components:

- 90º F connectors (2)
- BIAS-T (power inserter)
- cut-in mounting ring

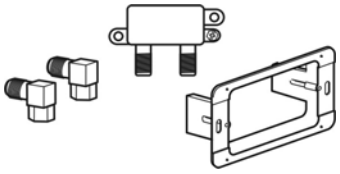

Figure 2.3: Hidden Cable kit

The BIAS-T (power inserter) is for indoor use only and cannot be installed outdoors.

2.2.4 DU Outdoor Install Kit

When the DU is mounted outside, the SpotCell Enterprise system requires additional lightning protection components that are included in the DU Outdoor Installation kit along with an extra angle mount, grounding block and U-bolts.

Note: You may also need to purchase additional hardware specific to your mounting environment (such as a non-penetrating roof mount) before you begin the installation.

2.2.5 Unpacking the Equipment

Physically inspect the box for shipping damage before unpacking the SpotCell System.

1. Remove the SpotCell components from the box.
2. Remove all packing material from the Donor Unit (DU) and the Coverage Unit (CU). Save the packaging in case the system is ever stored or shipped for service.
3. Check the contents of the package to make sure you have received everything ordered and the kits contains all the listed parts.

Check the DU and CU for shipping damage. Pay particular attention to the unit's outer shell casing.

2.3 Choosing a location for the DU

The DU is the outward facing unit. It is the unit that picks up the signal from and communicates with the service providers base station network.

It may not be possible to install the DU indoors when installing the SpotCell solution in remote areas. An effort should be made to install the DU outdoors and the DU should be installed as high as possible when the installation is in a remote area.

Use your mobile phone handset to identify the inside location with the strongest received signal, or the outside roof or external wall location where the strongest signal is received.

2.3.1 Positioning the DU

The following outlines the procedure for locating a DU inside a building, on a rooftop, and on the outside surface of an external wall.

1. Remove the angle bracket from the DU and position the DU (but do not mount it) as close to the final desired mounting location as possible.

Indoors	Outside on a Roof	Outside on an External Wall
While not a requirement, it is highly recommended the DU be installed 3 to 4 feet away from the glass when facing a window[a].	The CU should not be brought outdoors if it is raining, below freezing or above 105 F° (40 C°).	

a. Tinted windows may contain metallic particles which can degrade the radio signal more than the adjacent exterior wall.

2. Temporarily connect the DU to the port labeled ① on the top of the CU with copper core coax cable. The 10 ft (3 m) cable already attached to the DU can used to make this temporary connection.

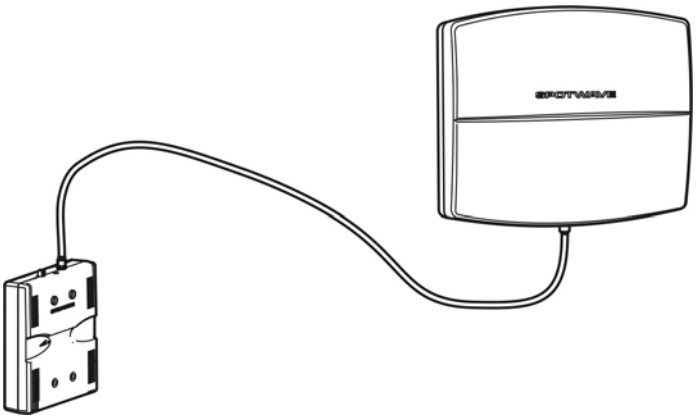

Figure 2.4: Temporarily connect CU to DU

3. Connect the power supply to the CU and plug the power supply adapter into a wall socket.

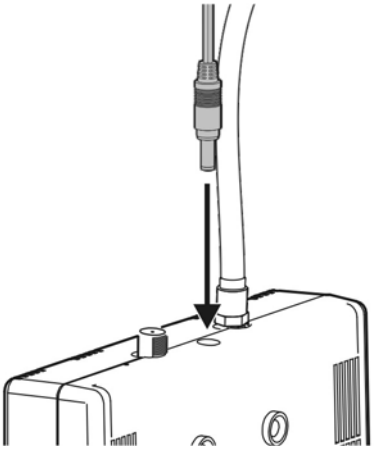

Figure 2.5: Connect power to CU

Note: Only use the power supply provided with the SpotCell system. Connecting a power supply from another SpotCell system may damage the unit and cause it to fail.

4. **Alignment.** Hold the DU upright and pointing away from you, while:

Indoor DU	Outdoor DU On a Roof	Outdoor DU on an External Wall
Rotating the DU left to right with the DU facing to the outside through the window or exterior wall. 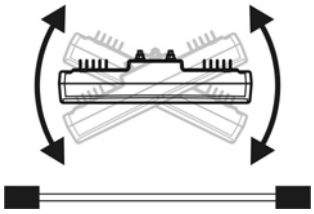 **Window or Exterior Wall** If not in front of a window, rotate the DU in a complete 360° circle.	Rotating the DU in a complete 360° circle. 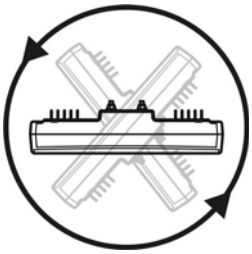	Rotating the DU left to right with the DU facing away from the exterior wall. **Exterior Wall** 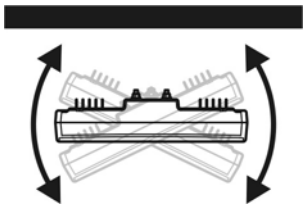

Monitor the number of bars displayed on the signal strength indicator during the rotation. The number of bars is an indication of the signal strength the DU is receiving from the wireless base station. See *DU signal level indicators:* on page 39 for details on the signal level indicator.

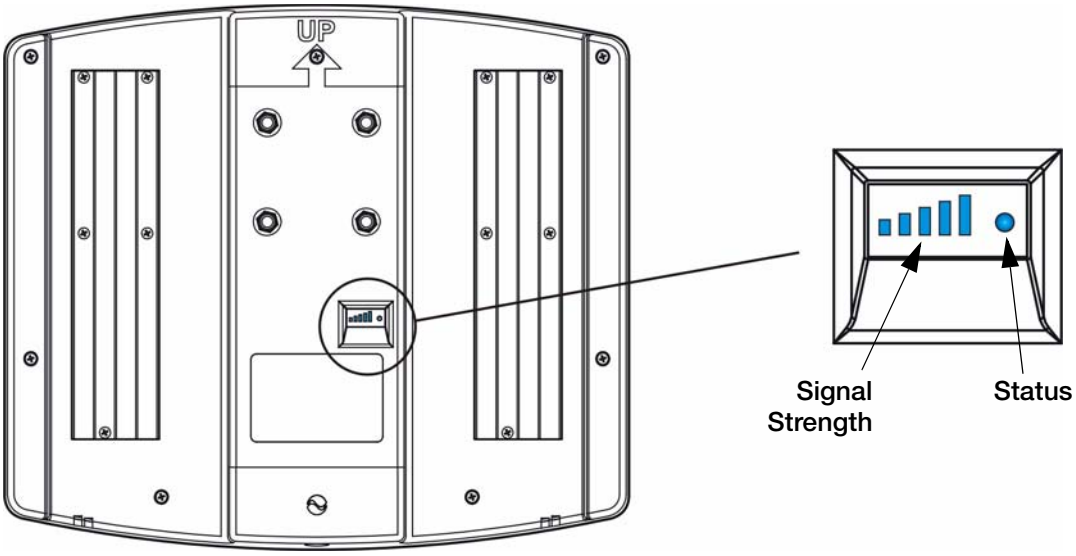

Figure 2.6: Signal strength indicator on back of DU

5. Note the direction the DU is facing when the greatest number of bars is displayed and the Status LED is blue (no faults).

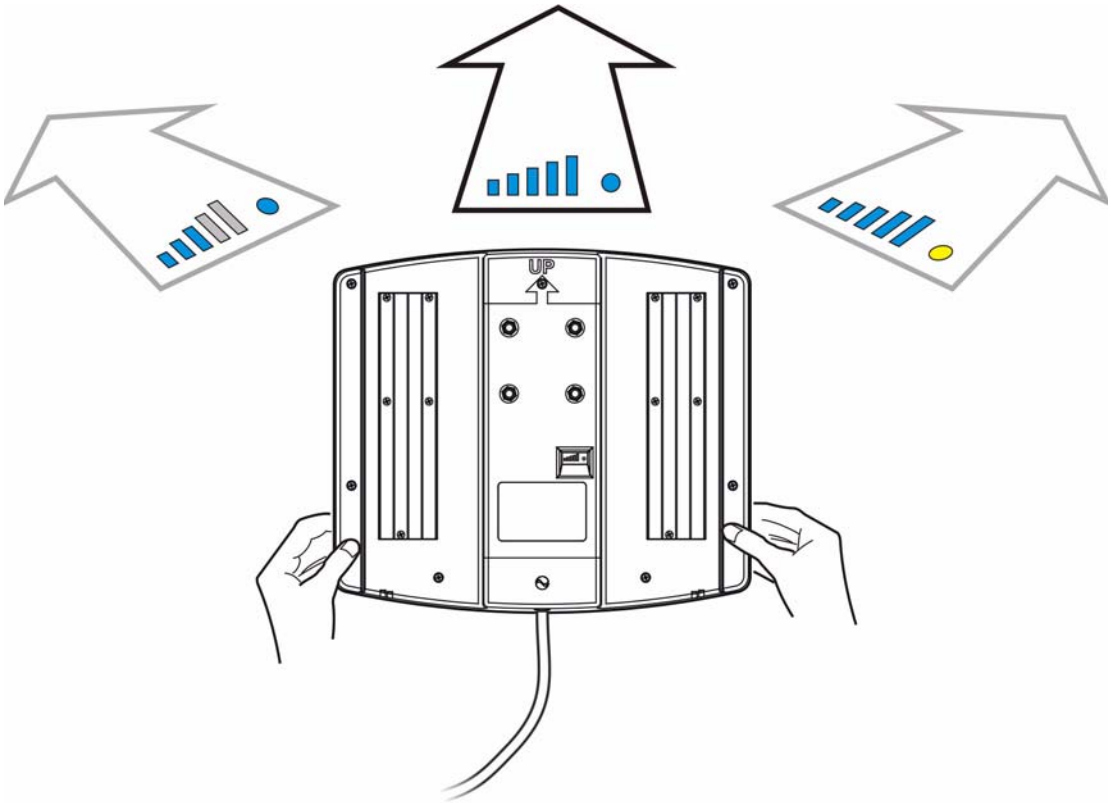

Figure 2.7: Note the DU direction with maximum number of bars and no faults

This is the direction the DU must face when it is mounted. When multiple locations show the same greatest number of bars, mount the DU facing in the direction where the number of bars was displayed for the longest period of time during rotation.

It is recommended that various outside roof and exterior wall locations, and locations within the building be tested to identify the best DU location. On the upper floors of tall buildings, it may be necessary to tilt the DU down to get the strongest signal.

6. Proceed to mounting the DU (in the location that has the highest indicated signal level) and installing the coaxial cable (see "*Mounting the DU* on page 23").

   After the DU is mounted, it is recommended that you temporarily re-connect the CU to the DU and quickly verify that the expected greatest number of bars (as found in steps 4 and 5) is displayed.

2.4 Choosing a location for the CU

The CU location is optimized, after the DU location and orientation have been optimized, the DU has been mounted, and the copper core coaxial cable has been pulled from the DU to the location requiring improved coverage.

Generally, the CU should be mounted in a location as far as possible behind the DU, while being within the area where you require improved coverage and within reach of the maximum allowed cable length (see Table 1 on page 10)

If mounted on a wall, the coverage pattern for an open area with minimum obstructing walls is as shown in Figure 2.8.

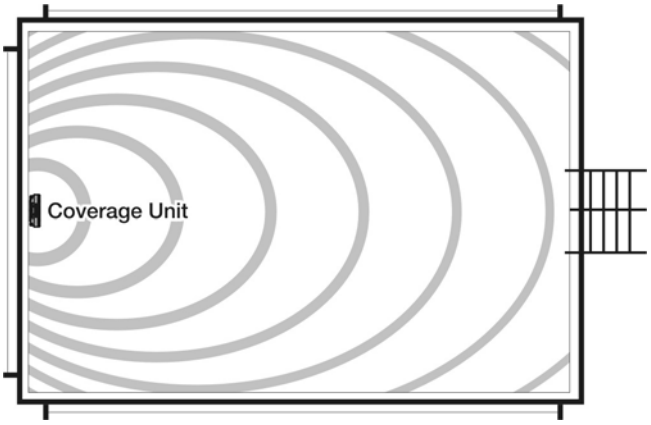

Figure 2.8: Coverage pattern in front of CU

When mounting the CU on a ceiling, the unit should be positioned in the middle of the area to be covered side-to-side, and off-centered front-to-back. Figure 2.9 shows the coverage area when the CU is mounted closer to the center of room or if mounted on a typical interior drywall partition. The back coverage area is reduced further if the partition wall is constructed of a dense material such as concrete or brick.

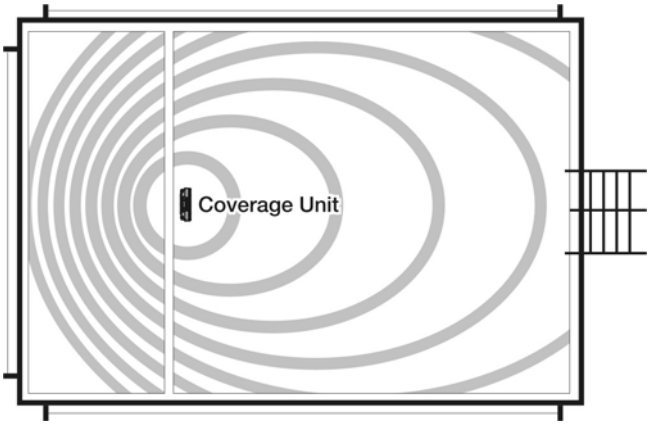

Figure 2.9: Back and front coverage pattern

The unit should be mounted as high on the wall as possible.

Note: The CU has been designed for convection cooling. There is insufficient airflow to guarantee proper operating temperature in all circumstances with the unit mounted horizontally. To avoid an operating temperature problem, the 2500Xe CU should only be mounted vertically. Do not mount the CU horizontally.

2.4.1 Positioning the 2500Xe CU

Before positioning the CU, ensure that the DU position has been optimized and the DU has been mounted in place.

To position the CU

1. Place the CU in the area needing coverage, but do not physically mount at this time.
2. Temporarily connect the cable from the DU to the port labelled ① on the top of the CU.

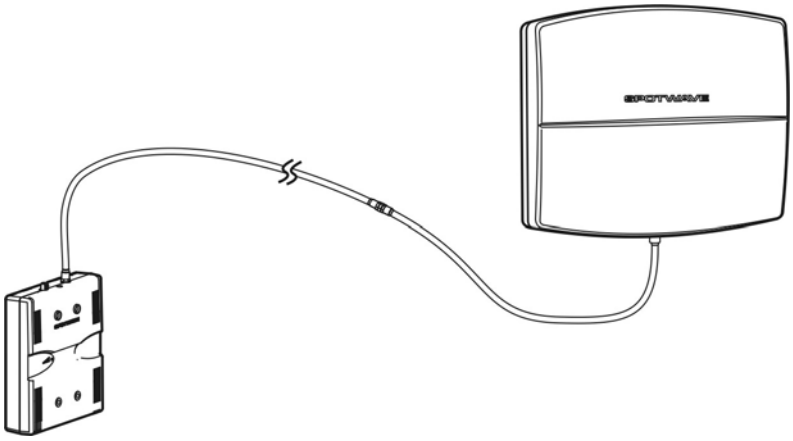

Figure 2.10: Connect CU to DU

3. Connect the power supply to the CU, and then plug the adapter into an AC outlet.

4. Hold the CU in the position it is to be mounted. Ideally the display on the back of the CU will show 5 bars for coverage area.

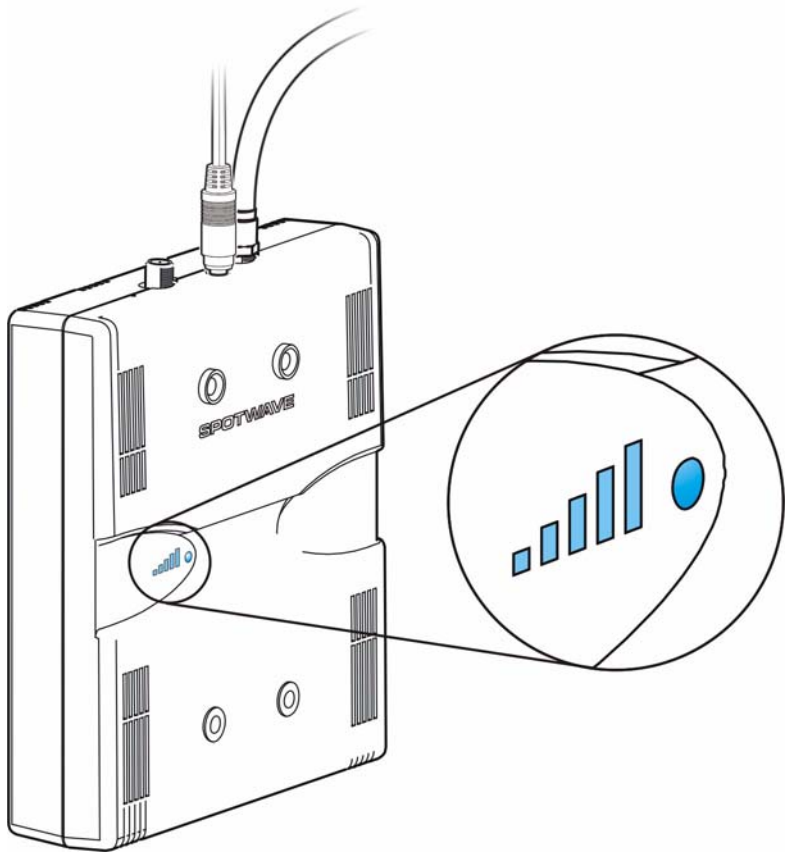

Figure 2.11: Coverage display on CU

If it is not showing 5 bars for coverage area and there are alternate mounting locations, move the CU to the alternate locations and check the display. Place the CU in the location showing maximum number of bars.

See *CU indicators* on page 37 for more information on the CU Coverage Indicator.

If the number of bars is not changing, which is very possible, choose a CU mounting location that is convenient for the area requiring coverage.

5. Once the CU is positioned for optimal coverage, permanently run the copper core coaxial cable from the DU to the CU location. See *Routing the cable* and *Bringing the cable indoors* on page 26.

6. Tighten the cable connection to the CU with a wrench (a 1/4 of a turn tighter than finger tight) to ensure moisture does not penetrate.

7. Refer to *Mounting the CU* on page 29 for mounting instructions.

2.5 Positioning the 2500Xe Auxiliary CU

The Auxiliary CU should be optimized and mounted after the MAIN CU has been optimized and mounted. The guidelines for positioning the Auxiliary CU are the same as those for mounting the MAIN CU.

- mount the Auxiliary CU in a location as far as possible from the DU, while being within the area where you require improved coverage.
- the Auxiliary CU should be positioned in the middle of the coverage area, side-to-side, and off-centered slightly front-to-back, approximately as shown in Figure 2.9.
- the Auxiliary CU should be mounted as high on the wall as possible.

To position the Auxiliary CU

1. Temporarily connect the port labelled ① on the auxiliary CU to the port labelled ② on the main CU.

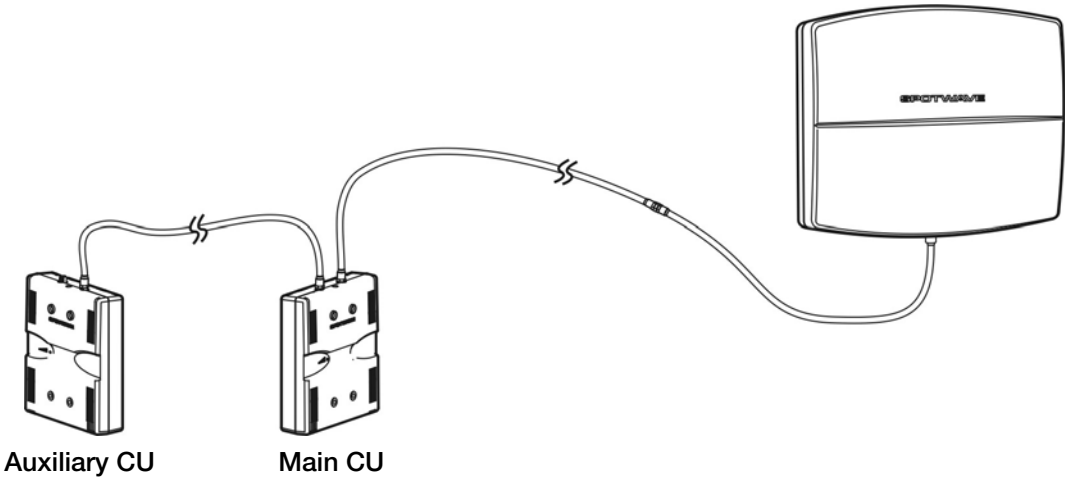

2. Connect the extra power supply to the Auxiliary CU and plug the adapter into an AC outlet.
3. Hold the Auxiliary CU in the position it is to be mounted. In an ideal application, the display on the CU will show 5 bars of coverage area. If the display is not showing 5 bars for coverage area and there are alternate possible mounting locations, move the Auxiliary CU to the alternate locations and check the display.
4. Place the Auxiliary CU in the location showing maximum number of bars. In the event the number of bars is not changing, which is very possible, choose a location that is most convenient.
5. Once the Auxiliary CU is positioned for optimal coverage, permanently run the copper core coaxial cable from the MAIN CU to the Auxiliary CU location.
6. Refer to *Mounting the CU* on page 29 for mounting instructions.

2.6 Positioning the 250Xe/250He CU

The SpotCell 250Xe and 250He CU should be mounted after the DU position has been optimized and the DU has been mounted in place. The guidelines for positioning the 250Xe/He CU are the same as those for mounting the 2500Xe CU.

- mount the CU in a location as far as possible from the DU, while being within the area where you require improved coverage.
- the CU should be positioned in the middle of the coverage area, side-to-side, and off-centered slightly front-to-back, approximately as shown in Figure 2.9.
- the CU should be mounted as high on the wall as possible.

To position the 250Xe/He CU

1. Determine the best location for the CU following the suggested guidelines above.
2. Permanently run the copper core coaxial cable from the DU to the CU location. See *Routing the cable* and *Bringing the cable indoors* on page 26.
3. Connect the power supply to the CU and plug the adapter into an AC outlet.
4. Tighten the cable connection to the CU with a wrench (a 1/4 of a turn tighter than finger tight) to ensure moisture does not penetrate.
5. Refer to *Mounting the CU* on page 29 for mounting instructions.

3 – Mounting the DU and CU

Mount the DU and CU only after the optimal locations for each unit has been determined (see 2.3“Choosing a location for the DU” and 2.4“Choosing a location for the CU”).

3.1 Mounting the DU

The DU may be indoor or outdoor mounted. Based on the direction the DU will point, consider possible mounting locations.

The SpotCell 2500Xe ships with basic hardware for mounting the DU to an inside wall and also includes either a DU Indoor Mounting kit or an Outdoor Mounting kit. The illustrations on the following pages show some of the possible mounting options.

3.1.1 Mounting Options

Overhead Mount

The overhead mount provides left to right rotation, but no up or down-tilt.

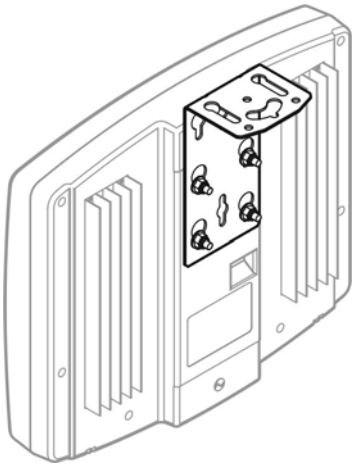

Wall Mount

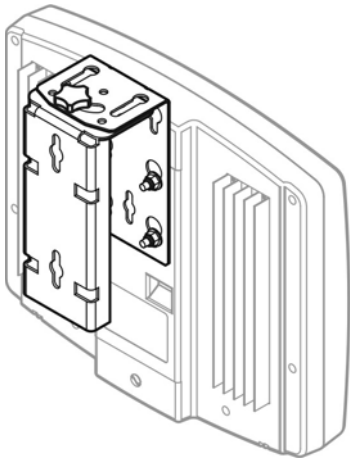

The wall mount configuration allows for some left to right rotation, but no up or down tilt.

The second bracket required for this mounting configuration is provided with the optional Outdoor Mounting kit.

Side Surface Mount (indoor only)

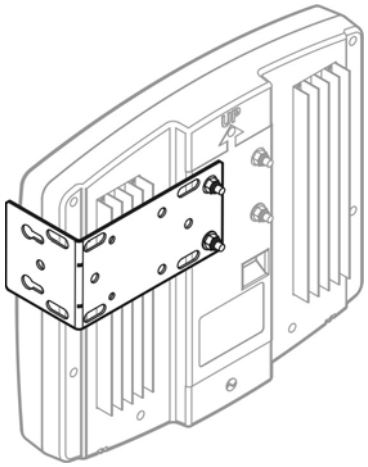

The side surface mount allows for some up and down tilt, but no left to right rotation.

There are two important concerns with this mounting configuration:

1. This configuration cannot withstand strong winds and should only be used indoors.

2. To keep the bracket secure, all four mounting nuts on the back of the DU must be in place and tightened, even if only two of the nuts are holding the bracket to the DU.

Pipe Mount

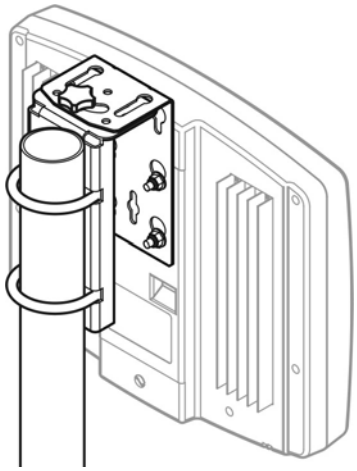

Use U-bolts to mount the unit to a 2-in pipe.

The pipe mount allows for complete left to right rotation with no range of up-tilt or down-tilt.

Extended Vertical Surface Mount

This configuration can be used to mount the DU from an overhead vertical surface (such as a beam or truss) and allows for full rotation either left to right or up and down, depending on how the mount is fastened to the DU.

The second bracket required for this mounting configuration is provided with the optional DU Indoor Installation kit.

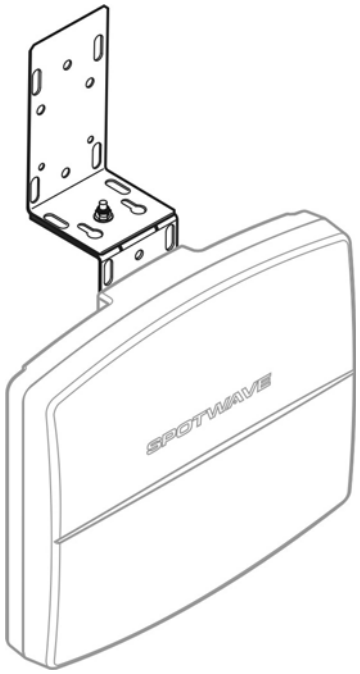

3.1.2 DU Outdoor Mounting

The mounting bracket has holes, keyhole slots, and rounded slots for 1/4-in lag bolts.

Mounting to a wood structure

1. Use the holes in mounting bracket as a template and mark the hole locations.
2. Drill 1/8-in. diameter holes approximately 2.5-in. deep.
3. Install the DU mounting bracket using at least two 1/4-in. lag bolts.
4. Fasten the DU to the mounting bracket.

Mounting to a brick or concrete structure:

1. Use holes in mounting bracket as a template and mark the hole locations.
2. Use a masonry drill bit to drill 5/16-in. diameter holes, 2-in. deep.
3. Insert masonry screw anchors so that the anchor is flush to the mounting surface.
4. Install the DU mounting bracket using at least two 1/4" lag bolts.
5. Fasten the DU to the mounting bracket.

Mounting to a pipe:

1. Fasten the bracket to the DU before mounting to the pipe.
2. Feed the u-bolts (from the Outdoor Install kit) through the rounded rectangular slots as shown in “Use U-bolts to mount the unit to a 2-in pipe.”.
3. Aim the DU at the signal source and tighten the u-bolts.

Note: DO NOT use cable ties to mount the DU.

Routing the cable

When routing the cable on a roof be sure to locate it where it will not be tripped over.

Use tie-wraps to attach the cable to an existing pipe or cable run.

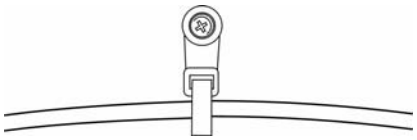

Figure 3.1: Cable Strap

Secure the cable to wood or siding walls using #6 x 1.5-in. wood screws and cable loop straps as shown in Figure 3.1:“Cable Strap”.

To attach the cable to a brick or concrete wall:

1. Drill a 3/16-in. diameter x 1-1/4 in. deep hole using a masonry drill bit.
2. Insert the anchor flush with the mounting surface.
3. Use cable clamps and screws to attach the cable to the wall.

Bringing the cable indoors

If it is necessary to run a cable through a wall, use a masonry or wood drill bit to drill a 3/4-inch diameter hole.

To bring the cable through an exterior wall:

1. Depending on the material the wall is made of use a wood or masonry drill bit to drill a 3/4-in. diameter hole.
2. Pass the connector and cable through the wall.
3. Use the putty/sealant (provided with Outdoor Installation kit) to fill the hole.
4. Fashion a drip loop in the cable if the hole is not next to the ground block.

Grounding the DU

When the DU is installed outside, electrical (or building) code calls for the outer conductor of the coaxial cable to be grounded at or near the point of entrance of the cable into the building. A ground-block is provided with the Outdoor Installation kit.

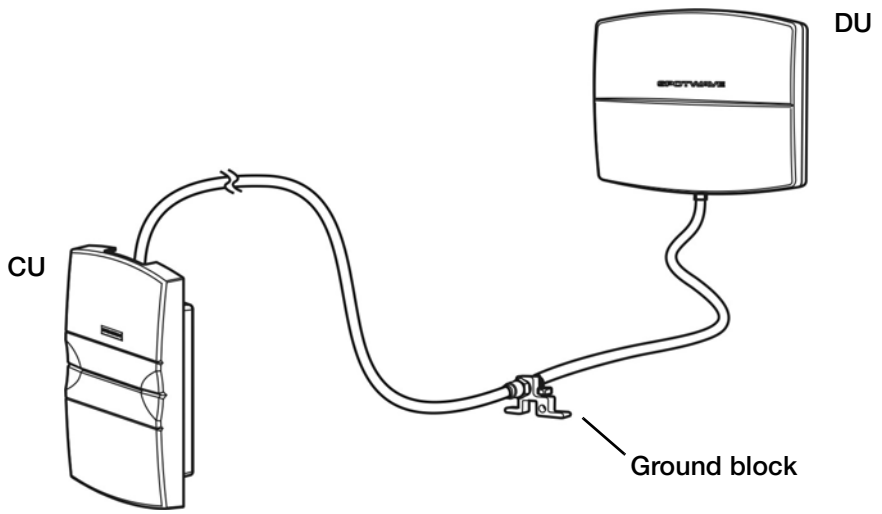

Figure 3.2: Ground coaxial cable with ground block

Drip Loops

While securing the cable outside, ensure that a drip loop is fashioned on both sides of the ground block and fasten a tie wrap around the loop to keep the loop secured.

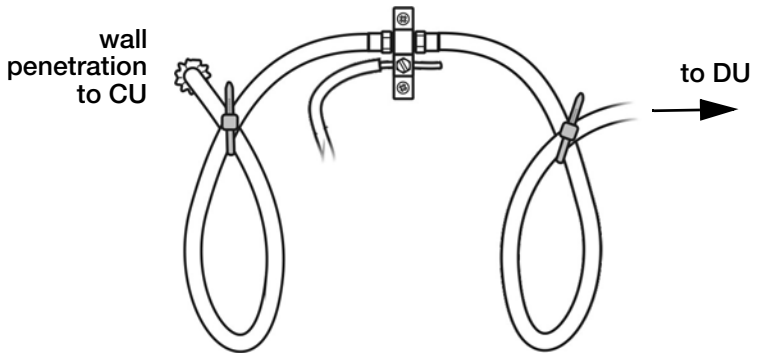

Figure 3.3: Drip loops on both sides of ground block

If where the cable enters the building is **not** next to the ground block, then another drip loop will also have to fashioned at this point. The drip loop prevents water from collecting around the cable where it attaches to the block or where it enters the building.

Ideally the ground block should be bonded to the roof ground network, a metal cold water pipe, structural steel, or metal electrical conduit. Use #10-AWG solid-copper wire (minimum). Green insulation is preferred. Alternatively uninsulated #8-AWG aluminum may be permitted. Be sure to check national and local code requirements.

Connect the ground wire to the cold water pipe or alternative using an appropriate crimp-on ring or lug connector. Ground conductor and termination hardware are not supplied.

Warning! Failure to properly ground the DU will leave the unit and building vulnerable to damage from lightning strikes. Check local building and electrical code requirements and comply with both local and national regulations.

Ideally the DU ground wire should be bonded to the roof ground network. For roofs without such a network use a metal cold water pipe, structural steel, or metal conduit.

3.1.3 DU indoor mounting

To mount the DU indoors:

1. Use the mounting bracket as a template and mark the hole locations.
2. If the mounting is in a solid wood surface, or a stud covered by drywall, drill a 5/32 inch diameter hole. Mount the unit with 2 inch wood screws.

   or

   If the mounting is in drywall, drill a ¼ diameter hole and insert an anchor. Mount the unit with 1/2 inch pan head screws.
3. Attach cables to the wall using tie wraps and mount directly to the wall where possible (using 1/2 inch pan head screws). If an anchor is required drill a 3/16 inch diameter hole, insert the anchor, and fasten with 1/2 inch pan head screws.

3.2 Mounting the CU

Find a suitable location to mount the unit that will provide good signal coverage. Refer to section 2.4“Choosing a location for the CU”. The SpotCell 2500Xe CU is surface mounted using the provided bracket and can be either mounted to a wall or hung from a ceiling.

To mount the CU

1. Fasten the mounting bracket to the wall or ceiling.

   If **mounting on a solid wood surface, or stud covered by drywall**, drill a 1/8th inch diameter hole and then fasten the mounting bracket with #6 x 1.5” screws.

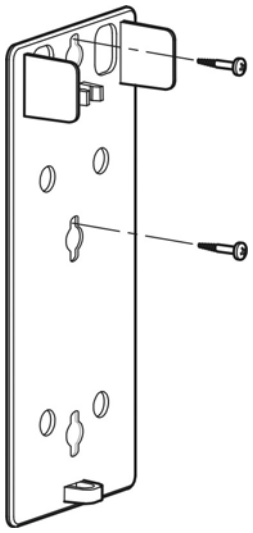

Figure 3.4: CU bracket fastened with screws

or

If **mounting to drywall**, drill a ¼ inch diameter hole, insert the screw anchors, and then fasten the mounting bracket with 1/2” screws.

or

If **mounting to a ceiling or t-bar**, use the bracket and clips that are supplied with the optional SpotCell Ceiling Mount Install kit.

2. Position the bottom of the CU into the hole at the bottom of the mounting bracket and push the top of the CU onto the bracket. You should feel the CU snap securely into place.

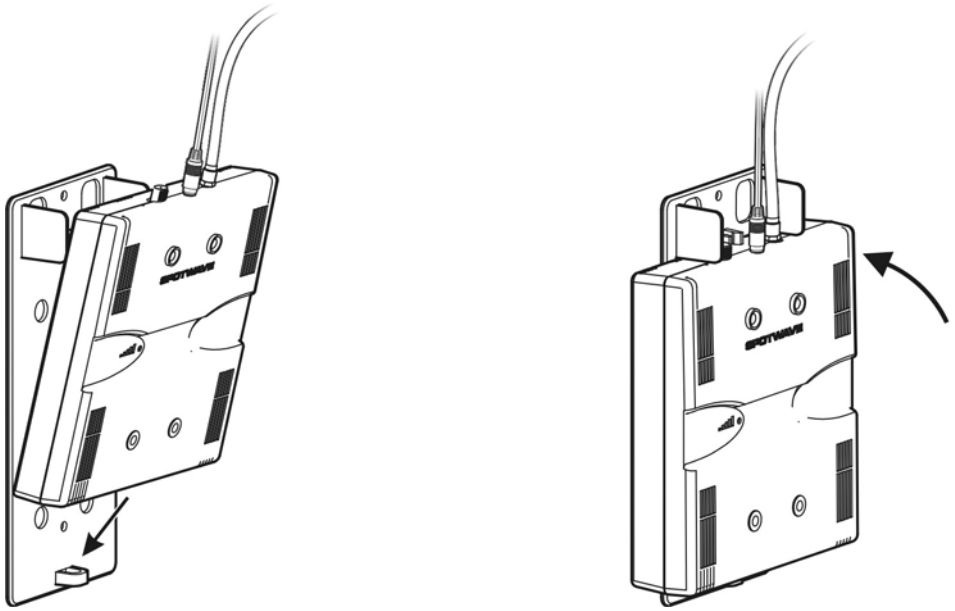

Figure 3.5: Inserting the CU into the bracket

3. Position the CU cover such that the four pins align with the holes on the CU and push the cover securely into place.

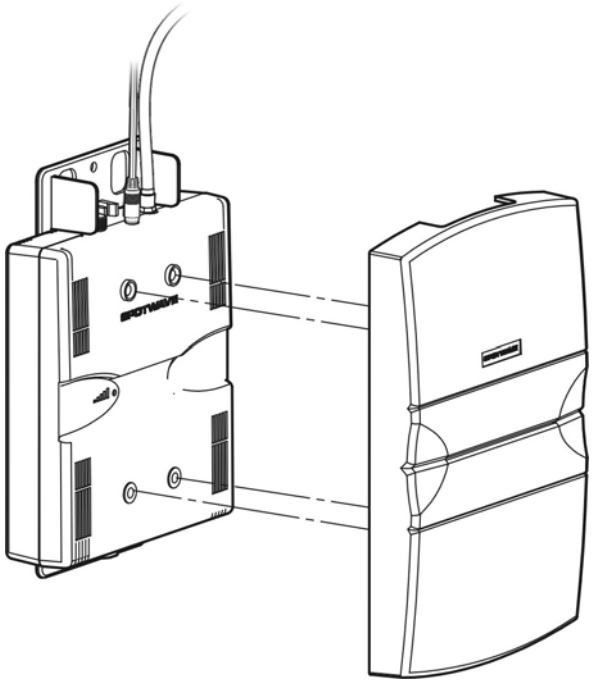

Figure 3.6: Position CU cover over CU

Figure 3.7: CU mounted with cover

4. Secure the cables to the wall using tie wraps and mount directly to the wall where possible (using 1/2 inch pan head screws). If an anchor is required drill a 3/16 inch diameter hole, insert the anchor, and fasten with 1/2 inch screws.

3.3 Using the Hidden Cable kit

The Hidden Cable kit includes a BIAS-T (power inserter) and two F-90 connectors that make it easier to hide the power and RF cables that are normally connected directly to the CU.

3.3.1 BIAS-T (power inserter)

The BIAS-T (power inserter) is used to power the system from a discreet or more conveniently located AC outlet.

To install the BIAS-T

1. Choose an indoor location along the coaxial cable run to install the BIAS-T. The BIAS-T location must be within 20 feet (6 meters) of an AC outlet so that the power adapter cord can reach.

2. If the AC adapter can reach the end of the 10 ft (3m) cable attached to the DU then simply attach the BIAS-T to the DU cable and then the cable coming from the CU.

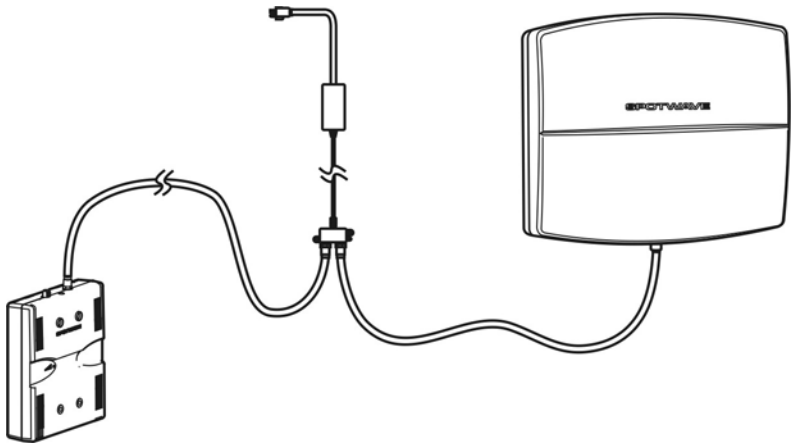

Figure 3.8: BIAS-T inserted near DU

or

If the DU is too far from the AC outlet, cut the coaxial cable at the chosen location, properly terminate both ends with Spotwave approved connectors, and attach the the BIAS to the two new connectors.

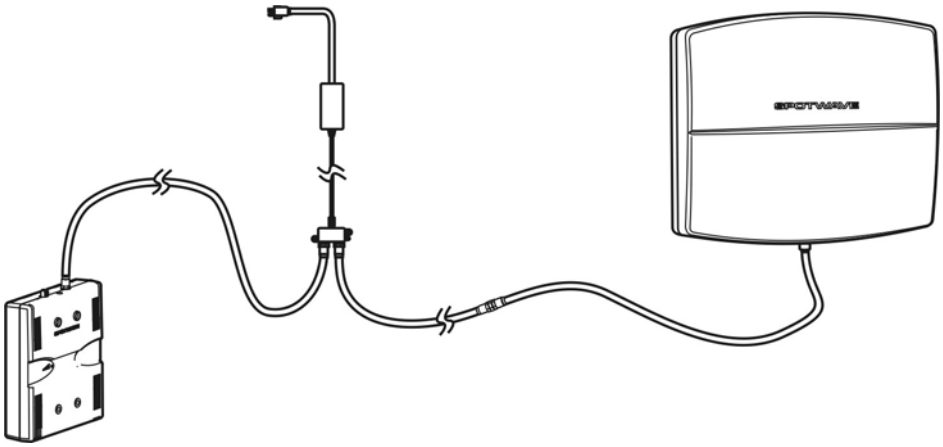

Figure 3.9: BIAS-T inserted far from DU

3. Connect the power supply to the BIAS-T and then plug the adapter into an AC outlet.

3.3.2 F-90 connectors

The 90 degree F connectors included in the kit, allow the coaxial cables to be run through the CU mounting bracket and directly into the wall opening. Figure 3.10:“F-90 connector used to hide coaxial cable” shows how the cable runs from the cut-in ring in the wall, through the mounting bracket and connects to the F-90 connector on the CU.

The second F-90 connector is included in the kit for systems that use an auxialliary CU.

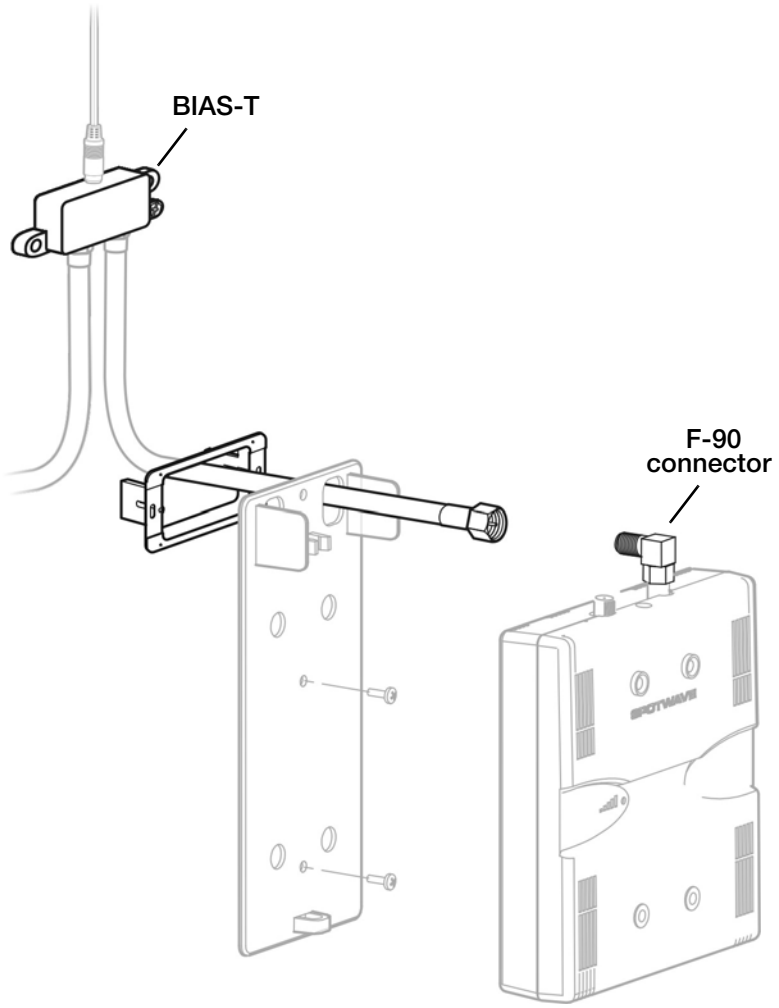

Figure 3.10: F-90 connector used to hide coaxial cable

With the CU cover in place, the connector and cable are hidden from view.

3.4 CU Ceiling Mount kit

The CU Ceiling Mount kit is used to hang the CU directly from a ceiling. This kit replaces the standard CU mounting bracket with metal bracket that attaches to the bacl of the CU and fastens either directly to the ceiling or to the supplied t-bar hanger.

The kit includes:

1. Back cover
2. Ceiling bracket
3. Twist fastener (t-bar hanger)

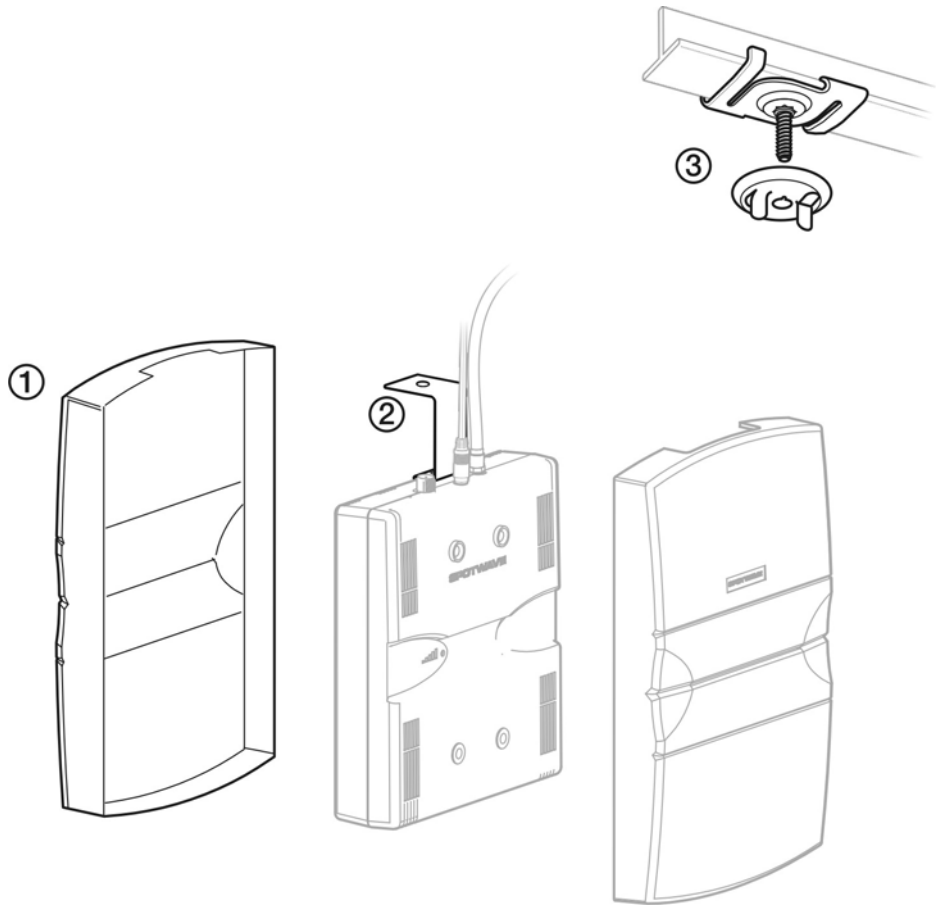

Figure 3.11: CU Ceiling Mount kit

4 – Trouble-Shooting

1. **Status**: The LED on the back of the DU and CU display information regarding the SpotCell system during operation.

   Action: A red LED indicates a fault condition, a yellow LED indicates an overdrive condition, and blue indicates power on, no faults. A green LED on the CU indicates reduced coverage due to a signal isolation condition.

2. **Status**: The LED on the DU is not illuminating.

   Action: Ensure the following:

   - The cable from the DU is connected to the CU port labelled ①.
   - The power supply is connected to the CU or BIAS-T (power inserter).
   - The power supply is plugged into an electrical outlet.
   - If the LED is still not illuminating, contact technical support.

3. **Status**: My cell phone does not work around the location I would like to install the SpotCell DU.

   Action: Try positioning the DU externally as high as possible.

4. **Status**: The DU and CU are installed properly, but your cell phone only works in close proximity to the CU.

   Action: There are three factors that may be affecting coverage as described below:

   - Visually inspect the area around the CU. Ensure that there are not any large metallic objects directly between the CU and the area where cell phone coverage is not adequate. Remount the CU so that it is out in the open.
   - If the signal the DU is receiving is very weak (although still strong enough to allow operation), the area around the CU within which a cell phone can function will be relatively small. An effort can be made to improve system performance by raising or otherwise repositioning the DU in an effort to obtain a stronger signal.
   - check with your vendor that your SpotCell product is compatible with your cell phone service.

5. **Status**: The coverage area around the CU suddenly shrinks after a long period of reliable operation.

   Action: This is most likely due to man made environmental influences such as a large building being erected somewhere in between the DU and the location the DU is receiving a signal from. Repeating the install procedure with the DU in its current position may improve system performance (i.e. re-aligning it in the direction that provides greater signal strength). If this does not help, the DU may have to be physically repositioned at a different location; going through the install procedure starting at *Choosing a location for the DU* on page 13, is necessary at this point.

6. Information: **Remote installation SpotCell characteristics**.

   In order for the SpotCell system to function, there are two basic parameters that must be met. The DU must receive a minimum amount of wireless signal, and a physical environment that blocks wireless signals must be in between the DU and CU (i.e. a wall).

   If the DU is not receiving an adequate signal, the system will not work, or, it will work but provide a very limited area around the CU in which a cell phone will function. In this instance, it may be possible that only one cell phone will be capable of using the system at a time. This is typical of applications that are on the fringe, or outside of a wireless providers advertised coverage area. Improved performance will typically only be attained by moving the DU to a higher location.

7. Information: **Building installations that do not provide for brick, concrete, metal, or other dense material between the DU and CU**.

   Action: In this situation it is possible that the signal emitted by the DU will be received by the CU. This will result in the system lowering the power of the signal it is emitting; and therefore the area around the CU in which a cell phone will function will become smaller. To improve performance in this scenario, it is important to:

   - Maximize the height of the DU
   - Separate the DU and CU horizontally as much as possible (within the maximum cable limits as shown in Table 1, *Maximum cable length for connecting units* on page 10).
   - Mount the DU and CU in a back-to-back manner.

Appendix A – 2500Xe System Specifications

Note: Spotwave Wireless has the right to change specifications without notice.

A.1 CU indicators

The SpotCell 2500Xe CU has two indicators on the front, a mult-color LED for status and a 5 bar indicator for coverage.

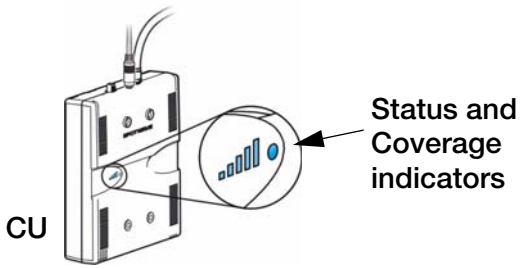

CU Status LED

The status of the SpotCell system is indicated by the single multi-color LED located on the front of the CU. The meaning of each status LED color is listed below.

Color	Status
Off	No power.
Blue	Power on, no faults.
Yellow	Overdrive condition (either adjacent or in-band, not discriminated).
Green	Reduced coverage due to signal isolation condition.
Red	Fault condition (could indicate a system fault, upgrade failure, or expired activation period).

CU Coverage bars

The graduated blue bars on the CU indicate the level of coverage which is determined by the CAS back-off (isolation required to generate optimum output power at the CU).

	0 bars indicate either a >20dB back-off or that the power is off. System will not operate.
	1 bar indicates a back-off between 17 and 20dB. Very small coverage area. Operation may be intermittent.
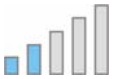	2 bars indicate a back-off between 13 and 16dB. Small coverage area that is likely to vary in size.
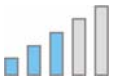	3 bars indicate a back-off between 9 and 12dB. Reduced coverage area that may vary in size.
	4 bars indicate a back-off between 5 and 8dB. Good coverage area that will remain stable.
	5 bars indicates 0 to 4 dB back-off (coverage maximized at 0 dB). Optimum and stable coverage area.

A.2 DU signal level indicators:

The SpotCell 2500Xe DU has two indicators on the back, a mult-color LED for status and a 5 bar indicator for received signal level.

Note: Both indicators automatically shut off after the system has been powered for 20 minutes. To re-activate the display, either cycle the system power off/on or disconnect and then re-connect the DU's coaxial cable.

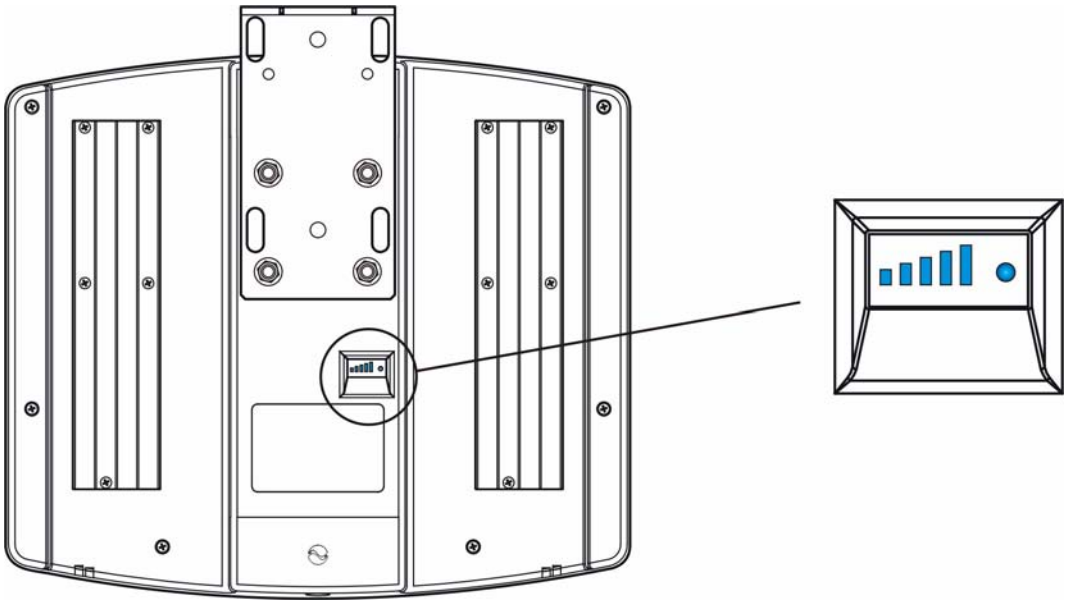

DU Status LED

The status of the SpotCell system is indicated by the single multi-color LED located on the back of the DU. The meaning of each status LED color is listed below.

Color	Status
Off	No power.
Blue	Power on, no faults.
Yellow	Overdrive condition (either adjacent or in-band, not discriminated).
Red	Fault condition (could indicate a system fault, upgrade failure, or expired activation period).

DU Signal Level Indicator

The graduated blue bars on the back of the DU indicate the signal level received by the DU

	0 bars indicate the received signal is too low (**less than -95 dBm**) or that the power is off.
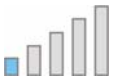	1 bar indicates the received signal level from the base station is very low (**-85 to -95 dBm**). Operation may be intermittent.
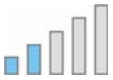	2 bars indicate the received signal is just within operational range (**between -85 and -75 dBm**).
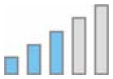	3 bars indicate the received signal is **between -75 and -65 dBm**.
	4 bars indicate the received signal is **between -65 and -55 dBm**.
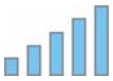	5 bars indicate the received signal is at the highest level (**greater or equal to -55 dBm**).

A.3 Antenna Specifications:

	Cell		PCS	
	DU Antenna	CU Antenna	DU Antenna	CU Antenna
Gain (dBi)	9 dBi	0 dBi	12 dBi	+1 dBi
Elevation Beamwidth - typical (dg)	60°	90°	45°	NA
Azimuth Beamwidth - typical (dg)	45°	NA	22°	NA
Front-to-Back Ratio (dB)	>20 dB	0 dB	>20 dB	0 dB
Polarization	Vertical			

A.4 Architecture (Dual Band 850/1900 Coverage System)

Frequency Bands	PCS Uplink: 1850-1910 MHz Downlink: 1930-1990 MHz
	Cell Uplink: 824-849 MHz Downlink: 869-884 MHz
Sub-Bands	Operator sub-bands: Operator Specific Primary sub-band: Cell (A+A'+A'' or B+B') PCS (5, 10, 15 MHz) Secondary PCS (split-band) options: 5 or 15 MHz
Formats Supported	GSM / GPRS / EDGE / UMTS and IS-95 / CDMA / 1XRTT / 1XEVDO
Typical Coverage Area	25,000 sq. ft (2,300 m2)
Open Coverage Area	50,000 sq. ft (4,600 m2)
System Gain (fully adaptive, includes antenna)	Uplink: 0 to +85 dB maximum Downlink: 0 to +85 dB maximum
System Stability Margin	> 10 dB (fully adaptive)
Downlink Operating Range	-95 to - 45 dBm (receive isotropic power)
Maximum Input Level (receive isotropic power)	Uplink: -10 dBm Downlink: -45 dBm
Output Level -EIRP (fully adaptive)	Uplink: +30 dBm EIRP maximum (fully adaptive) Downlink: 0 dBm per carrier, maximum +10 dBm composite
Third Order Intercept (EIRP, radiated)	PCS Uplink: +50 dBm Downlink: +27 dBm
	Cell Uplink: +53 dBm Downlink: +27 dBm
Power Consumption	< 45 W

A.4.1 Physical

	DONOR UNIT	COVERAGE UNIT
Operating Temperature	-40° to 130 F° (-40° to +55° C)	32° to +104° F (0° to +40° C)
Size	14 x 12.5 x 3 in. (36 x 31.5 x 8 cm)	6 x 9.25 x 1.75 in. (15.5 x 23.5 x 4.75 cm)
Weight	12 lb. (5.5 kg)	2 lb. (1 kg)
RF Connectors	Type F: Coverage Port (weatherproof)	Type F: Donor Port Type F: Extension Antenna Port
RF Cable	Coverage specification is met with up to 25m RG-6 cable between Donor & Coverage Units	
Optional RF Cable	Plenum rated or RG-11 also available	
Power Supply	Universal power adapter (90 - 260 VAC, 47 -63 Hz)	

A.4.2 BW Measurements

Cell Band A bandwidth measurement at 20dB down	Uplink = 22.4MHz
	Downlink = 23.36MHz
Cell Band B bandwidth measurement at 20dB down	Uplink = 14.70MHz
	Downlink = 14.40MHz
PCS 15MHz bandwidth measurement at 20dB down	Uplink = 16.16MHz
	Downlink = 16.24MHz

A.4.3 Installation

Installation Time	Less than one hour typical
Donor (outward facing) Unit Alignment	No prior knowledge of base station location required. Built in alignment algorithm (LED Indicator on Donor Unit).
Test Equipment	None required. No RF knowledge required for installation. Easy-to-read LED indicators guide installation
User Controls	None, setup and operation is fully automatic.

A.4.4 Diagnostics

User Interface	Built-in LED coverage area display on Coverage Unit Built-in signal strength display on Donor Unit

A.4.5 Coverage Extension

Coverage Area	Second Coverage Unit provides an additional 25,000 sq. ft (2,300 m2) coverage when connected to the primary Coverage Unit with up to 164 ft (50m) of RG-6 cable or 328 ft (100m) of RG-11 cable.

Appendix B – 250Xe System Specifications

Note: Spotwave Wireless has the right to change specifications without notice.

B.1 CU indicators

The SpotCell 250Xe CU has one power LED indicator on the front.

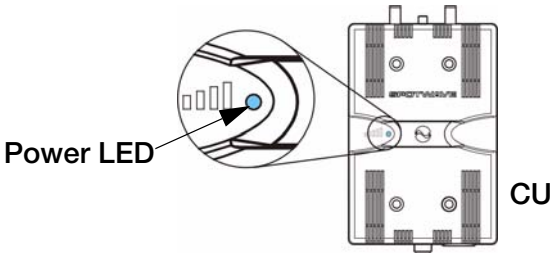

CU Power LED

The power of the SpotCell system is indicated by the single blue LED located on the front of the CU.

Color	Status
Off	No power.
Blue	Power on, no faults.

B.2 DU signal level indicators:

The SpotCell 250Xe DU has two indicators on the back, a mult-color LED for status and a 5 bar indicator for received signal level.

Note: Both indicators automatically shut off after the system has been powered for 20 minutes. To re-activate the display, either cycle the system power off/on or disconnect and then re-connect the DU's coaxial cable.

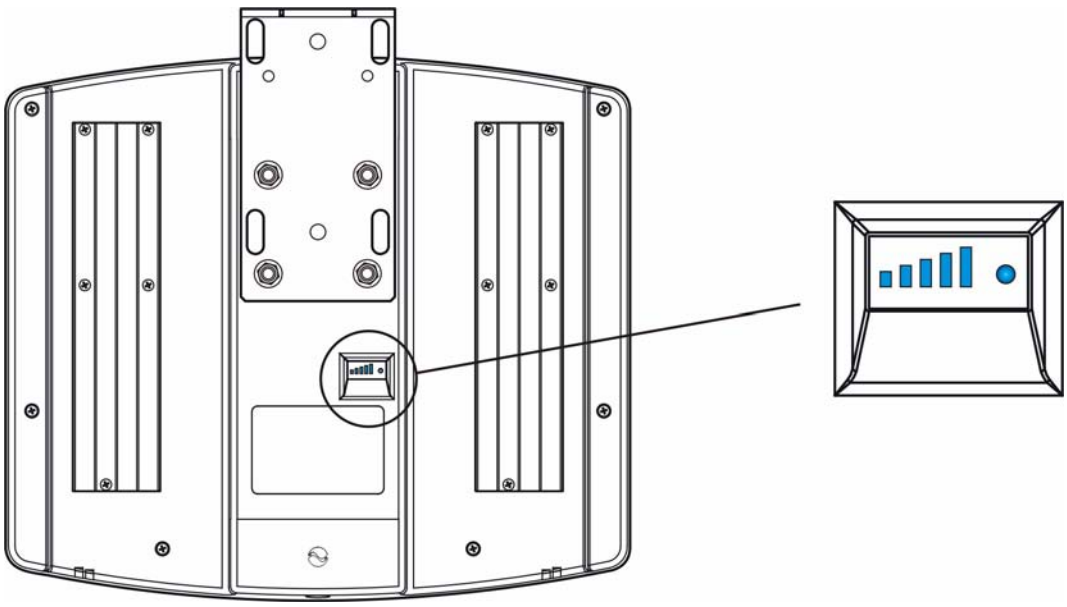

DU Status LED

The status of the SpotCell system is indicated by the single multi-color LED located on the back of the DU. The meaning of each status LED color is listed below.

Color	Status
Off	No power.
Blue	Power on, no faults.
Yellow	Overdrive condition (either adjacent or in-band, not discriminated).
Red	Fault condition (could indicate a system fault, upgrade failure, or expired activation period).

DU Signal Level Indicator

The graduated blue bars on the back of the DU indicate the signal level received by the DU

	0 bars indicate the received signal is too low (**less than -95 dBm**) or that the power is off.
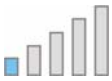	1 bar indicates the received signal level from the base station is very low (**-85 to -95 dBm**). Operation may be intermittent.
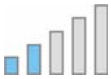	2 bars indicate the received signal is just within operational range (**between -85 and -75 dBm**).
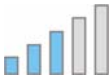	3 bars indicate the received signal is **between -75 and -65 dBm**.
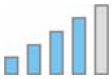	4 bars indicate the received signal is **between -65 and -55 dBm**.
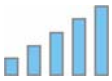	5 bars indicate the received signal is at the highest level (**greater or equal to -55 dBm**).

B.3 Antenna Specifications:

	Cell		PCS	
	DU Antenna	CU Antenna	DU Antenna	CU Antenna
Gain (dBi)	9 dBi	0 dBi	12 dBi	+1 dBi
Elevation Beamwidth - typical (dg)	60°	90°	45°	NA
Azimuth Beamwidth - typical (dg)	45°	NA	22°	NA
Front-to-Back Ratio (dB)	>20 dB	0 dB	>20 dB	0 dB
Polarization	Vertical			

B.4 Architecture (Dual Band 850/1900 Coverage System)

Frequency Bands	PCS Uplink: 1850-1910 MHz Downlink: 1930-1990 MHz
	Cell Uplink: 824-849 MHz Downlink: 869-884 MHz
Sub-Bands	Operator sub-bands: Operator Specific Primary sub-band: Cell (A+A'+A'' or B+B') PCS (5, 10, 15 MHz) Secondary PCS (split-band) options: 5 or 15 MHz
Formats Supported	GSM / GPRS / EDGE / UMTS and IS-95 / CDMA / 1XRTT / 1XEVDO
Typical Coverage Area	2,500 sq. ft (230 m2)
System Gain (fully adaptive, includes antenna)	Uplink: 0 to +85 dB maximum Downlink: 0 to +85 dB maximum
System Stability Margin	> 10 dB (fully adaptive)
Downlink Operating Range	-95 to - 45 dBm (receive isotropic power)
Maximum Input Level (receive isotropic power)	Uplink: -10 dBm Downlink: -45 dBm
Output Level -EIRP (fully adaptive)	Uplink: +30 dBm EIRP maximum (fully adaptive) Downlink: 0 dBm per carrier, maximum +10 dBm composite
Third Order Intercept (EIRP, radiated)	PCS Uplink: +50 dBm Downlink: +27 dBm
	Cell Uplink: +53 dBm Downlink: +27 dBm
Power Consumption	< 45 W

B.4.1 Physical

	DONOR UNIT	COVERAGE UNIT
Operating Temperature	-40° to 130 F° (-40° to +55° C)	32° to +104° F (0° to +40° C)
Size	14 x 12.5 x 3 in. (36 x 31.5 x 8 cm)	4 x 9. x 2 in. (10 x 23 x 5 cm)
Weight	12 lb. (5.5 kg)	< 2 lb. (1 kg)
RF Connectors	Type F: Coverage Port (weatherproof)	Type F: Donor Port Type F: Extension Antenna Port
RF Cable	Coverage specification is met with up to 25m RG-6 cable between Donor & Coverage Units	
Optional RF Cable	Plenum rated or RG-11 also available	
Power Supply	Universal power adapter (90 - 260 VAC, 47 -63 Hz)	

B.4.2 BW Measurements

Cell Band A bandwidth measurement at 20dB down	Uplink = 22.4MHz
	Downlink = 23.36MHz
Cell Band B bandwidth measurement at 20dB down	Uplink = 14.70MHz
	Downlink = 14.40MHz
PCS 15MHz bandwidth measurement at 20dB down	Uplink = 16.16MHz
	Downlink = 16.24MHz

B.4.3 Installation

Installation Time	Less than one hour typical
Donor (outward facing) Unit Alignment	No prior knowledge of base station location required. Built in alignment algorithm (LED Indicator on Donor Unit).
Test Equipment	None required. No RF knowledge required for installation. Easy-to-read LED indicators guide installation
User Controls	None, setup and operation is fully automatic.

B.4.4 Diagnostics

User Interface	Built-in power LED on Coverage Unit Built-in signal strength display on Donor Unit

Appendix C – 250He System Specifications

Note: Spotwave Wireless has the right to change specifications without notice.

C.1 CU indicators

The SpotCell 250He CU has one LED power indicator on the front.

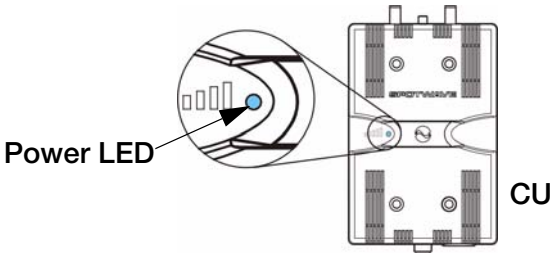

CU Power LED

The power of the SpotCell system is indicated by the single blue LED located on the front of the CU.

Color	Status
Off	No power.
Blue	Power on, no faults.

C.2 DU signal level indicators:

The SpotCell 250He DU has two indicators on the back, a mult-color LED for status and a 5 bar indicator for received signal level.

Note: Both indicators automatically shut off after the system has been powered for 20 minutes. To re-activate the display, either cycle the system power off/on or disconnect and then re-connect the DU's coaxial cable.

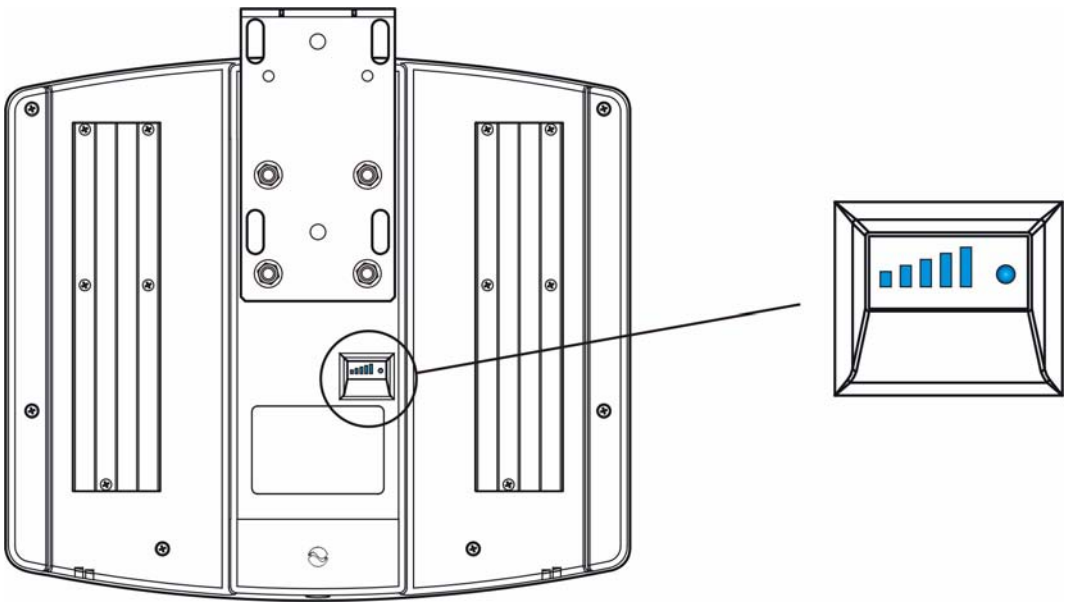

DU Status LED

The status of the SpotCell system is indicated by the single multi-color LED located on the back of the DU. The meaning of each status LED color is listed below.

Color	Status
Off	No power.
Blue	Power on, no faults.
Yellow	Overdrive condition (either adjacent or in-band, not discriminated).
Red	Fault condition (could indicate a system fault, upgrade failure, or expired activation period).

DU Signal Level Indicator

The graduated blue bars on the back of the DU indicate the signal level received by the DU

	0 bars indicate the received signal is too low (**less than -95 dBm**) or that the power is off.
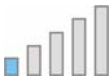	1 bar indicates the received signal level from the base station is very low (**-85 to -95 dBm**). Operation may be intermittent.
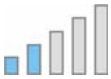	2 bars indicate the received signal is just within operational range (**between -85 and -75 dBm**).
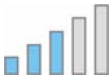	3 bars indicate the received signal is **between -75 and -65 dBm**.
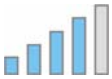	4 bars indicate the received signal is **between -65 and -55 dBm**.
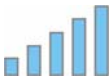	5 bars indicate the received signal is at the highest level (**greater or equal to -55 dBm**).

C.3 Antenna Specifications:

	Cell		PCS	
	DU Antenna	CU Antenna	DU Antenna	CU Antenna
Gain (dBi)	9 dBi	0 dBi	12 dBi	+1 dBi
Elevation Beamwidth - typical (dg)	60°	90°	45°	NA
Azimuth Beamwidth - typical (dg)	45°	NA	22°	NA
Front-to-Back Ratio (dB)	>20 dB	0 dB	>20 dB	0 dB
Polarization	Vertical			

C.4 Architecture (Dual Band 850/1900 Coverage System)

Frequency Bands	PCS Uplink: 1850-1910 MHz Downlink: 1930-1990 MHz
Sub-Bands	Operator sub-bands: Operator Specific Primary sub-band: PCS (5, 10, 15 MHz) Secondary PCS (split-band) options: 5 or 15 MHz
Formats Supported	GSM / GPRS / EDGE / UMTS and IS-95 / CDMA / 1XRTT / 1XEVDO
Typical Coverage Area	2,500 sq. ft (230 m2)
System Gain (fully adaptive, includes antenna)	Uplink: 0 to +85 dB maximum Downlink: 0 to +85 dB maximum
System Stability Margin	> 10 dB (fully adaptive)
Downlink Operating Range	-95 to - 45 dBm (receive isotropic power)
Maximum Input Level (receive isotropic power)	Uplink: -10 dBm Downlink: -45 dBm
Output Level -EIRP (fully adaptive)	Uplink: +30 dBm EIRP maximum (fully adaptive) Downlink: 0 dBm per carrier, maximum +10 dBm composite
Third Order Intercept (EIRP, radiated)	PCS Uplink: +50 dBm Downlink: +27 dBm
Power Consumption	< 45 W

C.4.1 Physical

	DONOR UNIT	COVERAGE UNIT
Operating Temperature	-40° to 130 F° (-40° to +55° C)	32° to +104° F (0° to +40° C)
Size	14 x 12.5 x 3 in. (36 x 31.5 x 8 cm)	4 x 9. x 2 in. (10 x 23 x 5 cm)
Weight	12 lb. (5.5 kg)	< 2 lb. (1 kg)
RF Connectors	Type F: Coverage Port (weatherproof)	Type F: Donor Port
RF Cable	Coverage specification is met with up to 25m RG-6 cable between Donor & Coverage Units	
Optional RF Cable	Plenum rated or RG-11 also available	
Power Supply	Universal power adapter (90 - 260 VAC, 47 -63 Hz)	

C.4.2 BW Measurements

PCS 15MHz bandwidth measurement at 20dB down	Uplink = 16.16MHz
	Downlink = 16.24MHz

C.4.3 Installation

Installation Time	Less than one hour typical
Donor (outward facing) Unit Alignment	No prior knowledge of base station location required. Built in alignment algorithm (LED Indicator on Donor Unit).
Test Equipment	None required. No RF knowledge required for installation. Easy-to-read LED indicators guide installation
User Controls	None, setup and operation is fully automatic.

C.4.4 Diagnostics

User Interface	Built-in power LED on Coverage Unit Built-in signal strength display on Donor Unit

FCC Declaration of Conformity

This equipment complies with CFR 47, Part 15.19 of the FCC rules. Operation of the equipment is subject to the following conditions:

- This device may not cause harmful interference; and
- This device must accept any interference received, including interference that may cause undesired operation.

Information to the User for Class B Digital Equipment

This equipment has been tested and found to comply with limits for a Class B digital device, pursuant to part 15 of the FCC rules. These limits are designed to provide reasonable protection against harmful interference in a residential installation. This equipment generates, uses and can radiate radio frequency energy and, if not installed and used in accordance with the instructions, may cause harmful interference to radio communications. However, there is no guarantee that interference will not occur in a particular installation.

If this equipment does cause interference to radio or television reception, which can be determined by turning the equipment off and on, the user is encouraged to try to correct the interference by one or more of the following measures:

- Reorient or relocate the receiving antenna;
- Increase the separation between the equipment and receiver;
- Connect the equipment into an outlet on a circuit different from that to which the receiver is connected;
- Consult the dealer or an experienced radio/TV technician for help.

FCC Regulatory Compliance

This equipment has been tested and complies with the following FCC requirements:

- FCC Part 22, subpart H: Cellular Radiotelephone Services.
- FCC Part 24, subpart E: Broadband PCS.
- FCC Part 15, subpart C - Intentional radiators.

Industry Canada Compliance

This equipment has been tested and complies with the following requirements:

- RSS - 131 - Zone Enhancers for Land Mobile Service.
- ICES-003, Issue 4 - Interference Causing Equipment Standard - Digital Apparatus

Health and Authorization for Use

SpotCell 2500Xe, SpotCell 250Xe, and SpotCell 250He emit radio frequency electromagnetic energy to enhance signals received by mobile devices for in-building coverage. However, the energy level of these emissions is by far much less than the electromagnetic energy emitted by other wireless devices.

Caution! To maintain compliance with the FCC's RF exposure guidelines, this equipment shall be installed and operated with a minimum distance of 20cm between the radiator and your body. Unauthorized modification of any hardware and attachment may violate FCC regulations.

Warning! The use of shielded-type power cord is required in order to meet FCC emission limits and to prevent interference to nearby radio or television reception. It is essential that only the supplied power cord be used. You are cautioned that changes or modifications not expressly approved by the party responsible for compliance could void your authority to operate the equipment.

Maximum Permissible Exposure Statement

The SpotCell 2500Xe, SpotCell 250Xe, and SpotCell 250He are low power repeaters for in-door coverage. The electromagnetic radiation emitted is much less than what is specified by FCC. The products have been evaluated under the FCC Bulletin Office of Engineering Technology 65c - Evaluating Compliance with FCC Guidelines for Human Exposure to Radio Frequency Electromagnetic Fields. This equipment is complaint to the requirements as set forth in the Code of Federal Regulation 47, section 2.1091 (Radio frequency radiation exposure evaluation), section 1.1310 (Radio frequency Radiation Exposure Limits). **Nevertheless, this equipment shall be installed and operated with a minimum distance of 20cm between the radiator and your body.** Use of this equipment in a body-worn manner is strictly prohibited.

Safety Code 6 - Industry Canada Requirement

This equipment has been evaluated for radio frequency Radiation limits in accordance with the Safety Code 6 - Limits of Human Exposure to Radio frequency Electromagnetic Fields in the Frequency Range from 3KHz to 300GHz. The equipment is complaint to the safety code 6 requirements for the radiation limits as specified in sections 2.1 and sections 2.2.

Safety Information

The CSA mark indicates that this Equipment meets the CAN/CSA C22.2 N° 60950-00 and ANSI/UL Std N° 60950-00 - Safety of Information Technology Equipment.

www.spotwave.com

Spotwave Wireless Inc. 1 Hines Road, Ottawa ON K2K 3C7 Canada

© 2005 Spotwave Wireless Inc. All rights reserved. Printed in Canada
Spotwave and SpotCell are trademarks of Spotwave Wireless Inc. Patents pending.