# Proximity Card Reader SmartID

**Ref. V6-083106**

INTEGRATED ENGINEERING

*Smart Technology!*

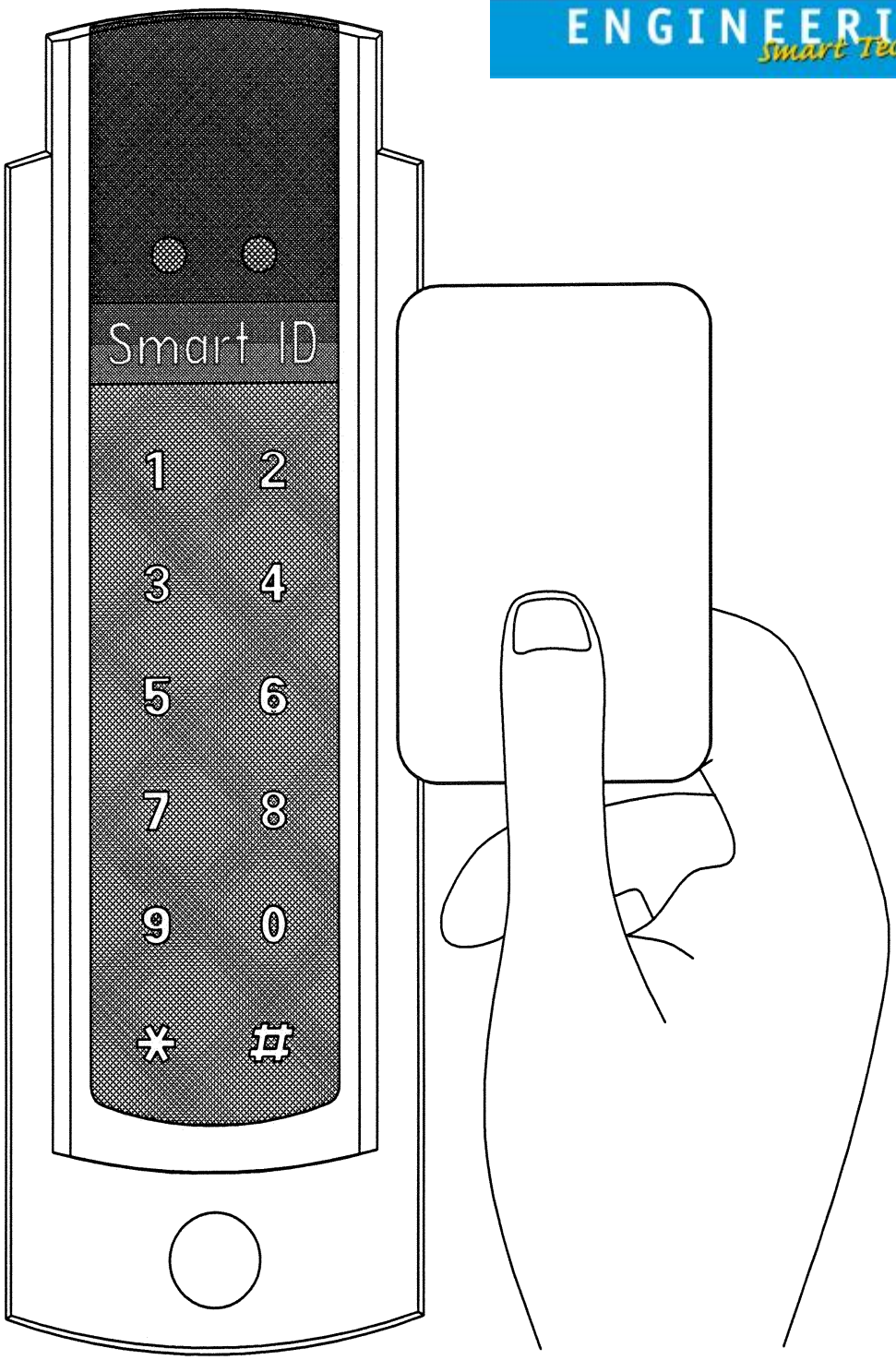

**This manual is applicable for the following SmartID products:**

- **800-8002 SmartID/EM4102**
- **800-8003 SmartID/EM4102/RS232/RO**
- **800-8001 SmartID/EM4102/pin**
- **800-8015 SmartID/Hitag1&2**
- **800-8016 SmartID/Hitag1&2/RW**
- **800-8008 SmartID/Hitag1&2/PIN**
- **800-8025 Mifare Serial number Reader/Rs232**
- **800-8030 ISO14443-3 Mifare Sector reader**
- **800-8045 ISO14443-3 Mifare Sector reader and pinpad**
- **800-8062 SmartID/ISO14443-3/MifareDual/RO**
- **800-8077 SmartID/ISO14443-3/PIN/MifareDual**
- **800-8060 ISO14443-4 DESFire reader (PIV II)**
- **800-8061 ISO14443-4 DESFire reader**
- **800-8076 ISO14443-4DESFire PINpad reader**
- **800-8075 ISO14443-4DESFire PINpad reader (PIV II)**
- **800-8063 ISO14443-4 DESFire and Mifare reader**
- **800-8078 ISO14443-4 DESFire and Mifare PINpad reader**
- **800-8080 ISO14443-4 reader (ISO7816-4, PIV II)**
- **800-8085 ISO14443-4 PINpad reader (ISO7816-4, PIV II)**
- **800-8081 ISO14443-4 PINpad reader (ISO7816-4 and Mifare, PIV II)**
- **800-8086 ISO14443-4 PINpad reader (ISO7816-4 and Mifare, PIV II)**
- **800-8100 SmartTRANS**
- **800-8110 SmartTRANS + PIN**

**Extra options for these readers, which are included in this manual, are:**

- **500-0300 Reader Tamper switch**
- **500-9287 SmartID/Mountingplate/Grey (Spacer)**
- **500-8090 SmartID/SPMD (Switch Box Mounting Device)**

## Table of content:


Features ..... 4
Mullion Mounting ..... 5
Indications ..... 5
Connections ..... 5
Output protocols ..... 5
Security ..... 6
Specifications ..... 7
Typical read range with an ISO Card ..... 7
Power Supply ..... 7
Power requirements ..... 7
Interface ..... 7
Dimensions ..... 7
Material ..... 7
Operating temperature ..... 7
Certifications ..... 8
Cable Distance ..... 9
SIA recommended cable type for Wiegand signals .. 10
Wiegand Signal Levels ..... 10
Reader output interface and pull-up resistors ..... 10
Timing ..... 11
Installation instruction ..... 12
Mullion Mounting ..... 14
Connector Assignments ..... 15
Tamper Switch ..... 16
Mounting tool ..... 17
Mounting Plate (Spacer) ..... 19
Notes ..... 20

## Features

**The Smart ID Reader has a slim door style mountable design to match any decor. The sunk LED's and buzzer allow the Smart ID Readers to be mounted indoors and outdoors.**

**The Smart ID Reader accepts 5 to 12 Volts DC. The reader output formats like clock-and-data magstripe (ABA / ISO7811), Wiegand and a number of other formats are determined by the personalization of the card or configuration of the reader. The 5 Volt DC capability allows the replacement of older reader systems without rewiring or pulling new cables. The Smart ID Reader offers high reliability, consistent read characteristics and low power consumption.**

**Within the Smart ID Proximity Reader Family also models with a RS232/RS422/RS485 interface are available for read-only and read/write operations. The RS232/RS422/RS485 have not been evaluated by UL.**

**The Smart ID Reader Family supports both the 125KHz and 13.56MHz technologies. Different models are available for EM4102, HiTAG1 and 2, Mifare, DESFire and I·Code technology. Standard capabilities include Host system controlled red and green LED's and a buzzer.**

**The Smart ID Reader can be mounted on any surface without relevant performance degradation. For mounting on a metal surface a spacer is advised.**

**Our commitment is to bring non-propriety, open Radio Frequent Identification (RFID) systems to the market demonstrated with the Smart ID Reader Family.**

*

## Mullion Mounting

**The Smart ID Readers can be mounted on a door mullion.**
**Optional there is a mounting kit available in case the small Smart ID reader will be mounted over a wall box (mounting US back box, vertical 84 milimeter (3.31 inch), mounting European back box, horizontal 60 millimeter (2.36 inch)).**

## Indications

**When a proximity card is decoded successfully the with the card associated code is send to the Host system and the buzzer sounds a short 3KHz beep. Both LED's and the buzzer are also controllable by the Host system.**

## Connections

**The Smart ID Reader Family has a flexible and reliable connector interface. The space for the cable and the connector within the Smart ID housing can be sealed with silicone to withstand harsh environmental conditions.**

## Output protocols

**The Smart ID Reader Family can operate with any facility, system or card coding scheme. The output format, contents and length are determined by the personalization of the card or configuration of the reader. Output formats like magstripe, Wiegand and several others are available.**

## Security

**Depending on the model and the RF technology used the Smart ID Reader Family offers high security challenge response schemes to protect the RFID air interface against various attacks schemes like record & playback attacks.**

## Specifications

**Typical read range with an ISO Card**

| | |
|---|---|
| EM4102 | up to 7.5 cm (2.95 inch) |
| Hitag1&2 | up to 8 cm (3.15 inch) |
| ISO14443 | up to 3 cm (1.8 inch) |
| ISO15693 | up to 15 cm (5.91 inch) |
| DESFire | up to 2 cm (0.79 inch) |

**Power Supply**
5 – 12 Volt DC

**Power requirements**
*ISO 14443 readers (UL listed)*

| | |
|---|---|
| Average Power Consumption | 1.5 Watt |
| Peak Power Consumption | 2.0 Watt |

*125 kHz readers*

| | |
|---|---|
| Average Power Consumption | 860 mW |
| Peak Power Consumption | 940 mW |

**Interface**

| | |
|---|---|
| Inputs | EMC Prot. 10K ohm pull-ups |
| Outputs | EMC Prot. open drain 0.5 A/max |

**Dimensions**
142 x 46.2 x 25 mm (5.59 x 1.81 x 0.98 inch)

**Material**
SB housing with polyurethane potting

**Operating temperature**
-20° to 60° C (-4 to 140 Fahrenheit)

## Certifications
**CE, FCC, IC**

**FCC ID's are:**

- **EM4102: Smart-ID/EM4102**
  **P4E-SMARTPIN-2**
- **Hitag1&2: Smart ID/Hitag1&2**
  **P4E-SMARTPIN-2**
- **ISO14443: Smart ID/ ISO14443/SNR/RS232**
  **P4E-SMARTPIN-1**
- **ISO 14443-3: Smart ID/ISO14443-3/Sect**
  **P4E-SMARTPIN-1**
- **DESFire: Smart ID/DESFire**
  **P4E-SMARTPIN-1**
- **ISO 14443 & 125 kHz Prox: SmartTRANS**
  **P4E-SMARTPIN-4**

**IC (Canada)**

- **ISO14443: Smart ID/ ISO14443/SNR/RS232**
  **IC: 6690A-SMARTPIN-1**
- **ISO 14443-3: Smart ID/ISO14443-3/Sect**
  **IC: 6690A-SMARTPIN-1**
- **DESFire: Smart ID/DESFire**
  **IC: 6690A-SMARTPIN-1**

**Consult your National Authority if any authorization is needed for this product.**
**This device complies with Part 15 of the FCC Rules. Operation is subject to the following two conditions:**

1) **that this device does not cause harmful interference, and**
2) **that this device must accept any interference received, including interference that may cause undesired operation.**

## UL Listing (listed 800-80XX)

**The SmartID ISO14443-4DESFire PINpad reader (Wiegand output) is confirm UL294 (Access Control System Units) requirements. The following readers are confirm the UL 294 listing:**

- **800-8030 ISO14443-3 Mifare Sector reader**
- **800-8062 SmartID/ISO14443-3/MifareDual/RO**
- **800-8077 SmartID/ISO14443-3/PIN/MifareDual**
- **800-8060 ISO14443-4 DESFire reader (PIV II)**
- **800-8061 ISO14443-4 DESFire reader**
- **800-8076 ISO14443-4DESFire PINpad reader**
- **800-8075 ISO14443-4DESFire PINpad reader (PIV II)**
- **800-8063 ISO14443-4 DESFire and Mifare reader**
- **800-8078 ISO14443-4 DESFire and Mifare PINpad reader**
- **800-8080 ISO14443-4 reader (ISO7816-4, PIV II)**
- **800-8085 ISO14443-4 PINpad reader (ISO7816-4, PIV II)**
- **800-8081 ISO14443-4 PINpad reader (ISO7816-4 and Mifare, PIV II)**
- **800-8086 ISO14443-4 PINpad reader (ISO7816-4 and Mifare, PIV II)**

## Cable Distance

**Up to 150 meter (492 foot), depending on output protocol and cable type. Recommended cable type: stranded conductor with overall stranded shield or equivalent**

**SIA recommended cable type for Wiegand signals**

| Cable Length | Cable | Diameter inch | Diameter mm |
|---|---|---|---|
| Up to 61m (200.1 ft) | AWG22 | 0.025 | 0.64 |
| Up to 91m (301.8 ft) | AWG20 | 0.03 | 0.82 |
| Up to 153m (502 ft) | AWG18 | 0.04 | 1.02 |

**Recommended cable for clock and data ABA track 2 emulation: Up to 25 meter (82 foot), AWG22.**

**Wiegand Signal Levels**
**Voh = Output Voltage idle high**
**Vol = Output Voltage active low**

**Reader output interface and pull-up resistors**
**The SmartID readers provided true open collector outputs for Wiegand/Clock&Data ABA track 2 emulation. This means the data output is not voltage driven.**

**External pull-up resistors are required when the controller does not provide internal pull-up resistors. The typical value for the pull-up resistors is 1 kOhm. The recommend position to place the pull-up resistors is at the controller side.**

**The pull-up resistor #1 connects form Data/D1 (reader connector pin 3) to a 5 Volt reference.**
**The pull-up resistor #2 connects form Clock/D0 (reader connector pin 4) to a 5 Volt reference.**

# Timing

## Typical timing for Wiegand

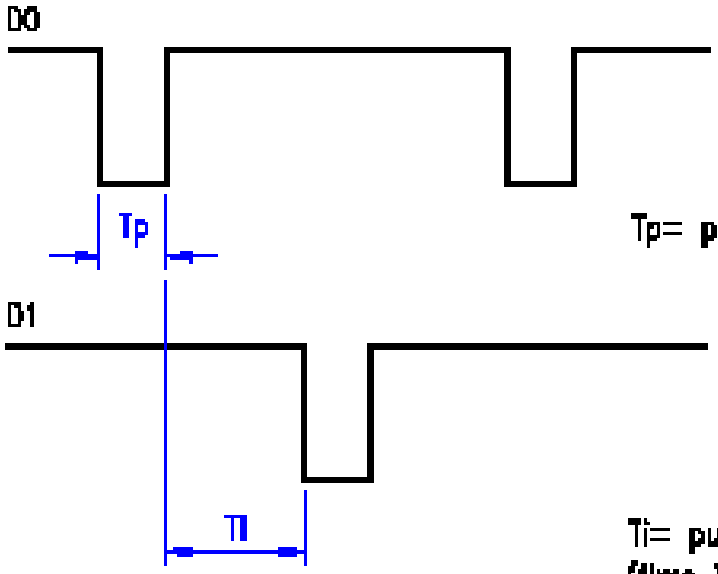


Tp= pulse time= 75 µs

Ti= pulse interval= 1050 µs
(time in between pulses)

## Typical timing for ABA track 2 emulation

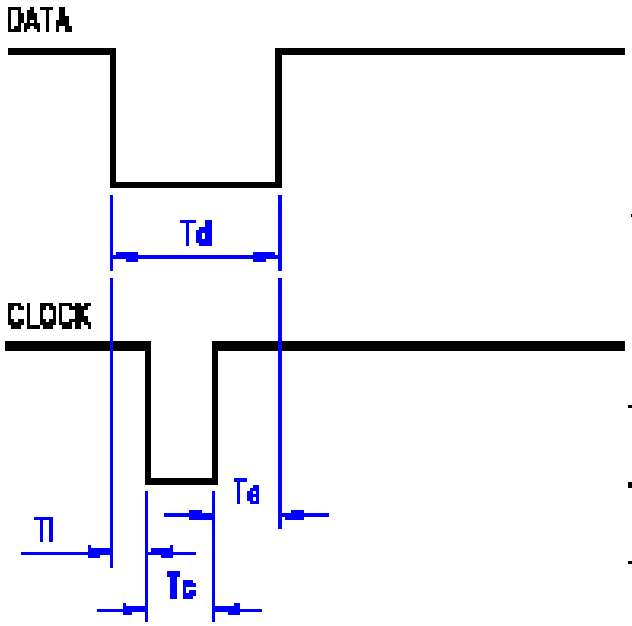


Td= data pulse length= 300 µs

Tc= clock pulse length= 75 µs

Ti= data to leading edge clock= 75 µs

Ta= trailing clock edge to data= 150 µs

## Installation instruction

1) **Determine an appropriate position for the Reader and drill two holes for mounting the reader to the surface (see mullion mounting drawing on 13). Do not mount the readers less than 20 cm (7.87 inch) from each other. Make sure that enough room to connect the cable is allowed. Protect the cable against sharp edges and any damage from chaffing.**

2) **Remove the Terminal Connector 8 pins from the back of the Reader. Use a small flat head screwdriver to loosen off all of the terminals. The end of the cable should be prepared by cutting it back to expose the wires and each end should be twisted to eliminate any loose or frayed wires.**

3) **The wires should then be connected to the Reader inline with the Connector Assignments. Wire ends outside the shielding and optional permanent LED links should be kept as short as possible. Twist the connector a few times to twine the wire ends to avoid differential mode interference on the data lines.**

   **Note: wires at the connector must be kept as short as possible: long, unshielded connections will reduce the sensitivity of the reader.**

4) **After wiring the reader and the Host system the Reader is ready to be tested. Apply power and present a Card to the Reader. The green LED should flash and the buzzer should beep indicating a read. If the Host system is connected to the red and green LED inputs these should follow the functionality of the Host system.**

5) **The Reader can now be secured to the surface using the appropriate screws. Mount the black cover (sticker) and mount the cap over the mounting hole.**

## Mullion Mounting

**The size in the drawing is in mm. 1 mm is 0.039 inch.**

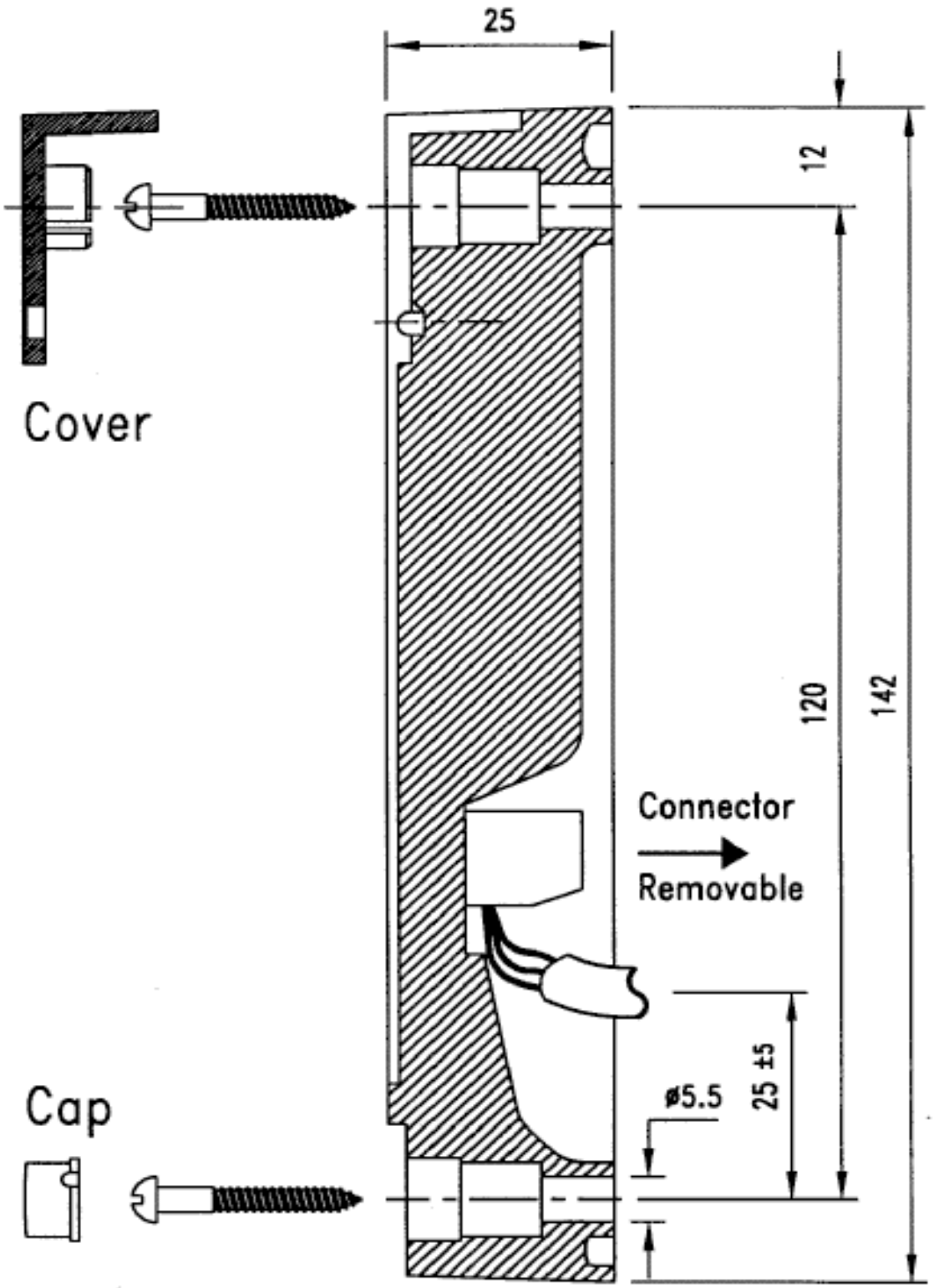

## Connector Assignments

| | Clock/Data (ABA) | Wiegand | RS232* | RS422* |
|---|---|---|---|---|
| 1 | Green LED input | Green LED input | Green LED input)** | Green LED input)** |
| 2 | Led LED input | Led LED input | Led LED input)** | Led LED input)** |
| 3 | Data | D1 | Do not connect | TXA |
| 4 | Clock | D0 | TXD | TXB |
| 5 | Buzzer input | Buzzer input | Do not connect | RXA |
| 6 | Do not Connect | Do not Connect | RXD | RXB |
| 7 | Ground | Ground | Ground | Ground |
| 8 | Power 5 to 12.00 VDC | Power 5 to 12.00 VDC | Power 5 to 12.00 VDC | Power 5 to 12.00 VDC |

**Attention: 4.5 Volt DC is MINIMUM VOLTAGE AT READER CONNECTOR PINS**

**Optional tamper contact: rating 1A 30 VDC**

*** RS232/RS422/RS485 are not evaluated by UL.**
**** LED input only valid in read-only applications**

*Optional*

# Tamper Switch

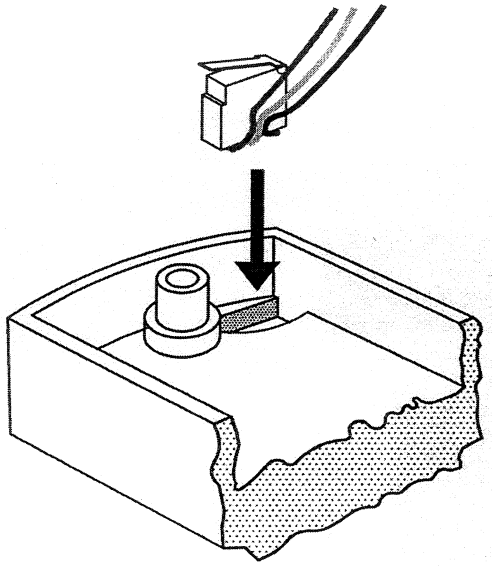

MOUNTING:
Push switch in opening
with cables in showed direction

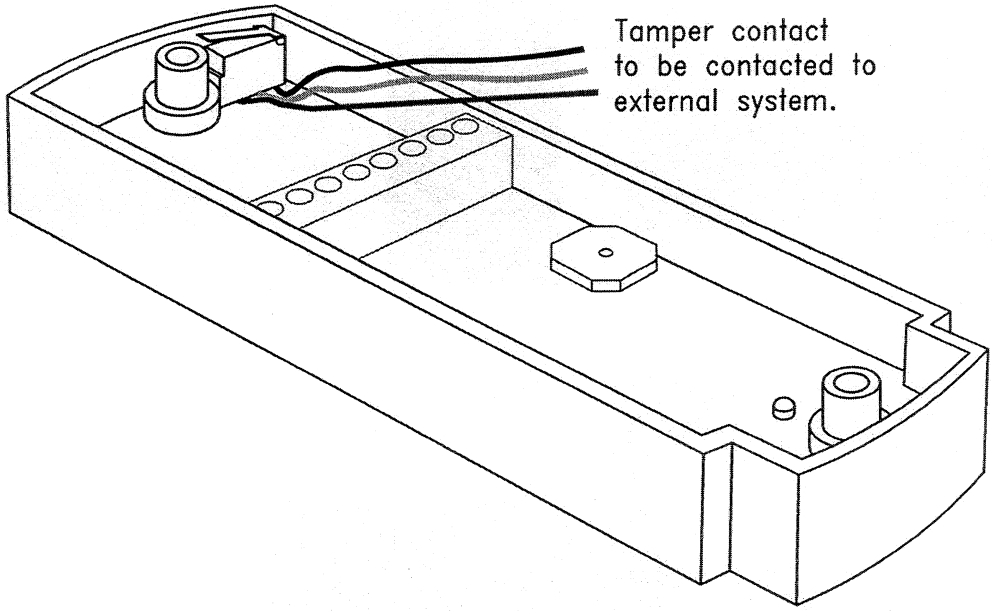

Tamper contact
to be contacted to
external system.

TAMPER SWITCH

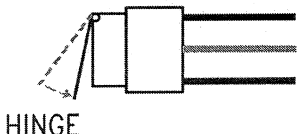


BLACK (COMMON)
WHITE (NC: HINGE DOWN, READER MOUNTED ON WALL)
RED (NO: HINGE DOWN, READER MOUNTED ON WALL)

*Optional*

# Mounting tool

**The sizes in the drawing is in mm. 1 mm is 0.039 inch.**

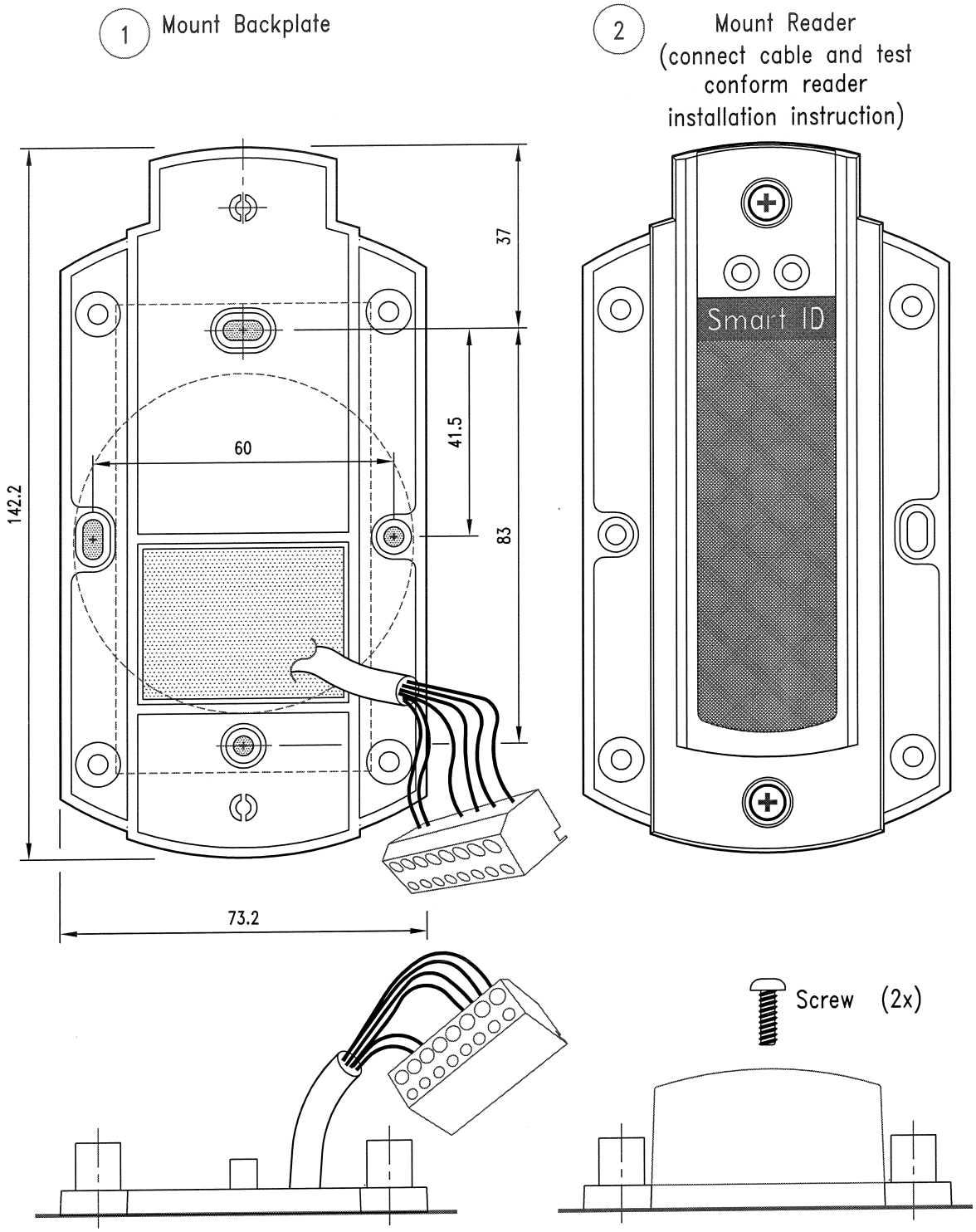


Smart ID MOUNTING KIT

3 Mount Side Caps
Left and right

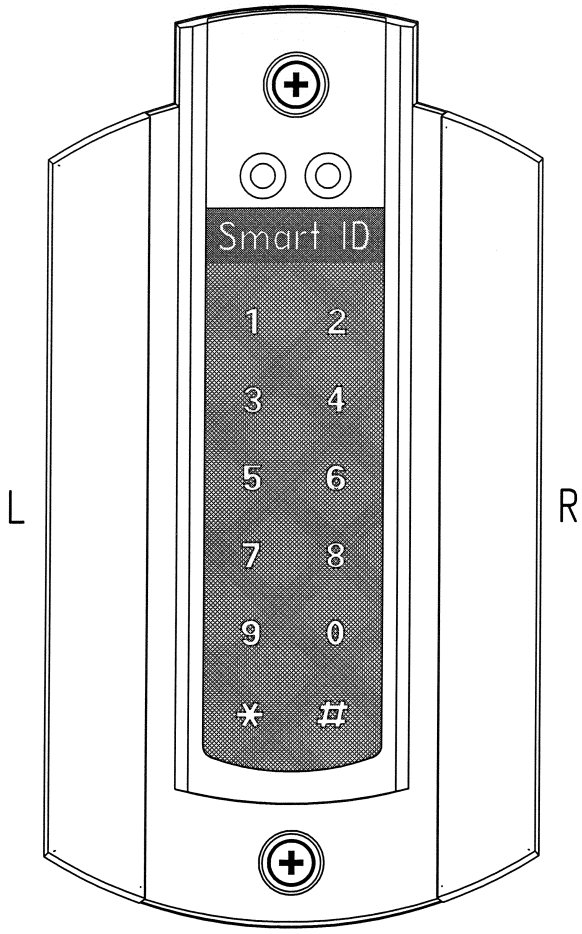


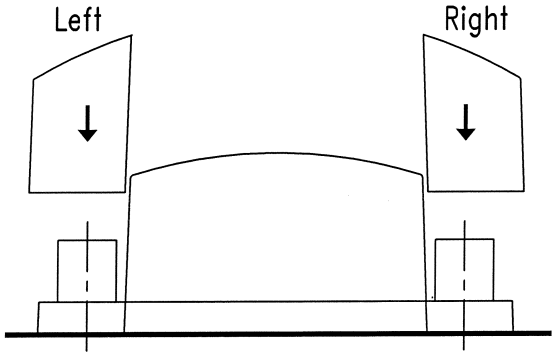


(After mounting: Side Caps can't be removed!)

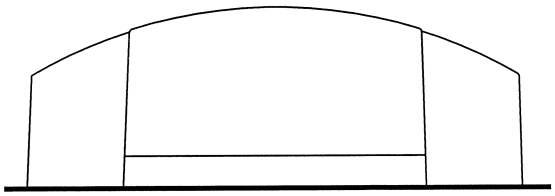

4 Mount Cover
(take off sticker paper)
and mount Cap

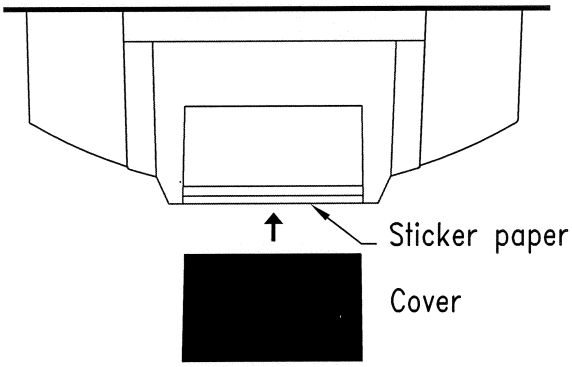


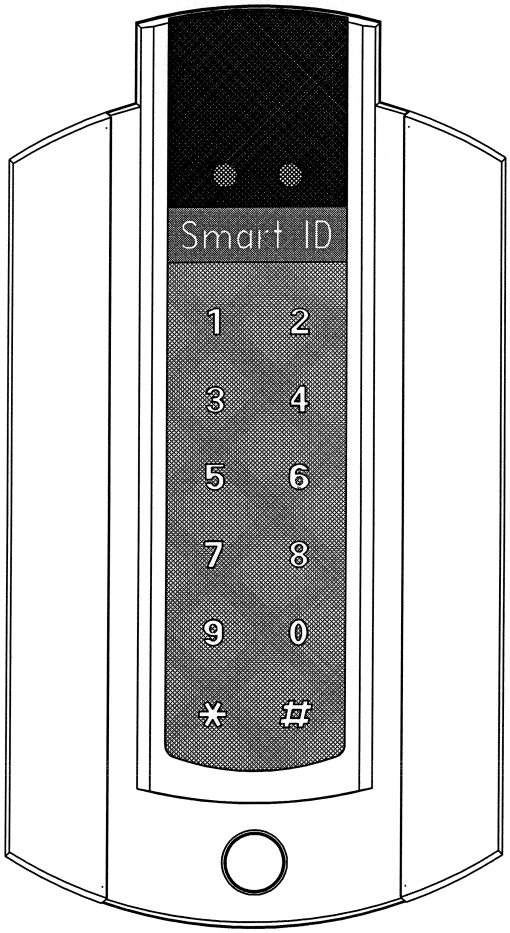


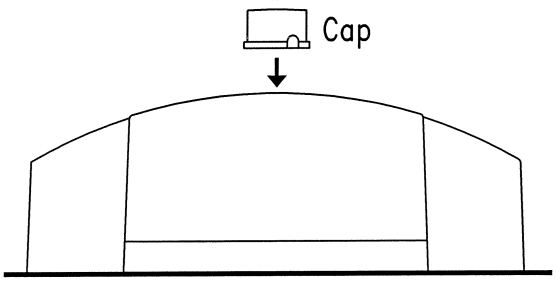


(If needed, reader can be removed without removing the Side Caps)

*Optional*

# Mounting Plate (Spacer)

## The sizes in the drawing is in mm. 1 mm is 0.039 inch.

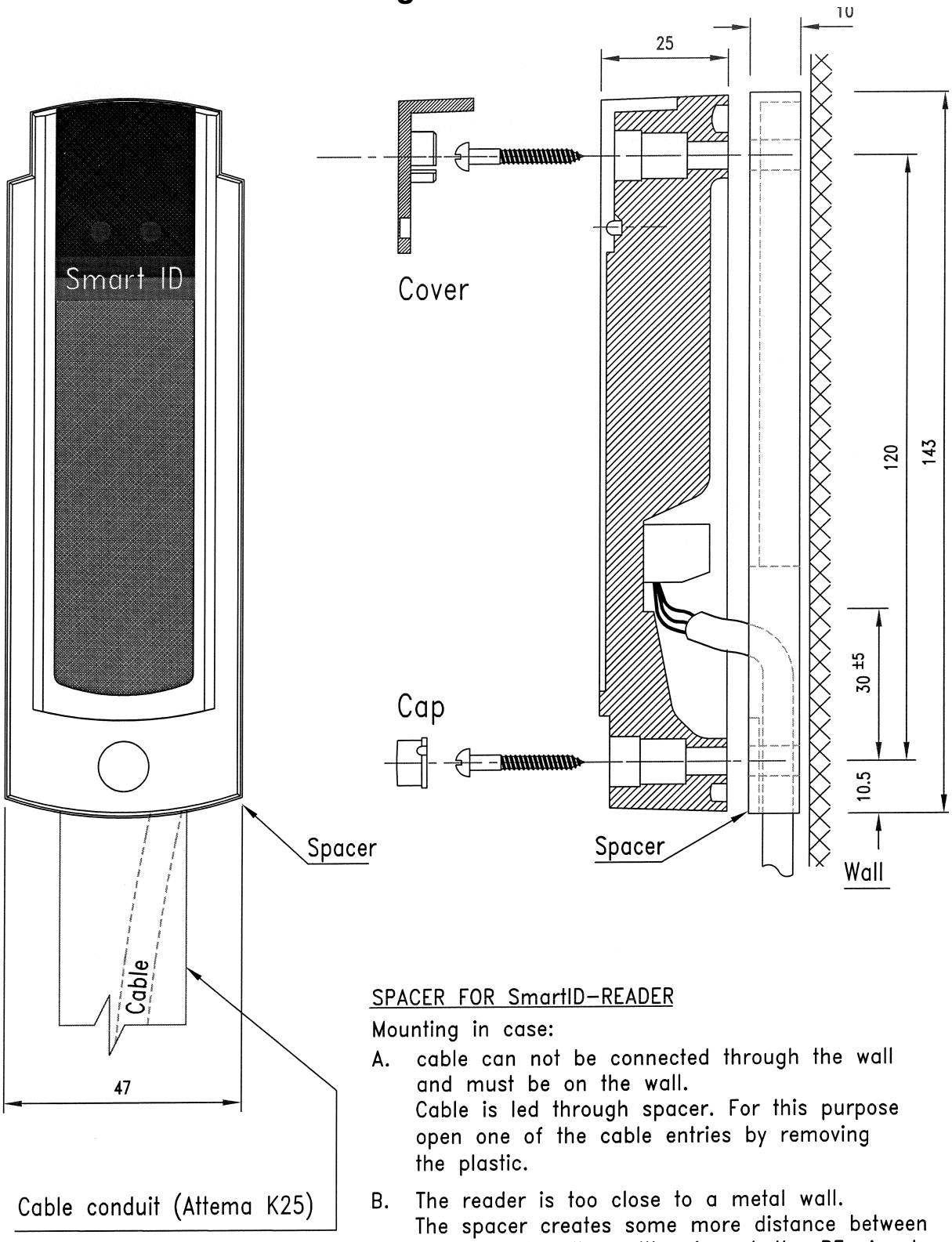


SPACER FOR SmartID–READER

Mounting in case:

A. cable can not be connected through the wall and must be on the wall.
Cable is led through spacer. For this purpose open one of the cable entries by removing the plastic.

B. The reader is too close to a metal wall.
The spacer creates some more distance between reader and wall resulting in a better RF–signal.

The crossed-out wheeled bin means that within the European Union the product must be taken to separate collection at the product end-of life. This applies to your device but also to any enhancements marked with this symbol. Do not dispose of these products as unsorted.

**Approval**
If used according to the instructions, this radio system meets the basic requirements of article 3 and the remaining applicable conditions of the R&TTE directive (1999/5/E6) of March 1999.

© Copyright 2006
Issue: July 2006 – This manual supercedes and renders invalid all earlier versions. The information in this manual can be changed without prior notice.

The information in this manual has been put together to the best of the authors' knowledge and conscience. The manufacturers accepts no liability for the accuracy or completeness of the information in this manual. In particular, the manufacturer cannot be held liable for consequential damages caused as a result of incorrect or incomplete information. As it is impossible to avoid mistakes despite all our efforts, we are always grateful if these are pointed out.

The installation recommendations contained in this manual assume the most favorable framework conditions. The manufacturer cannot guarantee that the system will function perfectly under other conditions.

The manufacturer cannot guarantee that the information contained in this document is not protected by external property rights. The manufacturer is not granting licenses to its own or external patents or other property right.