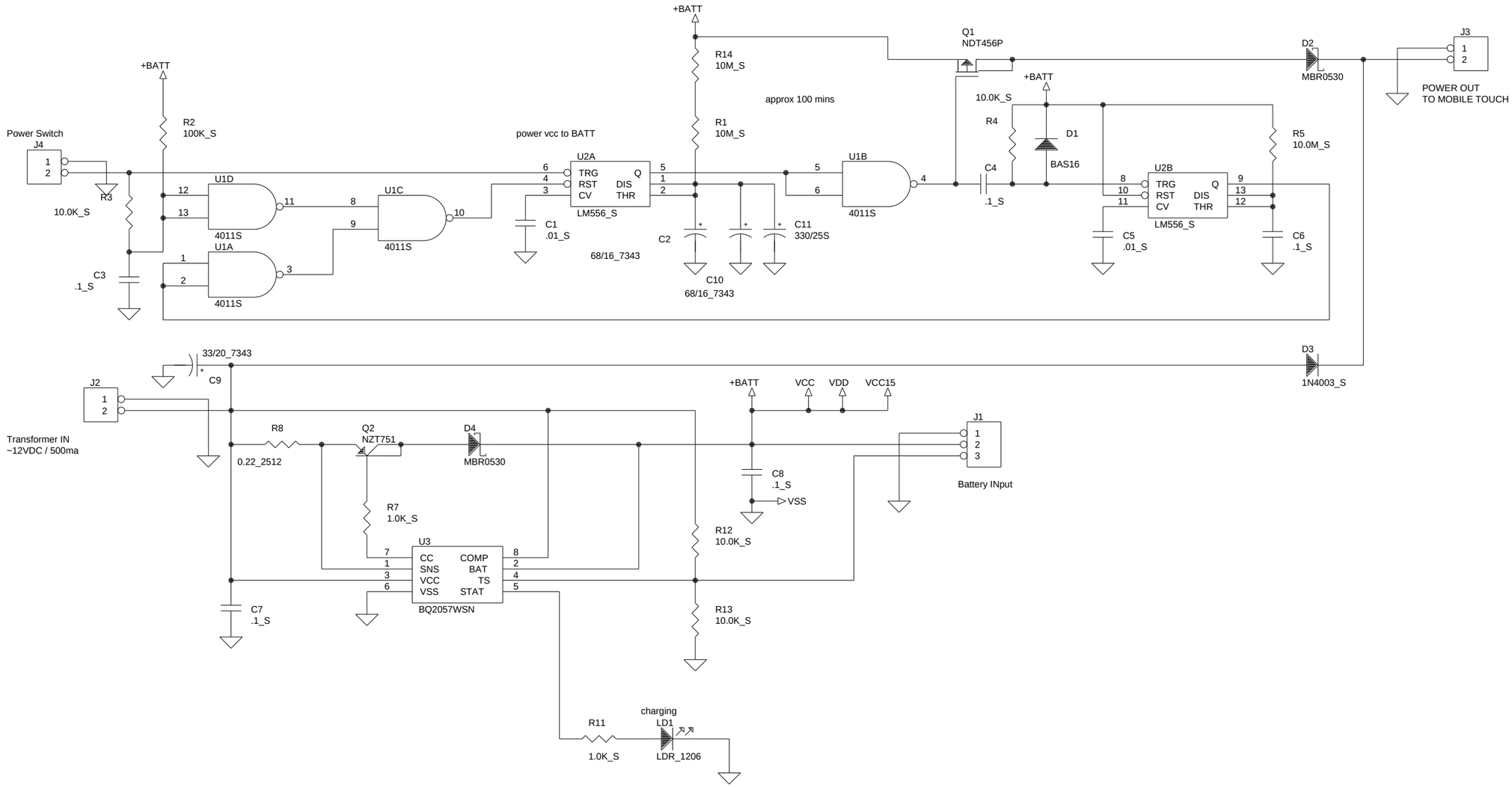

Size	Document Number	REV
B		
Date: January 26, 2003	Sheet 1 of 1	

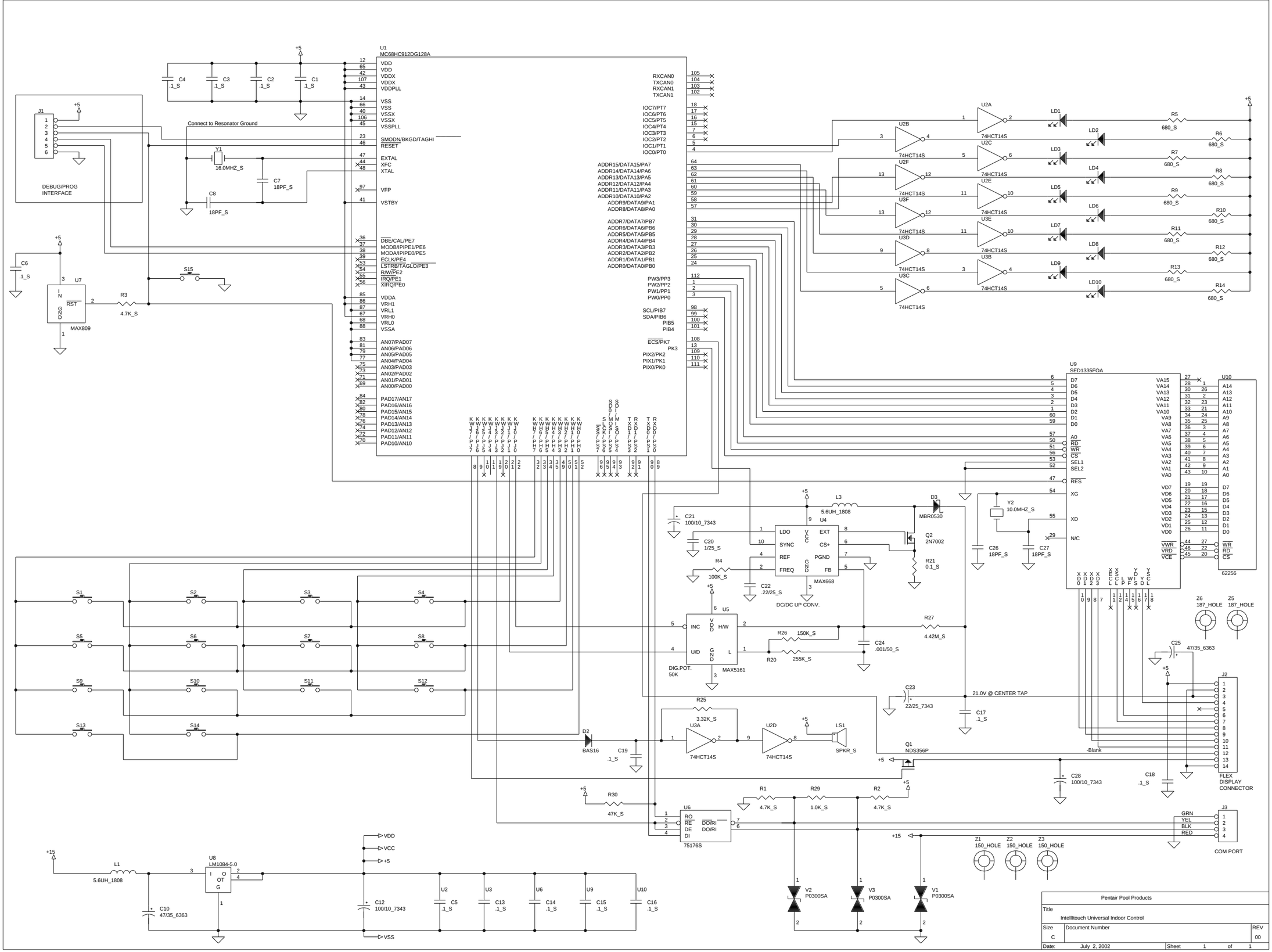
U1
MC68HC912DG128A
VDD
VDD
VDDX
VDDX
VDDPLL
VSS
VSS
VSSX
VSSX
VSSPLL
SMODN/BKGD/TAGHI
RESET
EXTAL
XFC
XTAL
VFP
VSTBY
DBE/CAL/PE7
MODB/IPIPE1/PE6
MODA/IPIPE0/PE5
ECLK/PE4
LSTRB/TAGLO/PE3
R/W/PE2
IRQ/PE1
XIRQ/PE0
VDDA
VRH1
VRL1
VRH0
VRL0
VSSA
AN07/PAD07
AN06/PAD06
AN05/PAD05
AN04/PAD04
AN03/PAD03
AN02/PAD02
AN01/PAD01
AN00/PAD00
PAD17/AN17
PAD16/AN16
PAD15/AN15
PAD14/AN14
PAD13/AN13
PAD12/AN12
PAD11/AN11
PAD10/AN10
RXCAN0
TXCAN0
RXCAN1
TXCAN1
IOC7/PT7
IOC6/PT6
IOC5/PT5
IOC4/PT4
IOC3/PT3
IOC2/PT2
IOC1/PT1
IOC0/PT0
ADDR15/DATA15/PA7
ADDR14/DATA14/PA6
ADDR13/DATA13/PA5
ADDR12/DATA12/PA4
ADDR11/DATA11/PA3
ADDR10/DATA10/PA2
ADDR9/DATA9/PA1
ADDR8/DATA8/PA0
ADDR7/DATA7/PB7
ADDR6/DATA6/PB6
ADDR5/DATA5/PB5
ADDR4/DATA4/PB4
ADDR3/DATA3/PB3
ADDR2/DATA2/PB2
ADDR1/DATA1/PB1
ADDR0/DATA0/PB0
PW3/PP3
PW2/PP2
PW1/PP1
PW0/PP0
SCL/PIB7
SDA/PIB6
PIB5
PIB4
ECS/PK7
PK3
PIX2/PK2
PIX1/PK1
PIX0/PK0
Connect to Resonator Ground
DEBUG/PROG
INTERFACE
J1
Y1
16.0MHZ_S
C7
18PF_S
C8
18PF_S
C1
C2
C3
C4
.1_S
+5
C6
.1_S
U7
MAX809
R3
4.7K_S
S15
U2A
U2B
U2C
U2D
U2E
U2F
U3A
U3B
U3C
U3D
U3E
U3F
74HCT14S
LD1
LD2
LD3
LD4
LD5
LD6
LD7
LD8
LD9
LD10
R5
R6
R7
R8
R9
R10
R11
R12
R13
R14
680_S
U9
SED1335FOA
U10
62256
Y2
10.0MHZ_S
C26
18PF_S
C27
18PF_S
L3
5.6UH_1808
D3
MBR0530
Q2
2N7002
R21
0.1_S
C21
100/10_7343
C20
1/25_S
R4
100K_S
C22
.22/25_S
U4
LDO
SYNC
REF
FREQ
VCC
EXT
CS+
PGND
FB
GND
MAX668
DC/DC UP CONV.
U5
INC
U/D
VDD
H/W
GND
L
MAX5161
DIG.POT.
50K
R26
150K_S
R20
255K_S
C24
.001/50_S
R27
4.42M_S
C23
22/25_7343
21.0V @ CENTER TAP
C17
.1_S
Z6
187_HOLE
Z5
187_HOLE
C25
47/35_6363
J2
FLEX
DISPLAY
CONNECTOR
-Blank
Q1
NDS356P
C28
100/10_7343
C18
.1_S
R25
3.32K_S
D2
BAS16
C19
.1_S
LS1
SPKR_S
R30
47K_S
U6
RO
RE
DE
DI
DO/RI
75176S
R1
4.7K_S
R29
1.0K_S
R2
4.7K_S
J3
GRN
YEL
BLK
RED
COM PORT
Z1
150_HOLE
Z2
150_HOLE
Z3
150_HOLE
V2
P0300SA
V3
P0300SA
V1
P0300SA
+15
L1
5.6UH_1808
U8
LM1084-5.0
C10
47/35_6363
C12
100/10_7343
U2
C5
.1_S
U3
C13
.1_S
U6
C14
.1_S
U9
C15
.1_S
U10
C16
.1_S
VDD
VCC
VSS
S1
S2
S3
S4
S5
S6
S7
S8
S9
S10
S11
S12
S13
S14
Pentair Pool Products
Title
Intelliitouch Universal Indoor Control
Size
C
Document Number
REV
00
Date: July 2, 2002
Sheet 1 of 1

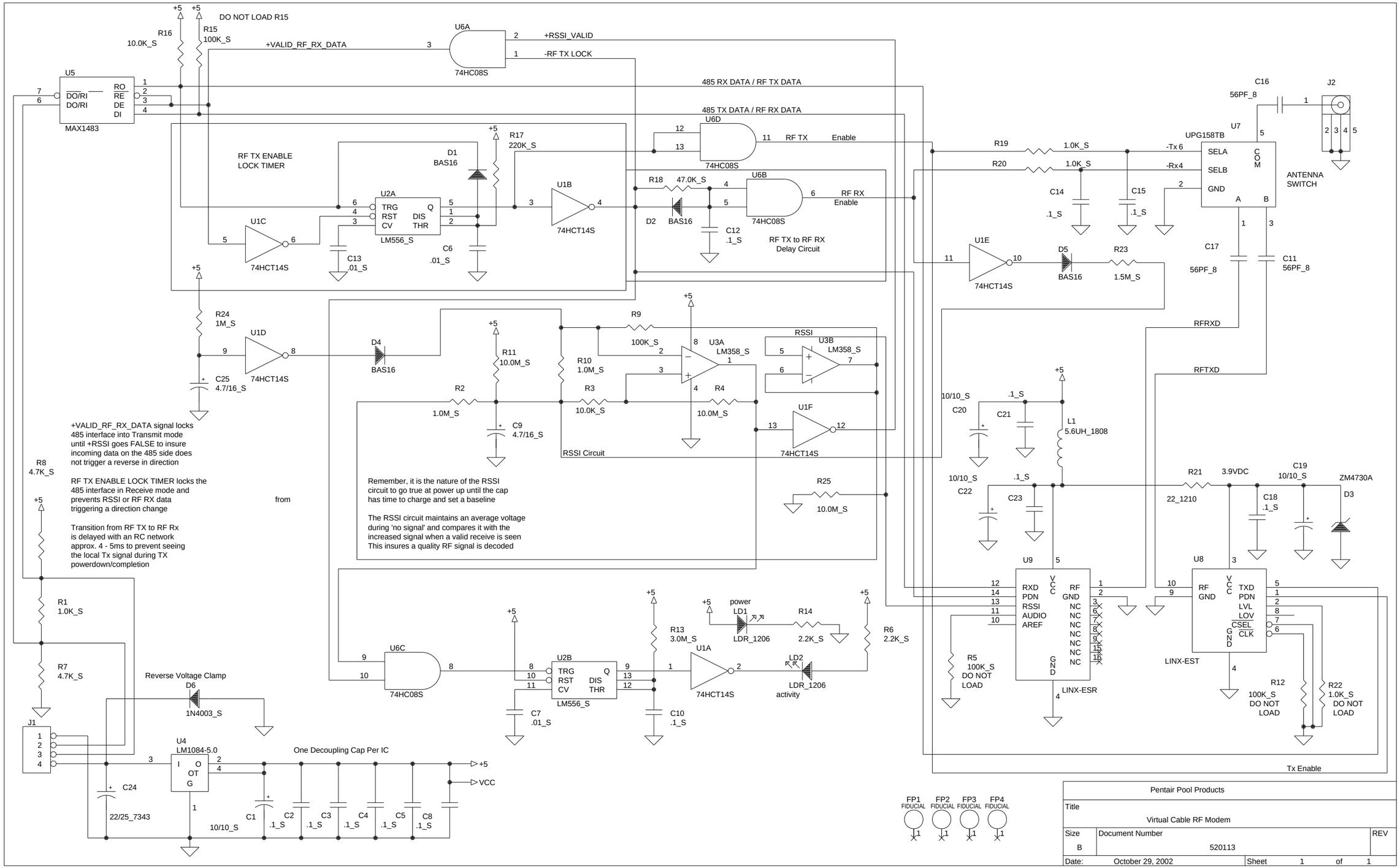

Pentair Pool Products			
Title	Virtual Cable RF Modem		
Size B	Document Number 520113		REV
Date: October 29, 2002	Sheet 1 of 1		