AnyDATA.NET

APPROVAL SHEET

ITEM : HW - 3BM - SMA

FREQUENCY : TRIPLE MAGNET-ANTENNA

FOR CDMA/USPCS/GPS

HANUL Technology

TEL. : 032) 678-8614

032)678-8610

FAX. : 032) 678-8615

ANTENNA SPECITICATION

1. ITEM : HW-3BM-SMA

2. Electrical Specifications

No.	ELECTRICAL DATA	SPECIFICATIONS		REMARK
2.1	RESONANCE FREQUENCY	AMPS	824MHz-894MHz	
		GPS	1575MHz	
		UPPCS	1850MHz-1990MHz	
2.2	IMPEDANCE	50Ω NOMINAL		
2.3	GAIN	CDMA	+ 1dBi	Peak
		GPS	-4dBi	
		USPCS	+ 1dBi	
2.4	ELECTRICAL LENGTH	1/4λ		
2.5	RADIATION PATTERN	OMNI – DIRECTIONAL		
2.6	POLARIZATION	VERTICAL		

3. Mechanical Specifications

No.	MECHANICAL	SPECIFICATIONS	REMARK
3.1	ELEMENT	Ø0.5-PWG	Ni-PLATING
3.2	SLEEVE	URETHANE	BLACK-COLOR
3.3	COVER	ABS	BLACK-COLOR
3.4	CONNECTOR	SMA(Male)	GOLD-PLATING
3.5	TOTAL LENGTH	85 ± 2.0 mm	

4. Antenna Configuration

한울 Technology	TOL Unless Noted	DIMENSION	mm	No	DATE	REVISION	CHECKER
	X. =±0.5	SCALE		1	200 . . .		
	X.X = ±0.1	MATERIAL		2	200 . . .		
	X.XX = ±0.05	FINISH		3	200 . . .		

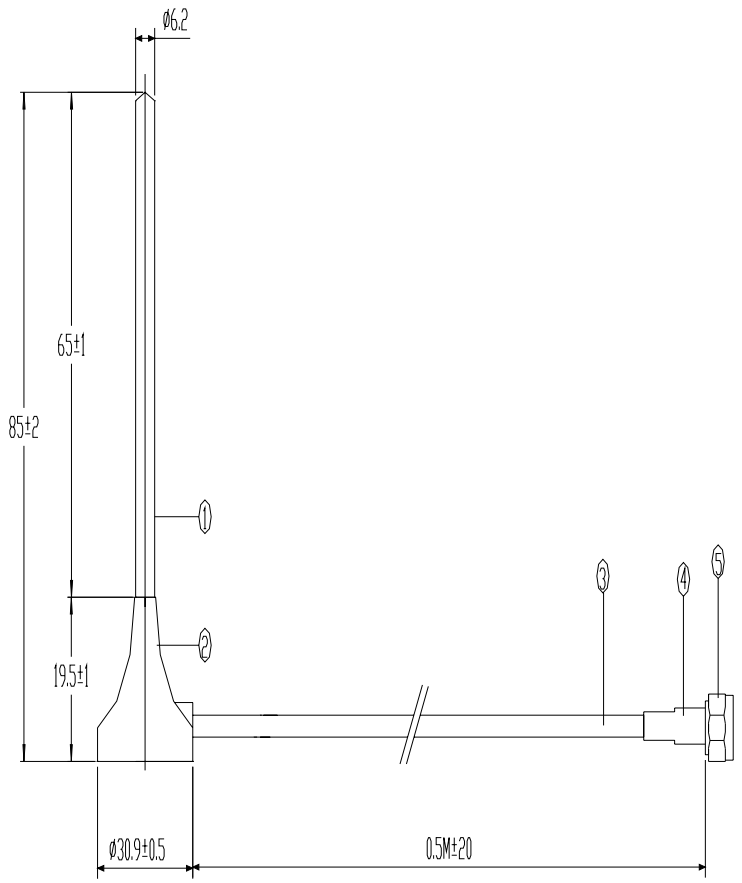

5	SMA(Male) CRIMP TYPE	BRASS	GOLD-PLATING
4	SHRINKABLE TUBE	PO	BLACK-COLOR
3	COAX-CABLE	RG-174	
2	COVER	ABS	BLACK-COLOR
1	SLEEVE	URETHANE	BLACK-COLOR
No.	PART NAME	MATERIAL	FINISH

TITLE	Triple Antenna Ass'y		MODEL	HW-3BM-SMA	
Drawn	Checked	Approval	Date	DWG No.	File Name
K.J.CHO		C.G.NAM	2004.6.14	0406141	AnyData

한울바꼴회

5. Measurement Result

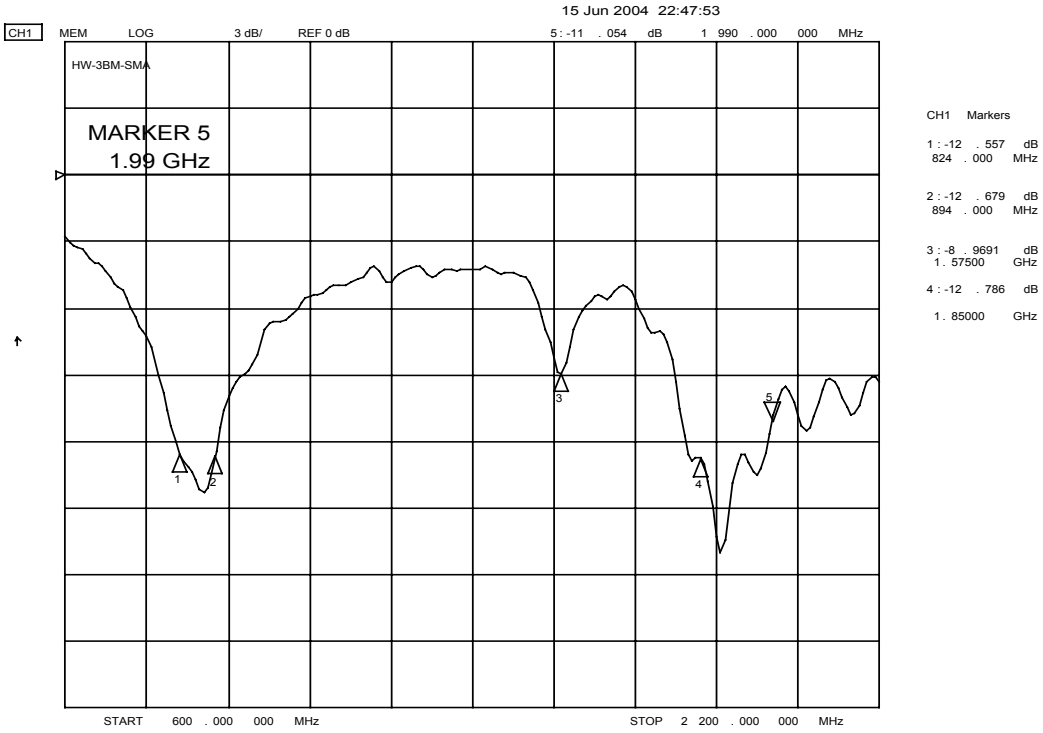

MARKER PARAM	Channel 1	Channel 2	Channel 3	Channel 4
MARKER 1	824 . 000000MHz	0. 000000MHz	0. 000000MHz	0 . 000000MHz
	-12 . 557 dB	OFF	OFF	OFF
MARKER 2	894 . 000000MHz	0. 000000MHz	0. 000000MHz	0 . 000000MHz
	-12 . 679 dB	OFF	OFF	OFF
MARKER 3	1575 . 000000MHz	0. 000000MHz	0. 000000MHz	0 . 000000MHz
	-8 . 9691 dB	OFF	OFF	OFF
MARKER 4	1850 . 000000MHz	0. 000000MHz	0. 000000MHz	0 . 000000MHz
	-12 . 786 dB	OFF	OFF	OFF
MARKER 5	1990 . 000000MHz	0. 000000MHz	0. 000000MHz	0 . 000000MHz
	-11 . 054 dB	OFF	OFF	OFF
MKR STIM OFFSET	0 . 000000MHz	0. 000000MHz	0. 000000MHz	0 . 000000MHz
	0 dB	0 dB	. 0000 dB	0 dB
REFERENCE MARKER	OFF	OFF	OFF	OFF
PLACEMENT	CONTINUOUS	CONTINUOUS	CONTINUOUS	CONTINUOUS
MARKER SEARCH	OFF	OFF	OFF	OFF
TARGET VALUE	-3 dB	-3 dB	-3 dB	-3 dB
MKR WIDTH VALUE	-3 dB	-3 dB	-3 dB	-3 dB
	OFF	OFF	OFF	OFF
MARKER TRACKING	OFF	OFF	OFF	OFF
SMOOTH APERTURE	1 % SPAN	1 % SPAN	1 % SPAN	1 % SPAN
	OFF	OFF	OFF	OFF
PHASE OFFSET	0 °	0 °	0 °	0 °
ELECTRICAL DELAY	0 s	0 s	0 s	0 s

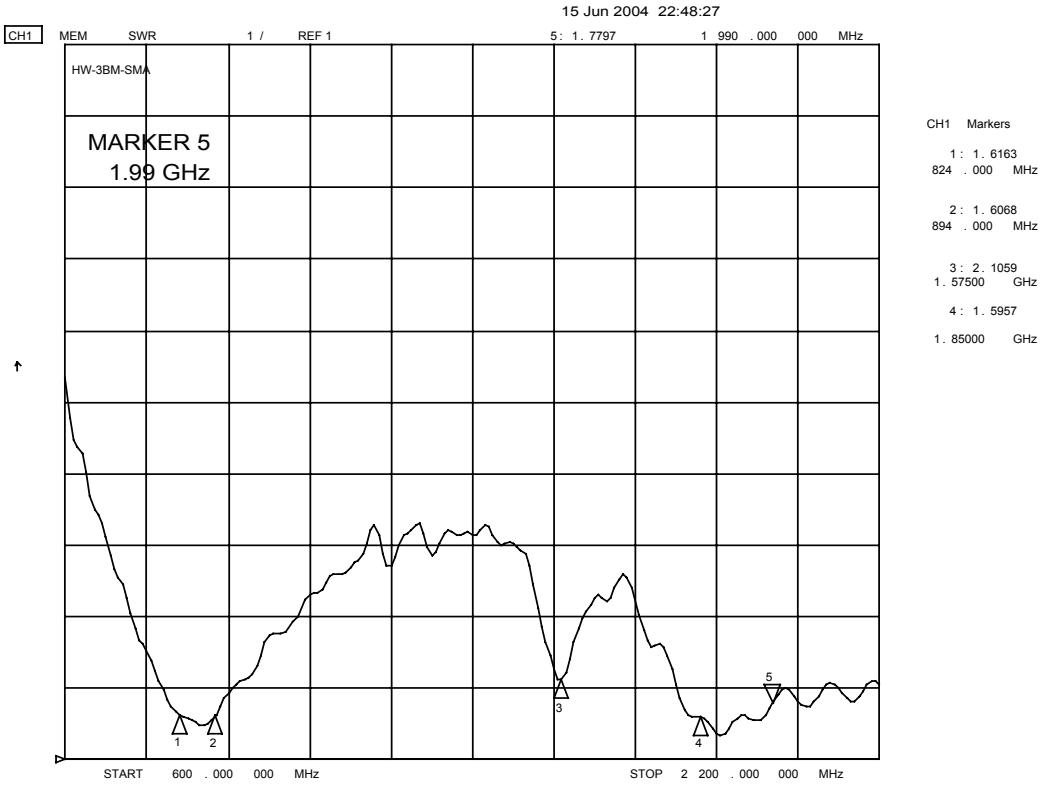

MARKER PARAM	Channel 1	Channel 2	Channel 3	Channel 4
MARKER 1	824 . 000000MHz	0. 000000MHz	0. 000000MHz	0. 000000MHz
	1. 6163	OFF	OFF	OFF
MARKER 2	894 . 000000MHz	0. 000000MHz	0. 000000MHz	0. 000000MHz
	1. 6068	OFF	OFF	OFF
MARKER 3	1575 . 000000MHz	0. 000000MHz	0. 000000MHz	0. 000000MHz
	2. 1059	OFF	OFF	OFF
MARKER 4	1850 . 000000MHz	0. 000000MHz	0. 000000MHz	0. 000000MHz
	1. 5957	OFF	OFF	OFF
MARKER 5	1990 . 000000MHz	0. 000000MHz	0. 000000MHz	0. 000000MHz
	1. 7797	OFF	OFF	OFF
MKR STIM OFFSET	0. 000000MHz	0. 000000MHz	0. 000000MHz	0. 000000MHz
	0	0 dB	. 0000 dB	0 dB
REFERENCE MARKER	OFF	OFF	OFF	OFF
PLACEMENT	CONTINUOUS	CONTINUOUS	CONTINUOUS	CONTINUOUS
MARKER SEARCH	OFF	OFF	OFF	OFF
TARGET VALUE	-3	-3 dB	-3 dB	-3 dB
MKR WIDTH VALUE	-3	-3 dB	-3 dB	-3 dB
	OFF	OFF	OFF	OFF
MARKER TRACKING	OFF	OFF	OFF	OFF
SMOOTH APERTURE	1 % SPAN	1 % SPAN	1 % SPAN	1 % SPAN
	OFF	OFF	OFF	OFF
PHASE OFFSET	0 °	0 °	0 °	0 °
ELECTRICAL DELAY	0 s	0 s	0 s	0 s