System Check_Head_2450MHz

DUT: D2450V2-736

Communication System: CW; Frequency: 2450 MHz;Duty Cycle: 1:1
Medium: HSL_2450_180603 Medium parameters used: f = 2450 MHz; σ = 1.777 S/m; ε_r = 40.325; ρ = 1000 kg/m^3
Ambient Temperature：23.5 ℃; Liquid Temperature：22.5 ℃

DASY5 Configuration:
- Probe: EX3DV4 - SN3976; ConvF(7.75, 7.75, 7.75); Calibrated: 2018/1/23;
- Sensor-Surface: 1.4mm (Mechanical Surface Detection)
- Electronics: DAE4 Sn1338; Calibrated: 2017/12/4
- Phantom: SAM_Right; Type: QD000P40CD; Serial: 1884
- Measurement SW: DASY52, Version 52.10 (1);SEMCAD X Version 14.6.11 (7437)

Pin=250mW/Area Scan (71x71x1): Interpolated grid: dx=1.200 mm, dy=1.200 mm
Maximum value of SAR (interpolated) = 19.3 W/kg

Pin=250mW/Zoom Scan (7x7x7)/Cube 0: Measurement grid: dx=5mm, dy=5mm, dz=5mm
Reference Value = 112.9 V/m; Power Drift = 0.01 dB
Peak SAR (extrapolated) = 27.0 W/kg
SAR(1 g) = 12.5 W/kg; SAR(10 g) = 5.78 W/kg
Maximum value of SAR (measured) = 21.5 W/kg

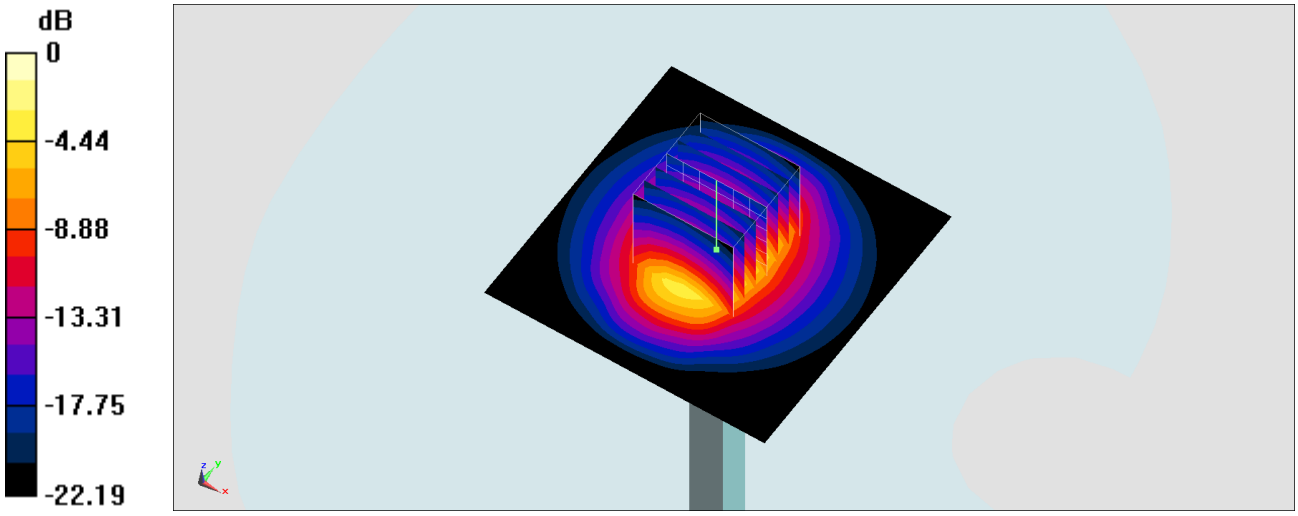

0 dB = 21.5 W/kg = 13.32 dBW/kg

System Check_Head_2450MHz

DUT: D2450V2-736

Communication System: CW ; Frequency: 2450 MHz;Duty Cycle: 1:1
Medium: HSL_2450_180801 Medium parameters used : f = 2450 MHz; σ = 1.753 S/m; ε_r = 39.065; ρ = 1000 kg/m^3
Ambient Temperature：23.5 ℃; Liquid Temperature：22.5 ℃

DASY5 Configuration:
- Probe: EX3DV4 - SN3820; ConvF(6.79, 6.79, 6.79) ; Calibrated: 2018/6/26
- Sensor-Surface: 1.4mm (Mechanical Surface Detection)
- Electronics: DAE4 Sn917; Calibrated: 2017/12/14
- Phantom: SAM_Left; Type: QD000P40CD; Serial: TP:1815
- Measurement SW: DASY52, Version 52.10 (1);SEMCAD X Version 14.6.11 (7439)

Pin=250mW/Area Scan (61x61x1): Interpolated grid: dx=1.200 mm, dy=1.200 mm
Maximum value of SAR (interpolated) = 20.5 W/kg

Pin=250mW/Zoom Scan (7x7x7)/Cube 0: Measurement grid: dx=5mm, dy=5mm, dz=5mm
Reference Value = 104.3 V/m; Power Drift = -0.01 dB
Peak SAR (extrapolated) = 25.3 W/kg
SAR(1 g) = 12.2 W/kg; SAR(10 g) = 5.69 W/kg
Maximum value of SAR (measured) = 20.4 W/kg

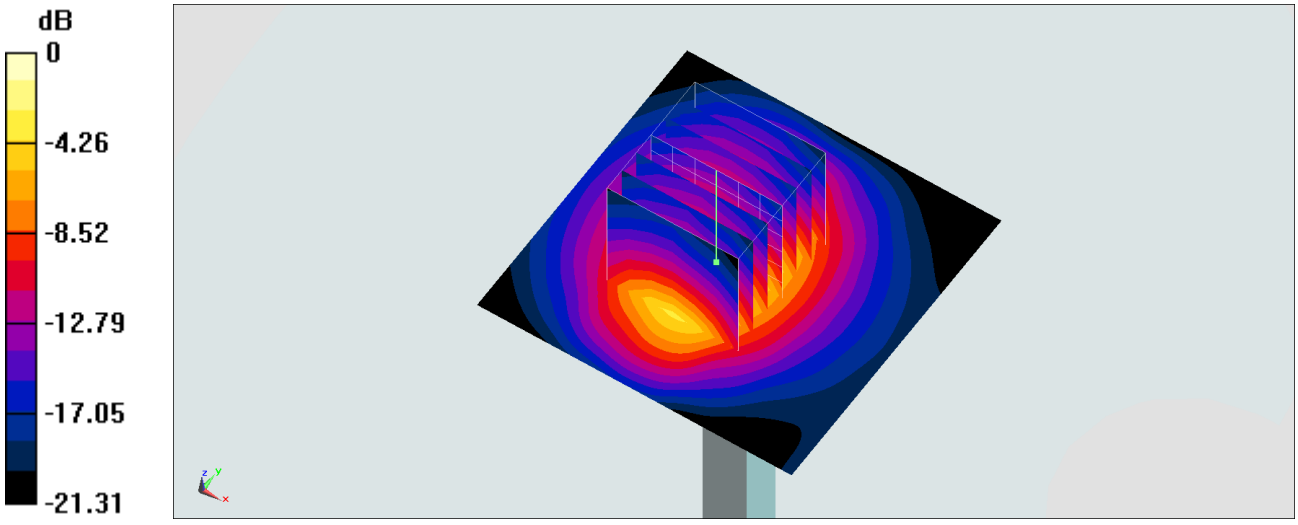

0 dB = 20.4 W/kg = 13.10 dBW/kg

System Check_Body_2450MHz

DUT: D2450V2-736

Communication System: CW; Frequency: 2450 MHz;Duty Cycle: 1:1
Medium: MSL_2450_180603 Medium parameters used: f = 2450 MHz; σ = 1.986 S/m; ε_r = 54.777; ρ = 1000 kg/m^3
Ambient Temperature：23.5 ℃; Liquid Temperature：22.5 ℃

DASY5 Configuration:
- Probe: EX3DV4 - SN7346; ConvF(7.78, 7.78, 7.78); Calibrated: 2018/2/28;
- Sensor-Surface: 1.4mm (Mechanical Surface Detection)
- Electronics: DAE4 Sn1399; Calibrated: 2017/11/16
- Phantom: SAM_Right; Type: QD000P40CD; Serial: 1884
- Measurement SW: DASY52, Version 52.10 (1);SEMCAD X Version 14.6.11 (7437)

Pin=250mW/Area Scan (61x61x1): Interpolated grid: dx=1.200 mm, dy=1.200 mm
Maximum value of SAR (interpolated) = 22.5 W/kg

Pin=250mW/Zoom Scan (7x7x7)/Cube 0: Measurement grid: dx=5mm, dy=5mm, dz=5mm
Reference Value = 110.7 V/m; Power Drift = -0.08 dB
Peak SAR (extrapolated) = 26.9 W/kg
SAR(1 g) = 13.3 W/kg; SAR(10 g) = 6.35 W/kg
Maximum value of SAR (measured) = 21.9 W/kg

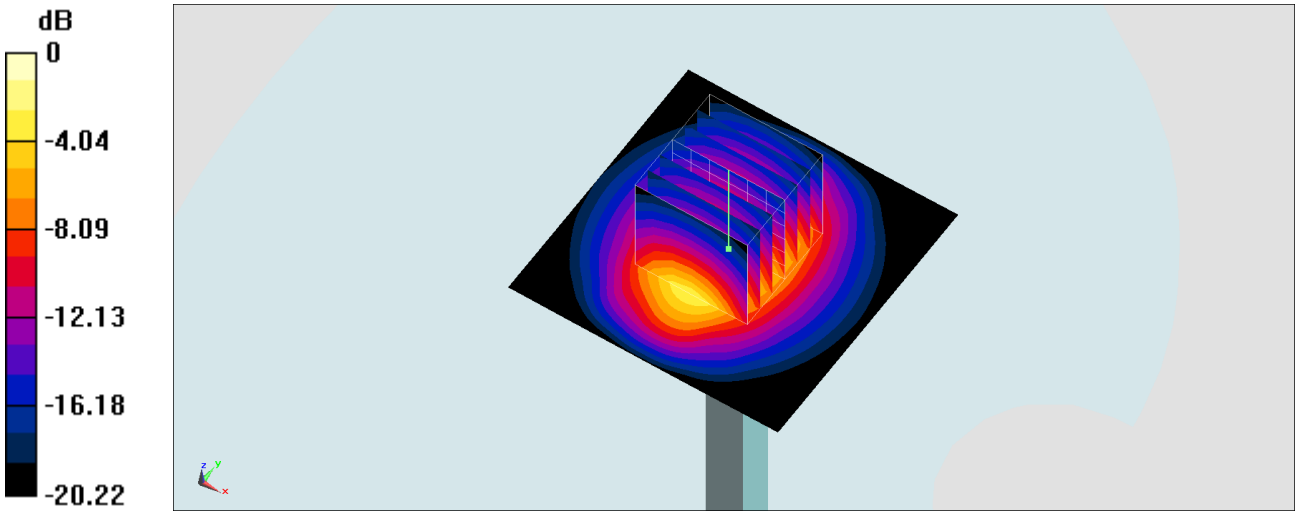

0 dB = 21.9 W/kg = 13.40 dBW/kg

System Check_Body_2450MHz

DUT: D2450V2-736

Communication System: CW; Frequency: 2450 MHz;Duty Cycle: 1:1
Medium: MSL_2450_180802 Medium parameters used: f = 2450 MHz; σ = 1.999 S/m; ε_r = 52.297; ρ = 1000 kg/m^3
Ambient Temperature：23.5 ℃; Liquid Temperature：22.5 ℃

DASY5 Configuration:
- Probe: EX3DV4 - SN3820; ConvF(6.84, 6.84, 6.84); Calibrated: 2018/6/26
- Sensor-Surface: 1.4mm (Mechanical Surface Detection)
- Electronics: DAE4 Sn917; Calibrated: 2017/12/14
- Phantom: SAM_Left; Type: QD000P40CD; Serial: TP:1815
- Measurement SW: DASY52, Version 52.10 (1);SEMCAD X Version 14.6.11 (7439)

Pin=250mW/Area Scan (61x61x1): Interpolated grid: dx=1.200 mm, dy=1.200 mm
Maximum value of SAR (interpolated) = 23.2 W/kg

Pin=250mW/Zoom Scan (7x7x7)/Cube 0: Measurement grid: dx=5mm, dy=5mm, dz=5mm
Reference Value = 111.0 V/m; Power Drift = -0.02 dB
Peak SAR (extrapolated) = 27.5 W/kg
SAR(1 g) = 13.6 W/kg; SAR(10 g) = 6.31 W/kg
Maximum value of SAR (measured) = 22.5 W/kg

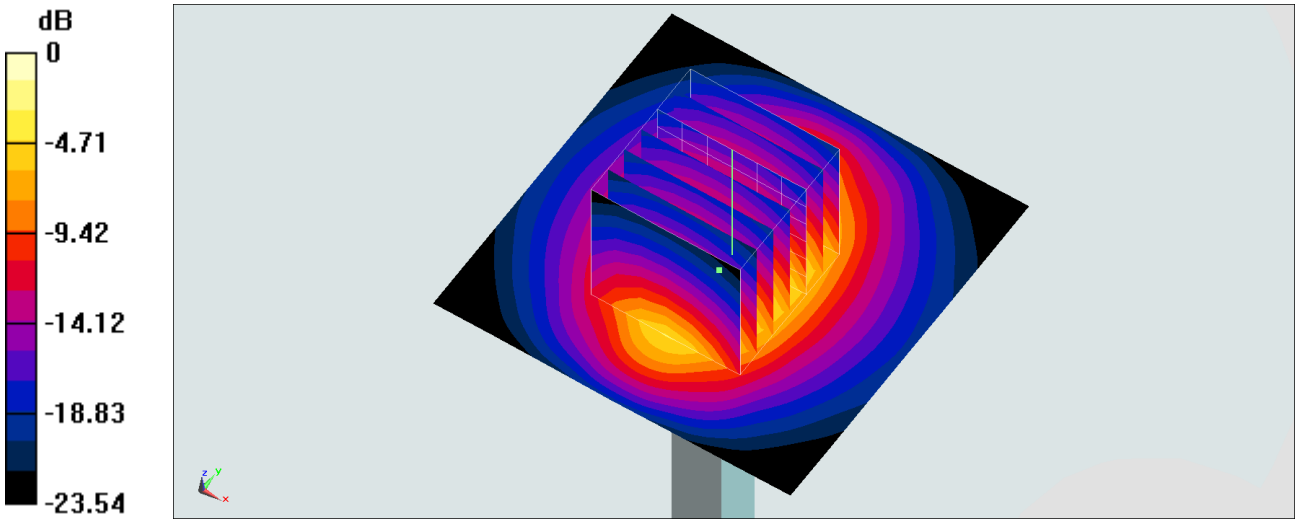

0 dB = 22.5 W/kg = 13.52 dBW/kg

System Check_Head_5250MHz

DUT: D5GHzV2-1006

Communication System: CW; Frequency: 5250 MHz;Duty Cycle: 1:1
Medium: HSL_5G_180604 Medium parameters used: f = 5250 MHz; σ = 4.536 S/m; ε_r = 37.198; ρ = 1000 kg/m^3
Ambient Temperature：23.5 ℃; Liquid Temperature：22.5 ℃

DASY5 Configuration:
- Probe: EX3DV4 - SN3976; ConvF(5.56, 5.56, 5.56); Calibrated: 2018/1/23;
- Sensor-Surface: 1.4mm (Mechanical Surface Detection)
- Electronics: DAE4 Sn1338; Calibrated: 2017/12/4
- Phantom: SAM_Right; Type: QD000P40CD; Serial: 1884
- Measurement SW: DASY52, Version 52.10 (1);SEMCAD X Version 14.6.11 (7437)

Pin=100mW/Area Scan (71x71x1): Interpolated grid: dx=1.000 mm, dy=1.000 mm
Maximum value of SAR (interpolated) = 19.1 W/kg

Pin=100mW/Zoom Scan (7x7x7)/Cube 0: Measurement grid: dx=4mm, dy=4mm, dz=1.4mm
Reference Value = 70.61 V/m; Power Drift = 0.02 dB
Peak SAR (extrapolated) = 33.9 W/kg
SAR(1 g) = 7.85 W/kg; SAR(10 g) = 2.11 W/kg
Maximum value of SAR (measured) = 20.1 W/kg

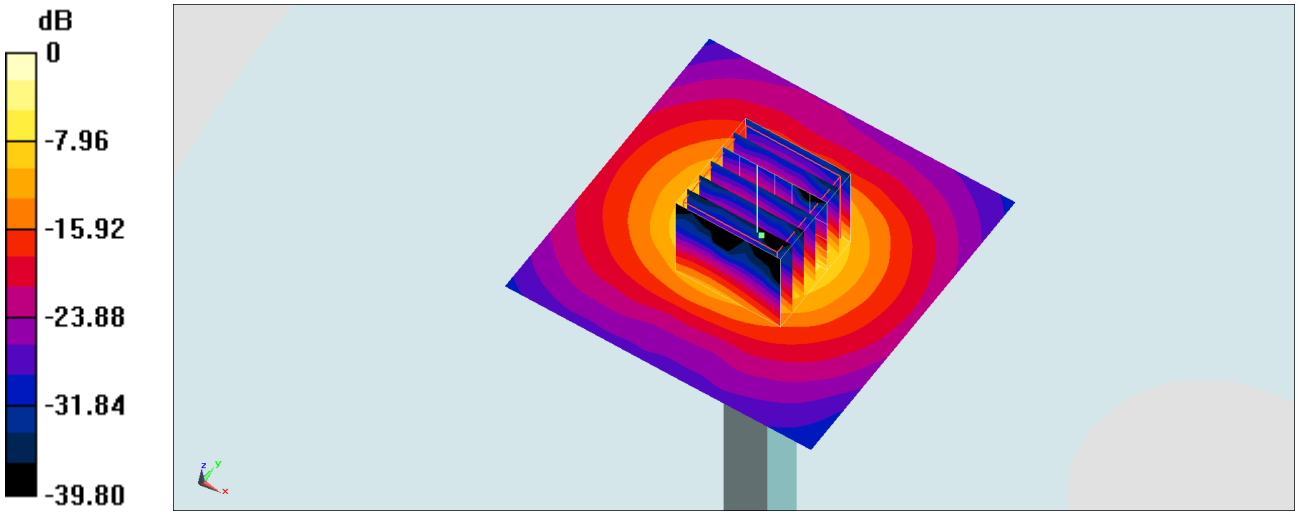

0 dB = 20.1 W/kg = 13.03 dBW/kg

System Check_Body_5250MHz

DUT: D5GHzV2-1006

Communication System: CW; Frequency: 5250 MHz;Duty Cycle: 1:1
Medium: MSL_5G_180602 Medium parameters used: f = 5250 MHz; σ = 5.303 S/m; ε_r = 47.436; ρ = 1000 kg/m^3
Ambient Temperature：23.7 ℃; Liquid Temperature：22.7 ℃

DASY5 Configuration:
- Probe: EX3DV4 - SN3931; ConvF(4.7, 4.7, 4.7); Calibrated: 2017/9/29;
- Sensor-Surface: 1.4mm (Mechanical Surface Detection)
- Electronics: DAE3 Sn360; Calibrated: 2017/11/2
- Phantom: SAM_Right; Type: QD000P40CD; Serial: 1884
- Measurement SW: DASY52, Version 52.10 (1);SEMCAD X Version 14.6.11 (7437)

Pin=100mW/Area Scan (71x71x1): Interpolated grid: dx=1.000 mm, dy=1.000 mm
Maximum value of SAR (interpolated) = 18.9 W/kg

Pin=100mW/Zoom Scan (7x7x7)/Cube 0: Measurement grid: dx=4mm, dy=4mm, dz=1.4mm
Reference Value = 66.74 V/m; Power Drift = -0.03 dB
Peak SAR (extrapolated) = 31.0 W/kg
SAR(1 g) = 7.46 W/kg; SAR(10 g) = 2.02 W/kg
Maximum value of SAR (measured) = 18.1 W/kg

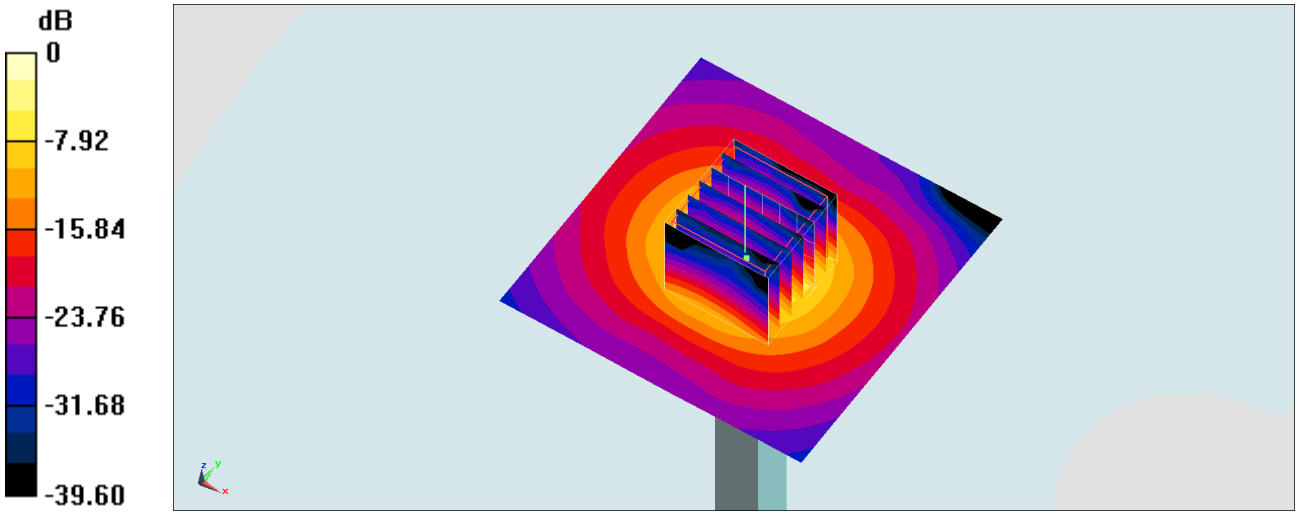

0 dB = 18.1 W/kg = 12.58 dBW/kg

System Check_Body_5250MHz

DUT: D5GHzV2-1006

Communication System: CW; Frequency: 5250 MHz;Duty Cycle: 1:1
Medium: MSL_5G_180605 Medium parameters used : f = 5250 MHz; σ = 5.547 S/m; ε_r = 47.196; ρ = 1000 kg/m^3
Ambient Temperature：23.7 ℃; Liquid Temperature：22.7 ℃

DASY5 Configuration:
- Probe: EX3DV4 - SN3976; ConvF(4.92, 4.92, 4.92); Calibrated: 2018/1/23;
- Sensor-Surface: 1.4mm (Mechanical Surface Detection)
- Electronics: DAE4 Sn1338; Calibrated: 2017/12/4
- Phantom: SAM_Right; Type: QD000P40CD; Serial: 1884
- Measurement SW: DASY52, Version 52.10 (1);SEMCAD X Version 14.6.11 (7437)

Pin=100mW/Area Scan (71x71x1): Interpolated grid: dx=1.000 mm, dy=1.000 mm
Maximum value of SAR (interpolated) = 19.3 W/kg

Pin=100mW/Zoom Scan (7x7x7)/Cube 0: Measurement grid: dx=4mm, dy=4mm, dz=1.4mm
Reference Value = 64.15 V/m; Power Drift = -0.03 dB
Peak SAR (extrapolated) = 33.3 W/kg
SAR(1 g) = 7.64 W/kg; SAR(10 g) = 2.06 W/kg
Maximum value of SAR (measured) = 18.9 W/kg

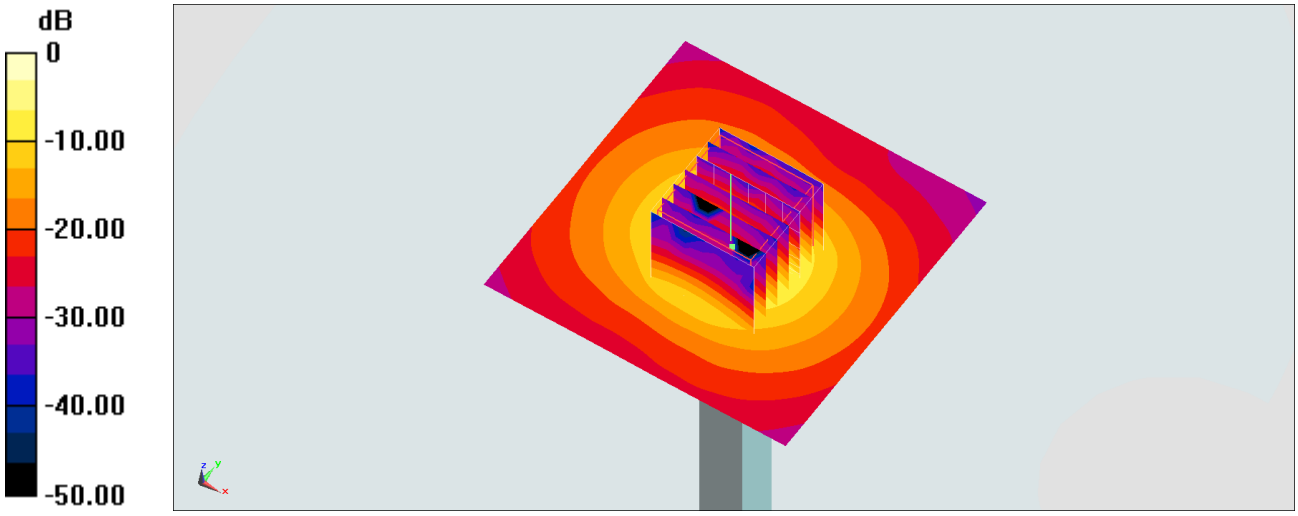

0 dB = 18.9 W/kg = 12.76 dBW/kg

System Check_Head_5300MHz

DUT: D5GHzV2-1040

Communication System: CW; Frequency: 5300 MHz;Duty Cycle: 1:1
Medium: HSL_5G_180801 Medium parameters used : f = 5300 MHz; σ = 4.635 S/m; ε_r = 36.641; ρ = 1000 kg/m^3
Ambient Temperature：23.5 ℃; Liquid Temperature：22.5 ℃

DASY5 Configuration:
- Probe: EX3DV4 - SN3820; ConvF(4.6, 4.6, 4.6) ; Calibrated: 2018/6/26
- Sensor-Surface: 1.4mm (Mechanical Surface Detection)
- Electronics: DAE4 Sn917; Calibrated: 2017/12/14
- Phantom: SAM_Left; Type: QD000P40CD; Serial: TP:1815
- Measurement SW: DASY52, Version 52.10 (1);SEMCAD X Version 14.6.11 (7439)

Pin=100mW/Area Scan (71x71x1): Interpolated grid: dx=1.000 mm, dy=1.000 mm
Maximum value of SAR (interpolated) = 18.3 W/kg

Pin=100mW/Zoom Scan (7x7x7)/Cube 0: Measurement grid: dx=4mm, dy=4mm, dz=1.4mm
Reference Value = 66.64 V/m; Power Drift = -0.01 dB
Peak SAR (extrapolated) = 30.5 W/kg
SAR(1 g) = 8.07 W/kg; SAR(10 g) = 2.43 W/kg
Maximum value of SAR (measured) = 18.6 W/kg

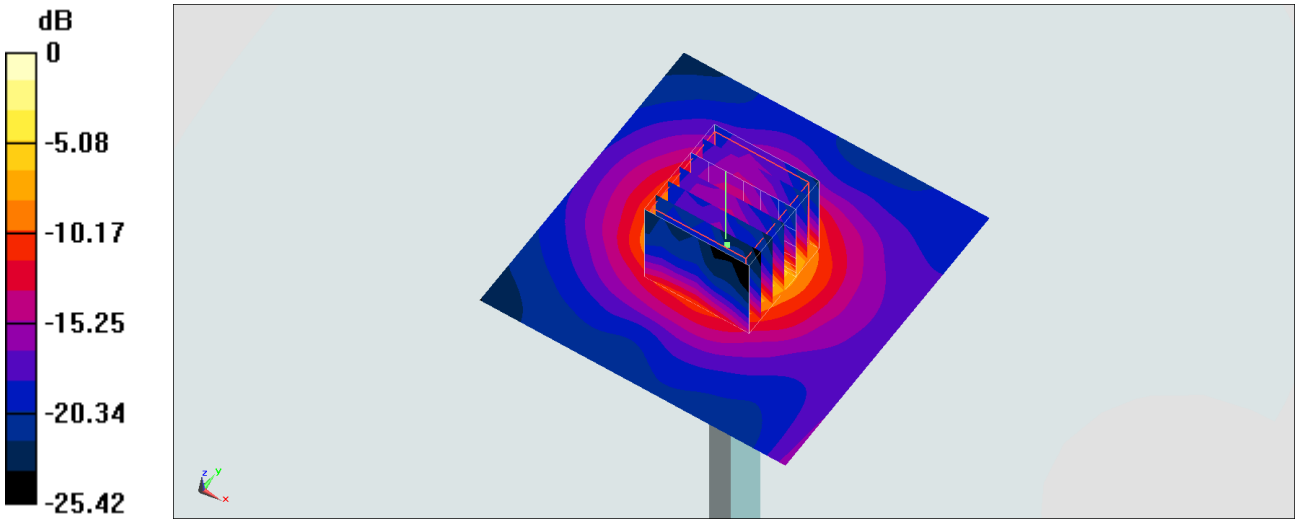

0 dB = 18.6 W/kg = 12.70 dBW/kg

System Check_Body_5300MHz

DUT: D5GHzV2-1040

Communication System: CW; Frequency: 5300 MHz;Duty Cycle: 1:1
Medium: MSL_5G_180802 Medium parameters used: f = 5300 MHz; σ = 5.584 S/m; ε_r = 49.138; ρ = 1000 kg/m^3
Ambient Temperature：23.5 ℃; Liquid Temperature：22.5 ℃

DASY5 Configuration:
- Probe: EX3DV4 - SN3820; ConvF(4.23, 4.23, 4.23); Calibrated: 2018/6/26
- Sensor-Surface: 1.4mm (Mechanical Surface Detection)
- Electronics: DAE4 Sn917; Calibrated: 2017/12/14
- Phantom: SAM_Left; Type: QD000P40CD; Serial: TP:1815
- Measurement SW: DASY52, Version 52.10 (1);SEMCAD X Version 14.6.11 (7439)

Pin=100mW/Area Scan (71x71x1): Interpolated grid: dx=1.000 mm, dy=1.000 mm
Maximum value of SAR (interpolated) = 19.4 W/kg

Pin=100mW/Zoom Scan (7x7x7)/Cube 0: Measurement grid: dx=4mm, dy=4mm, dz=1.4mm
Reference Value = 45.69 V/m; Power Drift = 0.05 dB
Peak SAR (extrapolated) = 35.7 W/kg
SAR(1 g) = 7.49 W/kg; SAR(10 g) = 2.03 W/kg
Maximum value of SAR (measured) = 19.1 W/kg

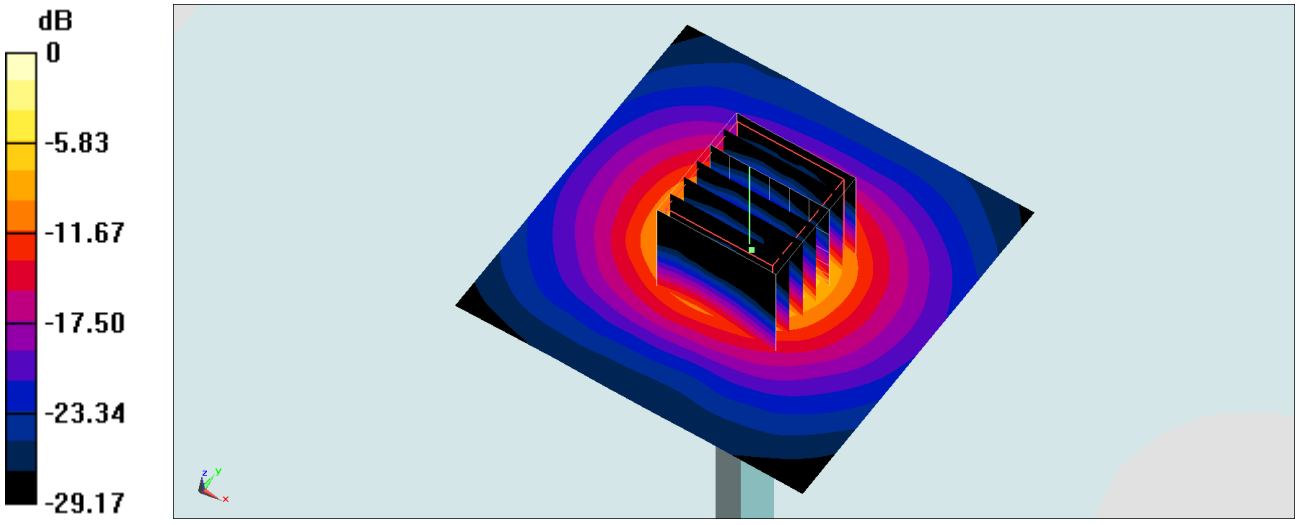

0 dB = 19.1 W/kg = 12.81 dBW/kg

System Check_Head_5600MHz

DUT: D5GHzV2-1006

Communication System: CW; Frequency: 5600 MHz;Duty Cycle: 1:1
Medium: HSL_5G_180604 Medium parameters used: f = 5600 MHz; σ = 4.9 S/m; ε_r = 36.691; ρ = 1000 kg/m^3
Ambient Temperature：23.5 ℃; Liquid Temperature：22.5 ℃

DASY5 Configuration:
- Probe: EX3DV4 - SN3976; ConvF(4.97, 4.97, 4.97); Calibrated: 2018/1/23;
- Sensor-Surface: 1.4mm (Mechanical Surface Detection)
- Electronics: DAE4 Sn1338; Calibrated: 2017/12/4
- Phantom: SAM_Right; Type: QD000P40CD; Serial: 1884
- Measurement SW: DASY52, Version 52.10 (1);SEMCAD X Version 14.6.11 (7437)

Pin=100mW/Area Scan (71x71x1): Interpolated grid: dx=1.000 mm, dy=1.000 mm
Maximum value of SAR (interpolated) = 21.7 W/kg

Pin=100mW/Zoom Scan (7x7x7)/Cube 0: Measurement grid: dx=4mm, dy=4mm, dz=1.4mm
Reference Value = 66.28 V/m; Power Drift = 0.14 dB
Peak SAR (extrapolated) = 37.1 W/kg
SAR(1 g) = 8.88 W/kg; SAR(10 g) = 2.35 W/kg
Maximum value of SAR (measured) = 22.7 W/kg

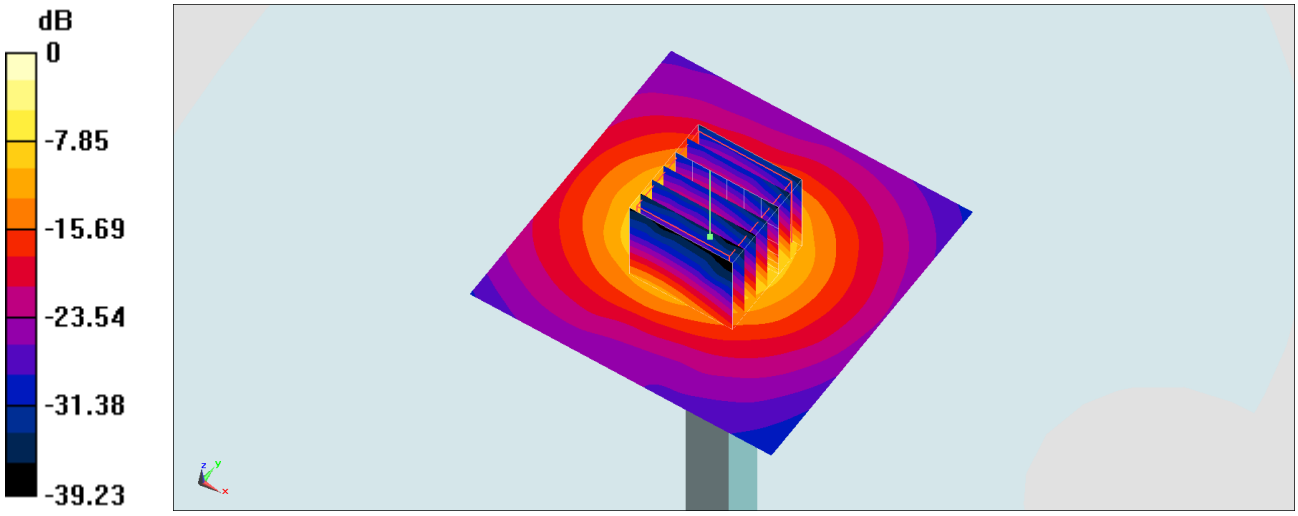

0 dB = 22.7 W/kg = 13.56 dBW/kg

System Check_Head_5600MHz

DUT: D5GHzV2-1040

Communication System: CW; Frequency: 5600 MHz;Duty Cycle: 1:1
Medium: HSL_5G_180801 Medium parameters used: f = 5600 MHz; σ = 4.935 S/m; ε_r = 36.261; ρ = 1000 kg/m^3
Ambient Temperature：23.5 ℃; Liquid Temperature：22.5 ℃

DASY5 Configuration:
- Probe: EX3DV4 - SN3820; ConvF(4.5, 4.5, 4.5) ; Calibrated: 2018/6/26
- Sensor-Surface: 1.4mm (Mechanical Surface Detection)
- Electronics: DAE4 Sn917; Calibrated: 2017/12/14
- Phantom: SAM_Left; Type: QD000P40CD; Serial: TP:1815
- Measurement SW: DASY52, Version 52.10 (1);SEMCAD X Version 14.6.11 (7439)

Pin=100mW/Area Scan (71x71x1): Interpolated grid: dx=1.000 mm, dy=1.000 mm
Maximum value of SAR (interpolated) = 17.8 W/kg

Pin=100mW/Zoom Scan (7x7x7)/Cube 0: Measurement grid: dx=4mm, dy=4mm, dz=1.4mm
Reference Value = 65.16 V/m; Power Drift = 0.08 dB
Peak SAR (extrapolated) = 31.9 W/kg
SAR(1 g) = 7.88 W/kg; SAR(10 g) = 2.51 W/kg
Maximum value of SAR (measured) = 18.2 W/kg

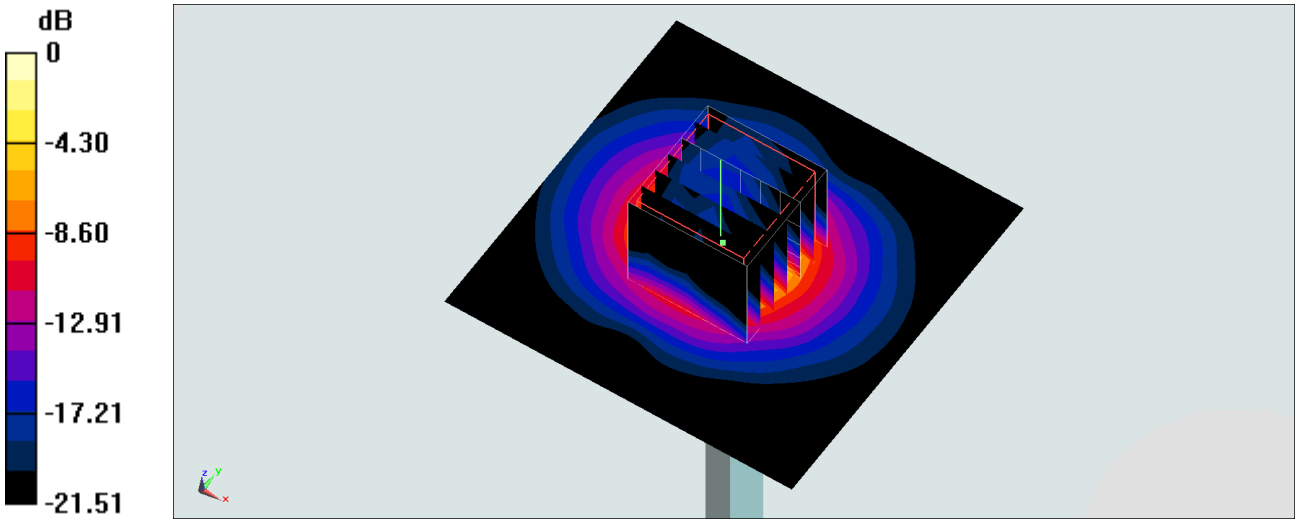

0 dB = 18.2 W/kg = 12.60 dBW/kg

System Check_Body_5600MHz

DUT: D5GHzV2-1006

Communication System: CW; Frequency: 5600 MHz;Duty Cycle: 1:1
Medium: MSL_5G_180602 Medium parameters used: f = 5600 MHz; σ = 5.744 S/m; ε_r = 46.845; ρ = 1000 kg/m^3
Ambient Temperature：23.7 ℃; Liquid Temperature：22.7 ℃

DASY5 Configuration:
- Probe: EX3DV4 - SN3931; ConvF(3.99, 3.99, 3.99); Calibrated: 2017/9/29;
- Sensor-Surface: 1.4mm (Mechanical Surface Detection)
- Electronics: DAE3 Sn360; Calibrated: 2017/11/2
- Phantom: SAM_Right; Type: QD000P40CD; Serial: 1884
- Measurement SW: DASY52, Version 52.10 (1);SEMCAD X Version 14.6.11 (7437)

Pin=100mW/Area Scan (71x71x1): Interpolated grid: dx=1.000 mm, dy=1.000 mm
Maximum value of SAR (interpolated) = 19.6 W/kg

Pin=100mW/Zoom Scan (7x7x7)/Cube 0: Measurement grid: dx=4mm, dy=4mm, dz=1.4mm
Reference Value = 67.34 V/m; Power Drift = 0.02 dB
Peak SAR (extrapolated) = 37.8 W/kg
SAR(1 g) = 7.97 W/kg; SAR(10 g) = 2.19 W/kg
Maximum value of SAR (measured) = 21.4 W/kg

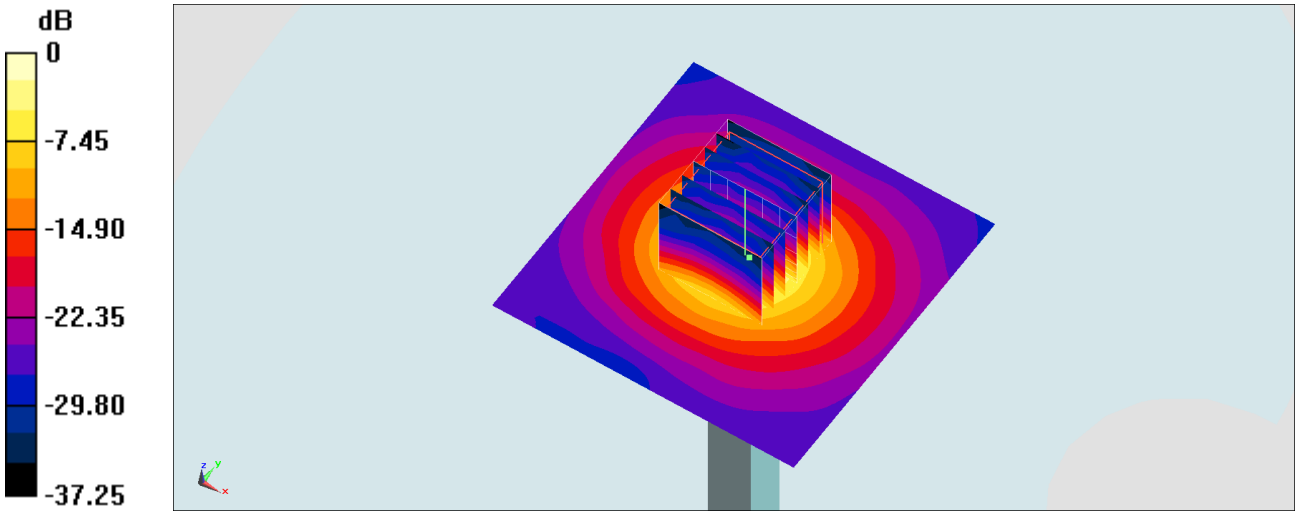

0 dB = 21.4 W/kg = 13.30 dBW/kg

System Check_Body_5600MHz

DUT: D5GHzV2-1040

Communication System: CW; Frequency: 5600 MHz;Duty Cycle: 1:1
Medium: MSL_5G_180802 Medium parameters used: f = 5600 MHz; σ = 5.973 S/m; ε_r = 48.62; ρ = 1000 kg/m^3
Ambient Temperature：23.5 ℃; Liquid Temperature：22.5 ℃

DASY5 Configuration:
- Probe: EX3DV4 - SN3820; ConvF(3.84, 3.84, 3.84); Calibrated: 2018/6/26
- Sensor-Surface: 1.4mm (Mechanical Surface Detection)
- Electronics: DAE4 Sn917; Calibrated: 2017/12/14
- Phantom: SAM_Left; Type: QD000P40CD; Serial: TP:1815
- Measurement SW: DASY52, Version 52.10 (1);SEMCAD X Version 14.6.11 (7439)

Pin=100mW/Area Scan (71x71x1): Interpolated grid: dx=1.000 mm, dy=1.000 mm
Maximum value of SAR (interpolated) = 19.3 W/kg

Pin=100mW/Zoom Scan (7x7x7)/Cube 0: Measurement grid: dx=4mm, dy=4mm, dz=1.4mm
Reference Value = 65.38 V/m; Power Drift = -0.12 dB
Peak SAR (extrapolated) = 29.3 W/kg
SAR(1 g) = 7.67 W/kg; SAR(10 g) = 2.13 W/kg
Maximum value of SAR (measured) = 17.8 W/kg

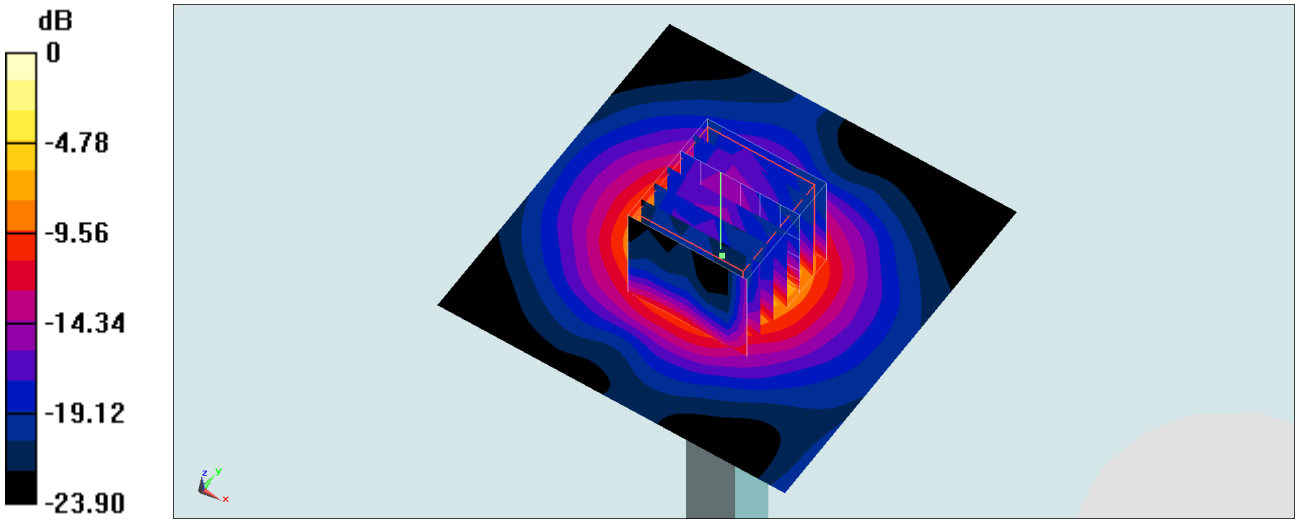

0 dB = 17.8 W/kg = 12.50 dBW/kg

System Check_Head_5750MHz

DUT: D5GHzV2-1006

Communication System: CW; Frequency: 5750 MHz;Duty Cycle: 1:1
Medium: HSL_5G_180604 Medium parameters used: f = 5750 MHz; σ = 5.065 S/m; ε_r = 36.487; ρ = 1000 kg/m^3
Ambient Temperature：23.5 ℃; Liquid Temperature：22.5 ℃

DASY5 Configuration:
- Probe: EX3DV4 - SN3976; ConvF(5.04, 5.04, 5.04); Calibrated: 2018/1/23;
- Sensor-Surface: 1.4mm (Mechanical Surface Detection)
- Electronics: DAE4 Sn1338; Calibrated: 2017/12/4
- Phantom: SAM_Right; Type: QD000P40CD; Serial: 1884
- Measurement SW: DASY52, Version 52.10 (1);SEMCAD X Version 14.6.11 (7437)

Pin=100mW/Area Scan (71x71x1): Interpolated grid: dx=1.000 mm, dy=1.000 mm
Maximum value of SAR (interpolated) = 19.2 W/kg

Pin=100mW/Zoom Scan (7x7x7)/Cube 0: Measurement grid: dx=4mm, dy=4mm, dz=1.4mm
Reference Value = 61.89 V/m; Power Drift = 0.02 dB
Peak SAR (extrapolated) = 35.6 W/kg
SAR(1 g) = 7.55 W/kg; SAR(10 g) = 2.1 W/kg
Maximum value of SAR (measured) = 19.1 W/kg

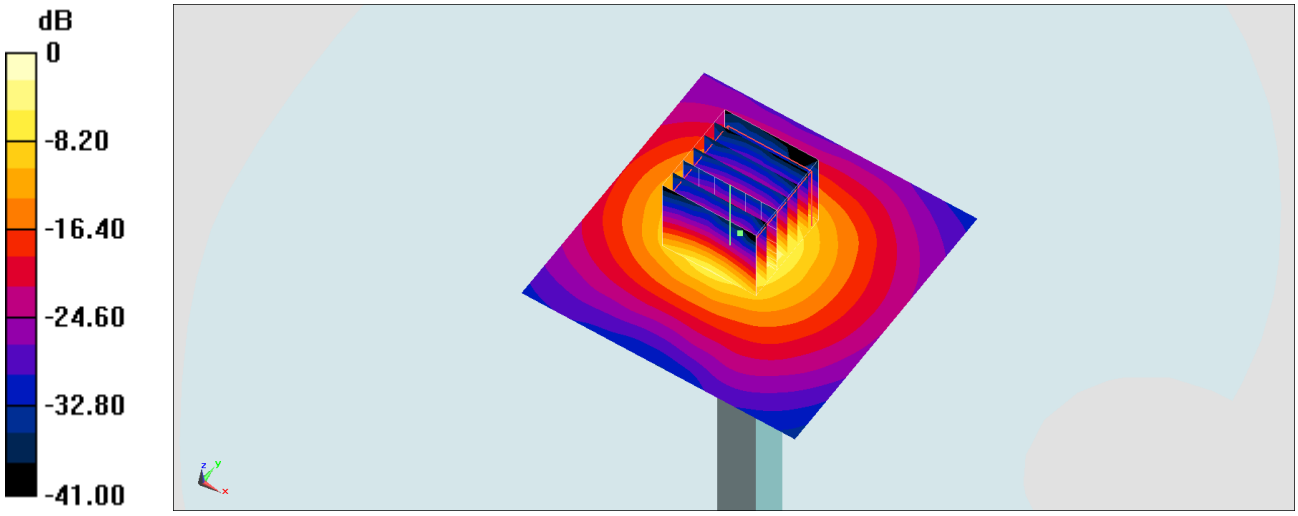

0 dB = 19.1 W/kg = 12.81 dBW/kg

System Check_Body_5750MHz

DUT: D5GHzV2-1006

Communication System: CW; Frequency: 5750 MHz;Duty Cycle: 1:1
Medium: MSL_5G_180602 Medium parameters used: f = 5750 MHz; σ = 5.944 S/m; ε_r = 46.578; ρ = 1000 kg/m^3
Ambient Temperature：23.7 ℃; Liquid Temperature：22.7 ℃

DASY5 Configuration:
- Probe: EX3DV4 - SN3931; ConvF(4.32, 4.32, 4.32); Calibrated: 2017/9/29;
- Sensor-Surface: 1.4mm (Mechanical Surface Detection)
- Electronics: DAE3 Sn360; Calibrated: 2017/11/2
- Phantom: SAM_Right; Type: QD000P40CD; Serial: 1884
- Measurement SW: DASY52, Version 52.10 (1);SEMCAD X Version 14.6.11 (7437)

Pin=100mW/Area Scan (71x71x1): Interpolated grid: dx=1.000 mm, dy=1.000 mm
Maximum value of SAR (interpolated) = 18.2 W/kg

Pin=100mW/Zoom Scan (7x7x7)/Cube 0: Measurement grid: dx=4mm, dy=4mm, dz=1.4mm
Reference Value = 63.66 V/m; Power Drift = -0.04 dB
Peak SAR (extrapolated) = 34.8 W/kg
SAR(1 g) = 7.26 W/kg; SAR(10 g) = 2.01 W/kg
Maximum value of SAR (measured) = 18.8 W/kg

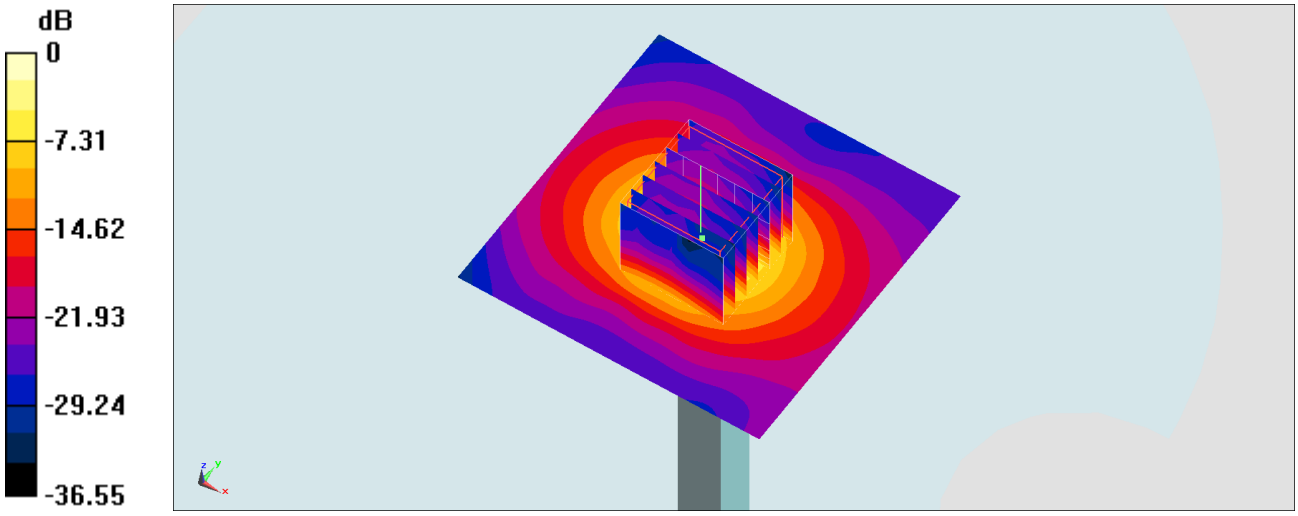

0 dB = 18.8 W/kg = 12.74 dBW/kg

System Check_Body_5750MHz

DUT: D5GHzV2-1006

Communication System: CW; Frequency: 5750 MHz;Duty Cycle: 1:1
Medium: MSL_5G_180605 Medium parameters used: f = 5750 MHz; σ = 6.216 S/m; ε_r = 46.377; ρ = 1000 kg/m^3
Ambient Temperature：23.7 ℃; Liquid Temperature：22.7 ℃

DASY5 Configuration:
- Probe: EX3DV4 - SN3976; ConvF(4.46, 4.46, 4.46); Calibrated: 2018/1/23;
- Sensor-Surface: 1.4mm (Mechanical Surface Detection)
- Electronics: DAE4 Sn1338; Calibrated: 2017/12/4
- Phantom: SAM_Right; Type: QD000P40CD; Serial: 1884
- Measurement SW: DASY52, Version 52.10 (1);SEMCAD X Version 14.6.11 (7437)

Pin=100mW/Area Scan (71x71x1): Interpolated grid: dx=1.000 mm, dy=1.000 mm
Maximum value of SAR (interpolated) = 19.1 W/kg

Pin=100mW/Zoom Scan (7x7x7)/Cube 0: Measurement grid: dx=4mm, dy=4mm, dz=1.4mm
Reference Value = 62.10 V/m; Power Drift = 0.02 dB
Peak SAR (extrapolated) = 35.7 W/kg
SAR(1 g) = 7.33 W/kg; SAR(10 g) = 1.96 W/kg
Maximum value of SAR (measured) = 19.0 W/kg

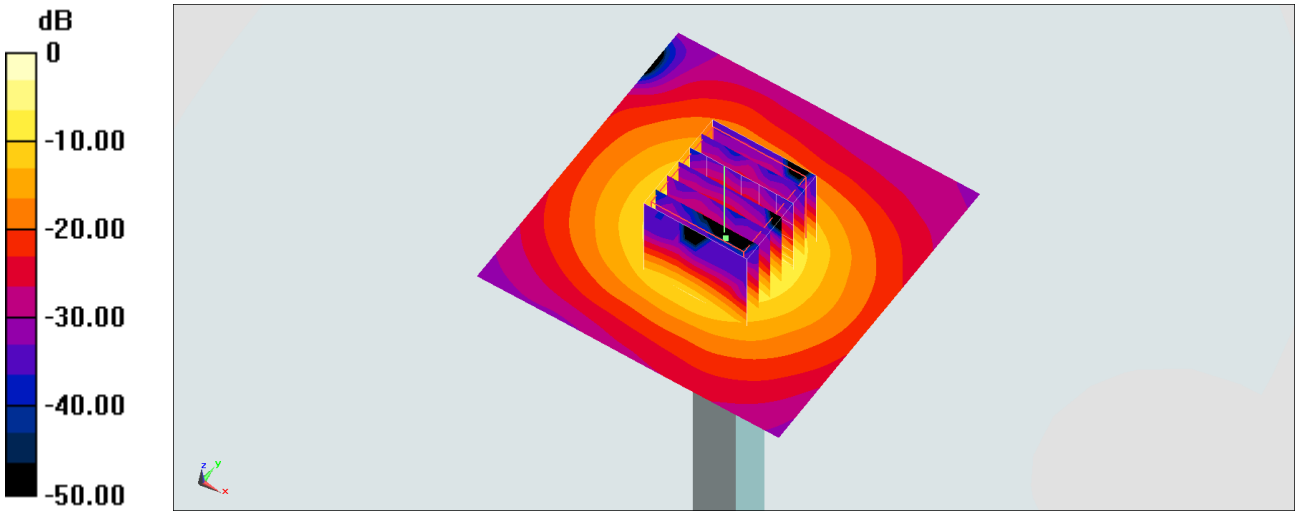

0 dB = 19.0 W/kg = 12.79 dBW/kg

System Check_Head_5800MHz

DUT: D5GHzV2-1040

Communication System: CW ; Frequency: 5800 MHz;Duty Cycle: 1:1
Medium: HSL_5G_180801 Medium parameters used: f = 5800 MHz; σ = 5.15 S/m; ε_r = 36.019; ρ = 1000 kg/m^3
Ambient Temperature：23.5 ℃; Liquid Temperature：22.5 ℃

DASY5 Configuration:
- Probe: EX3DV4 - SN3820; ConvF(4.53, 4.53, 4.53) ; Calibrated: 2018/6/26
- Sensor-Surface: 1.4mm (Mechanical Surface Detection)
- Electronics: DAE4 Sn917; Calibrated: 2017/12/14
- Phantom: SAM_Left; Type: QD000P40CD; Serial: TP:1815
- Measurement SW: DASY52, Version 52.10 (1);SEMCAD X Version 14.6.11 (7439)

Pin=100mW/Area Scan (71x71x1): Interpolated grid: dx=1.000 mm, dy=1.000 mm
Maximum value of SAR (interpolated) = 20.7 W/kg

Pin=100mW/Zoom Scan (7x7x7)/Cube 0: Measurement grid: dx=4mm, dy=4mm, dz=1.4mm
Reference Value = 71.17 V/m; Power Drift = 0.17 dB
Peak SAR (extrapolated) = 35.2 W/kg
SAR(1 g) = 8.58 W/kg; SAR(10 g) = 2.3 W/kg
Maximum value of SAR (measured) = 20.1 W/kg

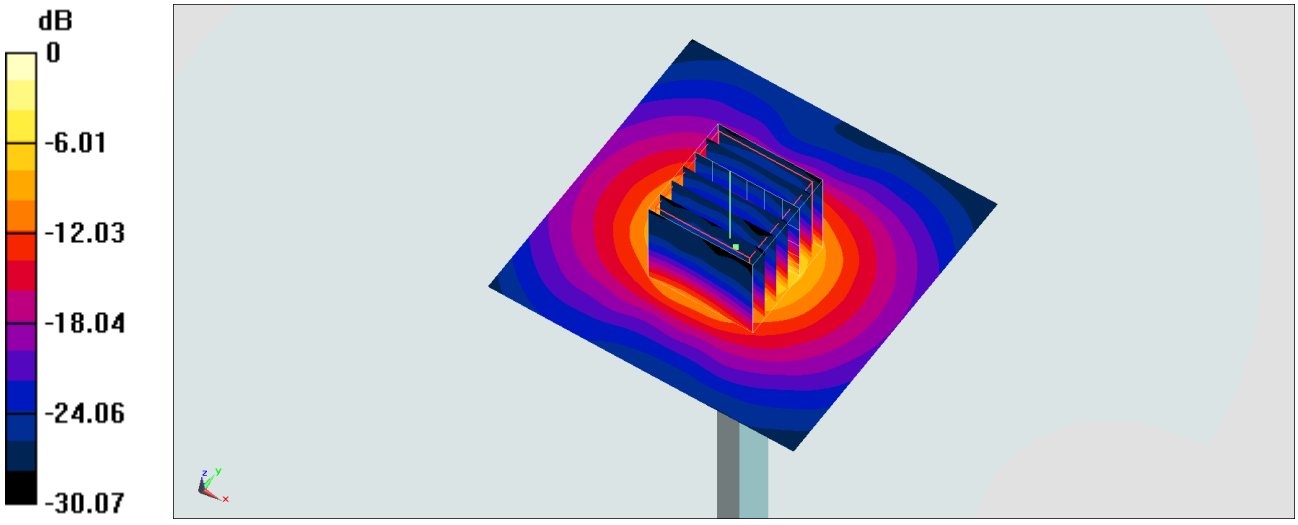

0 dB = 20.1 W/kg = 13.03 dBW/kg

System Check_Body_5800MHz

DUT: D5GHzV2-1040

Communication System: CW; Frequency: 5800 MHz;Duty Cycle: 1:1
Medium: MSL_5G_180802 Medium parameters used: f = 5800 MHz; σ = 6.252 S/m; ε_r = 48.31; ρ = 1000 kg/m^3
Ambient Temperature：23.5 ℃; Liquid Temperature：22.5 ℃

DASY5 Configuration:
- Probe: EX3DV4 - SN3820; ConvF(3.94, 3.94, 3.94); Calibrated: 2018/6/26
- Sensor-Surface: 1.4mm (Mechanical Surface Detection)
- Electronics: DAE4 Sn917; Calibrated: 2017/12/14
- Phantom: SAM_Left; Type: QD000P40CD; Serial: TP:1815
- Measurement SW: DASY52, Version 52.10 (1);SEMCAD X Version 14.6.11 (7439)

Pin=100mW/Area Scan (71x71x1): Interpolated grid: dx=1.000 mm, dy=1.000 mm
Maximum value of SAR (interpolated) = 16.3 W/kg

Pin=100mW/Zoom Scan (7x7x7)/Cube 0: Measurement grid: dx=4mm, dy=4mm, dz=1.4mm
Reference Value = 59.67 V/m; Power Drift = -0.02 dB
Peak SAR (extrapolated) = 29.0 W/kg
SAR(1 g) = 7.33 W/kg; SAR(10 g) = 2.01 W/kg
Maximum value of SAR (measured) = 16.9 W/kg

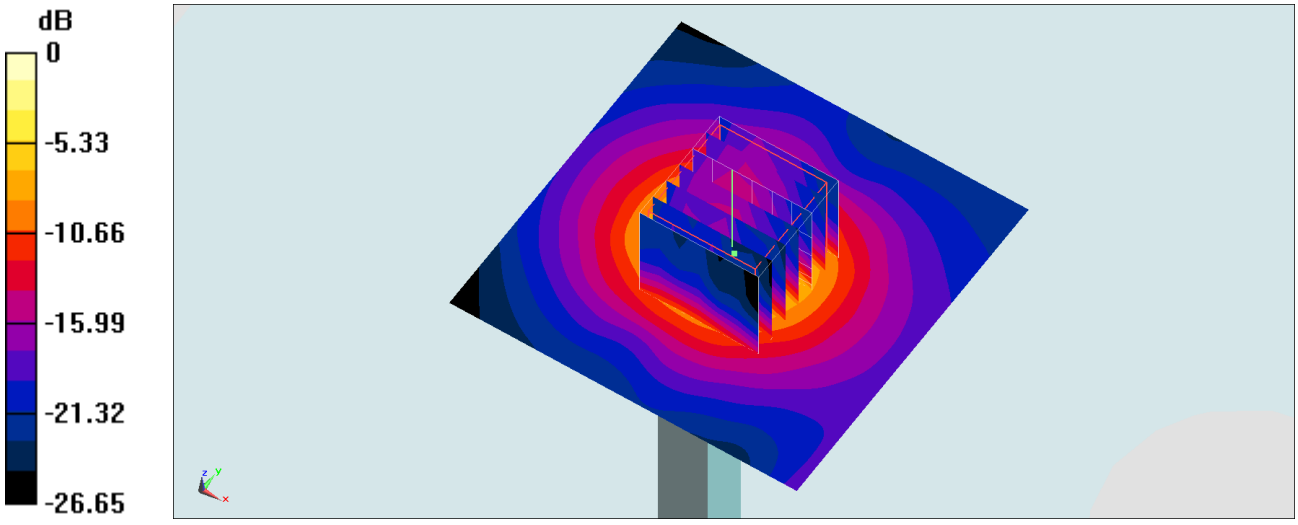

0 dB = 16.9 W/kg = 12.28 dBW/kg