N630
User Manual

Revision: R00 (October 2019)

Trademark
All brand and product names are trademarks or registered trademarks of their respective companies.

Disclaimer
Specifications and documents are subject to change without notice.

Note
Not all models are available in all regions. Not all features are available on all models.
Depending on the specific model purchased, the colour and look of your device and accessories may not exactly match the graphics shown in this document. The screenshots and other presentations shown in this document are for reference only.

Table of Contents

Device Basics 4
- Getting to Know Your Device 4
- Installing and Charging the Battery Pack 4
- Using a Micro-SIM Card 6
- Using a Memory Card 6
- Turning the Device On and Off 7
  - Turning On 7
  - Sleep Mode 7
  - Aeroplane Mode 8
  - Restarting the Device 8
  - Turning Off 8
  - Shutting Down 8

Getting Started 9
- Using the Touch Screen 9
- Home Screen 10
- Your Apps 10

Customising Your Device 11
- Cellular Data Connection 11
- Wireless Network Connection 11
  - Connecting to a Wireless Network 11
  - Removing a Remembered Network 12
- Bluetooth 12
  - Pairing with Another Bluetooth Device 12
  - Disconnecting a Bluetooth Connection 12

Reference 13
- Caring for the Device 13
- Regulatory Information 13
  - FCC 14
  - IC 14
  - CE 15
  - RF Exposure Information (SAR) 16
  - WEEE 16
  - Bluetooth 16
- Safety Precautions 16
  - About Charging 16
  - About the Charger 17
  - About the Battery 17

Device Basics

Getting to Know Your Device

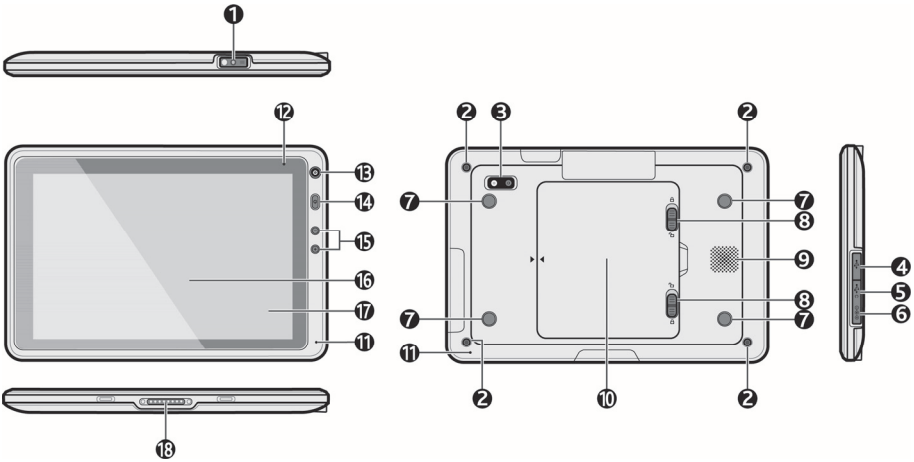

❶	Barcode reader	❿	Battery cover
❷	Accessory screw hole	⓫	Microphone
❸	Rear camera lens and flash LED	⓬	Charge indicator
❹	USB Type A port	⓭	Front camera lens
❺	USB Type C connector	⓮	Power button*
❻	Power jack	⓯	Volume buttons
❼	VESA mounting hole	⓰	Touch screen
❽	Battery cover latch	⓱	NFC sensor
❾	Speaker	⓲	Dock connector

*Depending on the model, this button may be barcode reader button.

ⓘ Depending on the model, the power button of your device may be located on the top side of the device instead.

Installing and Charging the Battery Pack

The battery pack is the internal power source for the device. It is rechargeable using the AC charger.

To install the battery pack, follow these steps:

1. Carefully place the device upside down.
2. Slide both battery cover latches towards the unlock ( ) position (❶).
3. Lift up the battery cover from the opening and take it off the device (❷).

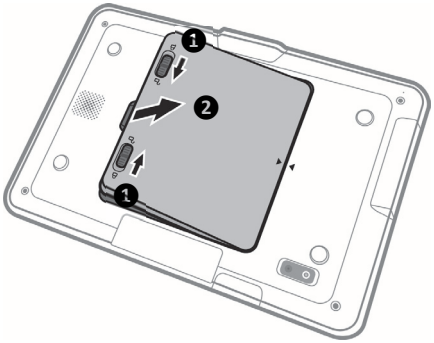

4. Install the connector side of the battery pack into the battery compartment first (❸), and then place the other side of the battery pack into the compartment (❹).

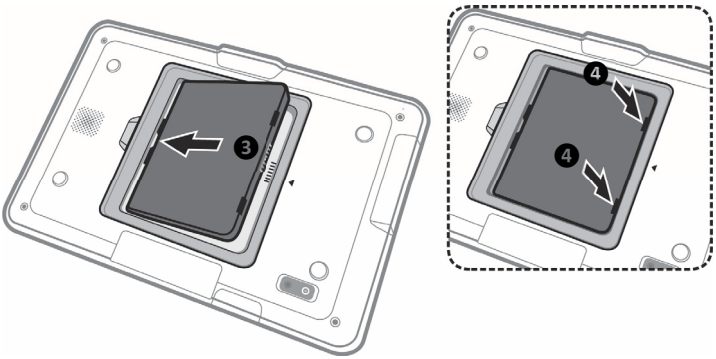

5. Align the triangular mark on the battery cover with the triangular mark on the device (❺), and then close the battery cover properly (❻).

   When closing the battery cover, make sure that the cover fits properly on all corners so that the O-ring is seated properly into the groove to achieve waterproof performance.

   While holding down the battery cover, slide both battery cover latches towards the lock (🔒) position (❼).

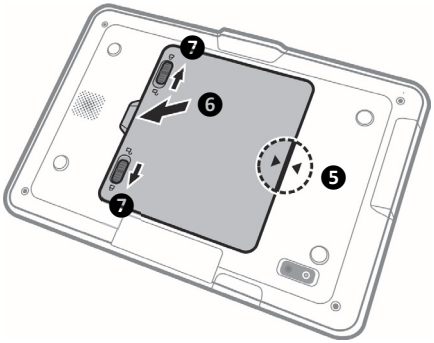

6. To charge the battery pack, connect the AC charger to the device and an electrical outlet.

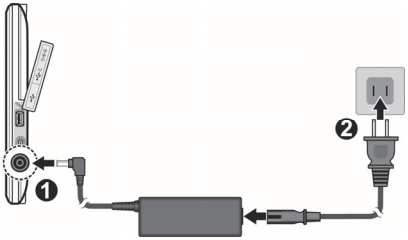

Using a Micro-SIM Card

Depending on the model, your device may use a Micro-SIM card.

1. Remove the battery cover. (Follow the steps in the “Installing and Charging the Battery Pack” section.)
2. Remove the battery pack out of the battery compartment.
3. Locate the Micro-SIM card slot (as shown in the illustration). With its label side facing the front side of the device, hold the Micro-SIM card by the edges and gently insert it into the slot.

   To remove the card, gently push the top edge of the card inwards to release it, and pull it out of the slot.

4. Replace the battery pack and the battery cover. (Follow the steps in the “Installing and Charging the Battery Pack” section.)

ⓘ Inserting the card in the reverse direction may cause damage.

Using a Memory Card

1. Remove the battery cover. (Follow the steps in the “Installing and Charging the Battery Pack” section.)
2. Remove the battery pack out of the battery compartment.
3. Locate the MicroSD card slot (as shown in the illustration). With its label side facing the front side of the device, hold the MicroSD card by the edges and gently insert it into the slot.

To remove the card, first unmount it from the device:

A. Slide up from the bottom of the Home screen and tap **Settings**.

B. Tap **Storage** → ⏏..

C. Then gently push the top edge of the card inwards to release it, and pull it out of the slot.

4. Replace the battery pack and the battery cover. (Follow the steps in the “Installing and Charging the Battery Pack” section.)

ⓘ Do not apply pressure to the center of the memory card.

ⓘ Inserting the card in the reverse direction may cause damage.

ⓘ The manufacturer does not guarantee the product's compatibilities with the storage cards from all manufacturers.

ⓘ If you encounter access problems with your memory card, please visit the website https://www.sdcard.org/downloads/formatter_4/ and use the "SD Memory Card Formatter 5.0 for SD/SDHC/SDXC" tool to format your memory card.

Turning the Device On and Off

Turning On

1. Press and hold the Power button for about 2 seconds to turn on your device. Wait for the boot screen to display.

   ⓘ The battery may not be fully charged when you use the device for the first time. Charge the battery first.

2. The Home screen will display and the device is in Lock mode by default. Drag the Lock icon (🔒) upwards to unlock. The device is ready for use.

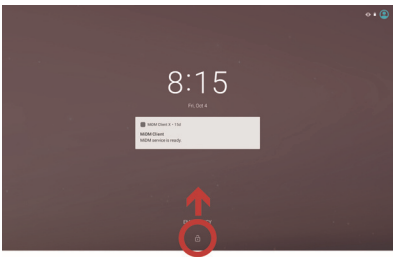

Sleep Mode

Your device will automatically switch off the screen after 1 minute (by default) of inactivity. You can manually switch off the screen by pressing the Power button briefly.

To resume the screen, press the Power button briefly and then unlock the device by dragging the Lock icon ( ) upwards.

Aeroplane Mode

When you are in an aeroplane or in the area where data transferring is not allowed, enable Aeroplane mode. You will be able to use many of your device's applications, but all wireless radios, including wireless networks and Bluetooth, on the device are turned off – it cannot send or receive data.

To enable Aeroplane mode:

1. Slide up from the bottom of the Home screen and tap **Settings**.
2. Tap **Network & internet** → **Advanced**, and tap the **Aeroplane mode** switch to turn it on. The icon in the status bar indicates that Aeroplane mode is on.

ⓘ You can enable WIFI and Bluetooth in Aeroplane mode.

To disable Aeroplane mode:

1. Slide up from the bottom of the Home screen and tap **Settings**.
2. Tap **Network & internet** → **Advanced**, and tap the **Aeroplane mode** switch to turn it off.

Restarting the Device

You may need to reset the device when the device is running slower or improperly. Press and hold the Power button to display the options menu and tap **Restart** to restart the device.

Turning Off

To turn off the device, press and hold the Power button to display the options menu and tap **Power off**.

Shutting Down

If the device stops responding, you may need to shut down the device by pressing and holding the Power button for 8 seconds.

Getting Started

Using the Touch Screen

To operate your device, touch the screen with your finger. You can perform the following actions:

- **Tap**: Touch the screen once with your finger to open items or select on-screen buttons or options.
- **Tap and hold**: Tap and hold on the desired item to open the pop-up menu that contains the available options for the item.

- **Drag**: Tap and hold on the item and then move it to the target position without releasing your finger.
- **Slide/Swipe**: Drag your finger vertically or horizontally across the screen.
  - Drag to the left/right to switch to the next/previous item on the list.
  - Drag to the top/bottom to scroll up/down the screen.

  ⓘ Not all slide gestures are applicable to all applications.

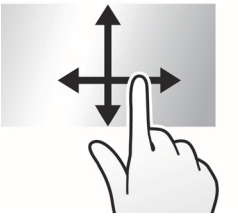

- **Two-finger gestures**: Move your fingers apart or together on the screen to zoom in or out while viewing a picture or a web page.

  ⓘ Not all two-finger gestures are applicable to all applications.

Home Screen

The Home screen is your starting place for tasks, providing quick access to frequently used applications and settings.

To display the app list, swipe up from the bottom of the screen with one finger.

To display the Home screen, tap ● at any time.

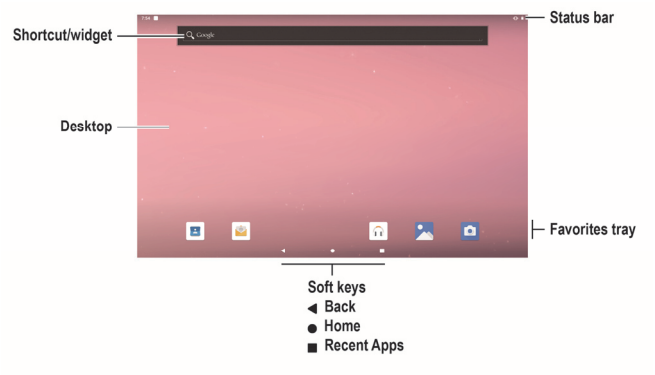

ⓘ Google, Google Play, YouTube and other marks are trademarks of Google LLC.

Your Apps

To see all your apps, slide up from the bottom of the Home screen with one finger to open the app drawer.

You can place an app icon on any of the screens on the desktop. Tap and hold the app icon, slide your finger, and lift your finger to drop the icon into the desired screen.

To view information about an app from the app drawer, tap and hold the icon, slide your finger toward the top of the screen, and drop the icon over **App info**.

Customising Your Device

You can easily customise the device for personal settings through the Settings menu, such as personalising the Home screen, changing the display and sound settings, configuration the connection settings, and more.

To access the Settings menu, slide up from the bottom of the Home screen and tap **Settings**.

Cellular Data Connection

ⓘ This feature is not available on all models.

To use cellular services, you must have a subscription to the function with a mobile phone network service. In most cases, the settings of the cellular services are installed automatically.

To turn on or off the cellular services:

1. Slide up from the bottom of the Home screen and tap **Settings**.
2. Tap **Network & internet** → **Data usage**.
3. Tap the **Mobile data** switch to turn it on or off.

If you are on a limited data allowance, you can monitor the data usage on the device.

1. Slide up from the bottom of the Home screen and tap **Settings**.
2. Tap **Network & internet** → **Data usage**.

ⓘ Turn off the cellular services when not in use to save battery power.

Wireless Network Connection

To use wireless local area networks (WIFI) on your device, you need access to a wireless access point (AP) or "hotspot."

ⓘ The coverage of the WIFI signal can be up to 300 feet (100 metres). However, it varies greatly due to the type of infrastructure, and other objects through which the signal passes.

Connecting to a Wireless Network

1. Slide up from the bottom of the Home screen and tap **Settings**.
2. Tap **Network & internet** → **WIFI**.
3. Tap the WIFI switch to turn it on. The device will automatically scan for available wireless networks.
4. Tap a wireless network to connect.
5. If you select an open network, you will be automatically connected to the network. If you select a secured network, enter the key and then tap **CONNECT**.
6. When your device is connected to a wireless network, the WIFI icon (▼) will appear in the status bar.

The next time your device connects to a previously accessed secured wireless network, you will not be prompted to enter the key again, unless you reset the network settings or reset your device to its factory default settings.

ⓘ Turn off the WIFI function when not in use to save battery power.

Removing a Remembered Network

1. Slide up from the bottom of the Home screen and tap **Settings**.
2. Tap **Network & internet** → **WIFI**.
3. Tap and hold the network to remove on the list, and select **FORGET**.

Bluetooth

Bluetooth is a short-range wireless communications technology that allows Bluetooth-enabled devices to exchange information over a distance of about 30 feet (10 metres) without requiring a physical connection.

Pairing with Another Bluetooth Device

1. Make sure that the Bluetooth function of the other device is turned on.
2. Slide up from the bottom of the Home screen and tap **Settings**.
3. Tap **Connected devices** → **Pair new device**.
4. The device will automatically scan for available Bluetooth devices.
5. Tap the desired device from the list to initiate pairing.
6. Make sure that the same passkey is displayed on your device and the other device, and then tap **PAIR**.

ⓘ Turn off the Bluetooth function when not in use to save battery power.

Disconnecting a Bluetooth Connection

1. Slide up from the bottom of the Home screen and tap **Settings**.
2. Tap **Connected devices**.
3. Tap the desired paired device.
4. When prompted to disconnect, tap **OK**.

Reference

Caring for the Device

Taking good care of your device will ensure trouble-free operation and reduce the risk of damage to your device.

- Keep your device away from excessive moisture and extreme temperatures.
- Avoid exposing your device to direct sunlight or strong ultraviolet light for extended periods of time.
- Do not place anything on top of your device or drop objects on your device.
- Do not drop your device or subject it to severe shock.
- Do not subject your device to sudden and severe temperature changes. This could cause moisture condensation inside the unit, which could damage your device. In the event of moisture condensation, allow the device to dry out completely before use.
- The screen surface can easily be scratched. Avoid touching it with sharp objects. Non-adhesive generic screen protectors designed specifically for use on portable devices with LCD panels may be used to help protect the screen from minor scratches.
- Never clean your device with it powered on. Use a soft, lint-free cloth to wipe the screen and the exterior of your device.
- Do not use paper towels to clean the screen.
- Never attempt to disassemble, repair or make any modifications to your device. Disassembly, modification or any attempt at repair could cause damage to your device and even bodily injury or property damage and will void any warranty.
- Keep your device and its accessories out of the reach of small children or animals.
- Do not store or carry flammable liquids, gases or explosive materials in the same compartment as your device, its parts or accessories.
- To discourage theft, do not leave the device and accessories in plain view in an unattended vehicle.
- Do not leave the device and its accessories in a vehicle in direct sunlight. Overheating may damage the device.
- The device (excluding accessories) is protected again splashes, water and dust. When tested under controlled laboratory conditions, the device is compliant with the IP67 rating of the IEC 60529 standard. The manufacturer guarantees this grade provided all jack covers are properly and securely closed. Immersion in water or water-pressure such as washing the unit with running water may cause damage to the unit and voids warranty. Normal wear might decrease resistance. The device should not be operated in water.

Regulatory Information

For regulatory identification purposes, the series is assigned a model number of N630.

Marking labels located on the exterior of your device indicate the regulations that your model complies with. Please check the marking labels on your device and refer to the corresponding statements in this chapter. Some notices apply to specific models only.

5GHz band (W52,W53): Indoor use only

FCC

Federal Communication Commission Interference Statement

This equipment has been tested and found to comply with the limits for a Class B digital device pursuant to Part 15 of the FCC Rules. These limits are designed to provide reasonable protection against harmful interference in a residential installation. This equipment generates, uses, and can radiate radio frequency energy and, if not installed and used in accordance with the instructions, may cause harmful interference to radio communications. However, there is no guarantee that interference will not occur in a particular installation. If this equipment does cause harmful interference to radio or television reception, which can be determined by turning the equipment off and on, the user is encouraged to try to correct the interference by one or more of the following measures:

- Reorient or relocate the receiving antenna.
- Increase the separation between the equipment and receiver.
- Connect the equipment into an outlet on a circuit different from that to which the receiver is connected.
- Consult the dealer or an experienced radio/TV technician for help.

Any changes or modifications not expressly approved by the manufacturer could void the user's authority to operate the equipment.

This device complies with part 15 of the FCC Rules. Operation is subject to the following two conditions: (1) This device may not cause harmful interference, and (2) this device must accept any interference received, including interference that may cause undesired operation.

Please note:

The use of a non-shielded interface cable with this equipment is prohibited.

IC

Canadian Department Of Communications

CAN ICES-3(B)/NMB-3(B)

Radio Interference Regulations Class B Compliance Notice

This Class B digital apparatus meets all requirements of the Canada Interference-Causing equipment regulations.

Cet appareil numérique de Classe B respecte toutes les exigences du Règlement Canadien sur le matériel brouileur.

This device complies with Industry Canada's licence-exempt RSSs. Operation is subject to the following two conditions:

(1) This device may not cause interference; and

(2) This device must accept any interference, including interference that may cause undesired operation of the device.

Le présent appareil est conforme aux CNR d'Industrie Canada applicables aux appareils radio exempts de licence. L'exploitation est autorisée aux deux conditions suivantes:

(1) l'appareil ne doit pas produire de brouillage, et

(2) l'utilisateur de l'appareil doit accepter tout brouillage radioélectrique subi, même si le brouillage est susceptible d'en compromettre le fonctionnement."

The device could automatically discontinue transmission in case of absence of information to transmit, or operational failure. Note that this is not intended to prohibit transmission of control or signaling information or the use of repetitive codes where required by the technology.

The device for operation in the band 5150–5250 MHz is only for indoor use to reduce the potential for harmful interference to co-channel mobile satellite systems.

High-power radars are allocated as primary users (i.e. priority users) of the bands 5250–5350 MHz and 5650–5850 MHz and that these radars could cause interference and/or damage to LE-LAN devices.

L'appareil peut interrompre automatiquement la transmission en cas d'absence d'informations à transmettre ou de panne opérationnelle. Notez que ceci n'est pas destiné à interdire la transmission d'informations de contrôle ou de signalisation ou l'utilisation de codes répétitifs lorsque cela est requis par la technologie.

Le dispositif utilisé dans la bande 5150-5250 MHz est réservé à une utilisation en intérieur afin de réduire le risque de brouillage préjudiciable aux systèmes mobiles par satellite dans le même canal.

CE

- WWAN:33dBm
- BT:10.5dBm
- WiFi 2.4G:16dBm
- WiFi 5G:15dBm
- NFC:-3.29 dBuA/m@ 10m

Products with the CE marking comply with Radio Equipment Directive (Directive 2014/53/EU) - issued by the Commission of the European Community.

Compliance with these directives implies conformity to the following European Standards:

- EN 62311
- EN 62209-2
- EN 50566
- EN 301 489-1/-3/-17/-19/-52
- EN 55032
- EN 55035
- EN 61000-3-2
- EN 61000-3-3
- EN 300 328: BT/WLAN 2.4 GHz
- EN 301 893: WLAN 5 GHz
- EN 300 330: RFID/NFC
- EN 303 413: GPS
- EN 301 511: GSM 900/1800
- EN 301 908-1/-13
- IEC62368-1:2014
- UL 62368-1, 2nd Edition, 2014-12-01

The device is restricted to indoor use only when operating in the 5150 to 5350 MHz frequency range.

	AT	BE	BG	HR	CY	CZ	DK
	EE	FI	FR	DE	EL	HU	IE
	IT	LV	LT	LU	MT	NL	PL
	PT	RO	SK	SI	ES	SE	UK

ⓘ The DoC letter will be added to the end of the manual.

RF Exposure Information (SAR)

This device has been tested and meets applicable limits for Radio Frequency (RF) exposure. Specific Absorption Rate (SAR) refers to the rate at which the body absorbs RF energy. SAR limits are 1.6 Watts per kilogram (over a volume containing a mass of 1 gram of tissue) in countries that follow the United States FCC limit and 2.0 W/kg (averaged over 10 grams of tissue) in countries that follow the Council of the European Union limit. Tests for SAR are conducted using standard operating positions with the device transmitting at its highest certified power level in all tested frequency bands. To reduce exposure to RF energy, use a hands-free accessory or other similar option to keep this device away from your head and body. Carry this device at least 10 mm away from your body to ensure exposure levels remain at or below the as-tested levels. Choose the belt clips, holsters, or other similar body-worn accessories which do not contain metallic components to support operation in this manner. Cases with metal parts may change the RF performance of the device, including its compliance with RF exposure guidelines, in a manner that has not been tested or certified, and use such accessories should be avoided.

WEEE

This symbol means that according to local laws and regulations your product and/or its battery shall be disposed of separately from household waste. When this product reaches its end of life, take it to a collection point designated by local authorities. Proper recycling of your product will protect human health and the environment.

Bluetooth

Bluetooth®

Safety Precautions

- When using the device, note that the ambient temperature should be below 45ºC (113ºF).
- To prevent possible hearing damage, do not listen at high volume levels for long periods of time.

About Charging

- Use only the charger supplied with your device. Use of another type of charger will result in malfunction and/or danger.
- This product is intended to be supplied by a LISTED Power Unit marked with "LPS", "Limited Power Source" and output rated + 5 V dc / 2.0 A.
- Use a specified battery in the equipment.

About the Charger

- Do not use the charger in a high moisture environment. Never touch the charger when your hands or feet are wet.
- Allow adequate ventilation around the charger when using it to operate the device or charge the battery. Do not cover the charger with paper or other objects that will reduce cooling. Do not use the charger while it is inside a carrying case.
- Connect the charger to a proper power source. The voltage requirements are found on the product case and/or packaging.
- Do not use the charger if the cord becomes damaged.
- Do not attempt to service the unit. There are no serviceable parts inside. Replace the unit if it is damaged or exposed to excess moisture.

About the Battery

- Use a specified battery in the equipment.
- CAUTION: This unit contains a Lithium Ion battery. The battery can burst or explode, releasing hazardous chemicals. To reduce the risk of fire or burns, do not disassemble, crush, puncture, or dispose of in fire or water.
- Important instructions (for service personnel only)
    - Caution: Risk of explosion if battery is replaced by an incorrect type. Dispose of used batteries according to the instructions.
    - Replace only with the same or equivalent type recommended by the manufacturer.
    - The battery must be recycled or disposed of properly.
    - Use the battery only in the specified equipment.

USA Contact Information
Magellan
279 E Arrow Highway San Dimas, CA 91773 USA
+1 909-394-5000
http://www.magellangps.com