MXCHIP®

Datasheet

EMC3290 Wi-Fi/BLE Module

Built-in ARM Cortex V8 dual-core processor, and Flash memory

2.4/5G Hz dual-frequency Wi-Fi, BLE 5.0, rich peripherals

Version：0.5 Date：20223-03-15 Number：DS0206EN

Abstract

- **Input voltage：3.0V~3.6V**
- **Operating Temperature：-40℃ to +85℃**
- **Processor：Dual-core CPU RTL8720DF**
  - Performance core KM4：Cortex-M33 with main frequency up to 200MHz.
  - Energy Efficiency Core KM0：Cortex-M23 with main frequency up to 20MHz.
  - SWD/JTAG simulation debugging interface.

- **Memory**
  - 512K bytes SRAM for KM4 core
  - 64K bytes SRAM for KM0 core
  - XIP flash memory from 4M bytes

- **Wi-Fi**
  - 802.11 a/b/g/n 1T1R 2.4/5GHz dual frequency.
  - Processing Wi-Fi messages using independent Microcontrollers.
  - Support low power TX/RX mode in short distance applications.
  - Support narrow-band mode: 10MHz bandwidth.
  - Support Antenna diversity.
  - Support the IEEE Power Save Model

- **BT 5.0 Low Energy**
  - Comply with Low Power Bluetooth 5.0 Standard.
  - Support high power mode (10dbm).
  - Wi-Fi and BLE time division multiplexing and share the same PA and antenna.
  - Support Bluetooth Master-Slave Mode and BLE mesh.
  - rates

- **Safety**
  - ARM Trust Zone-M Technology.
  - AES/DES/SHA Hardware Accelerator, Random Number Generator
  - Security boot Safe Start
  - Anti-reading mechanism: JTAG interface protection, flash encryption technology.

- **Peripherals**
  - 10 x GPIO
  - 1 x SPI、1 x I2C、
  - 3 x PWM, 2 x ADC
  - 3 x UART
  - Low power RTC

- **Interface and Dimension**
  - Maintain pin compatibility with similar package modules.
  - RF Interface: PCB antenna, IPEX connector antenna
  - 18mm x 33mm, stamp hole

- **Application Functions**
  - Support AliOS and MXOS operating system
  - Provide major cloud platforms access SDK
  - Mass production firmware for typical applications

- **Typical applications**
  - smart home appliances
  - smart electric equipment
  - Industrial automation

- **Ordering Code**

Ordering Code	Notes
EMC3290-DZJ6	PCB antenna, RTL8720DF Processor

Copyright of Shanghai MXCHIP Information Technology Co., Ltd.

Order Code

For example, **EMC 3 29 0 -D Z J 6 -xxx**

Product Series

EMC=Wi-Fi + BLE Module

Product Type

3=3.3V Standard Universal Voltage

Typical Target Applications and Functions

29= IoT Application 29 Series

Shape size, enhancement function

0=18mm x 33mm, 2 x 6pin 2.0 Spacing double row stamp hole + 9 pin 2.0 Spacing stamp hole

RF Interface

P=2.4/5GHz，On-board PCB antenna

E=2.4/5GHz，External antenna IPEX connector

PSRAM Capacity

Z= Without PSRAM

J=4M bytes PSRAM

Flash Capacity

I=2M bytes Flash Memory

J=4M bytes Flash Memory

M=32M bytes Flash Memory

Temperature Range

6= Industrial Temperature Range，-40°C~85°C

Optional

TR= Tape wrap (pallet is used by default)

Optional Model

Order Code	Description
MXKIT-Base	Development board motherboard, suitable for all EMC3290 modules.
MXKIT-Core-C3290	Development board core board for EMC3290 includes the EMC3290-P module. Used with MXKIT-Base.
FX-3290	EMC3290 Production fixture, including accompanying plate: MXKIT-Base， MXKIT-Core-3290.

Copyright of Shanghai MXCHIP Information Technology Co., Ltd.

Version Update Record

Date	Version	Update Items
2023-03-15	0.5	Initial Document.

Copyright Notice

Without permission, it is prohibited to use or copy all or any part of this manual, especially for trademarks, model naming, part numbers and drawings.

Datasheet lower than 1.0 are for reference only and may be modified before mass production.

Catalog

Abstract 1

1. Introduction 5

2. Pin Definition 6
- 2.1. Pin Distribution 6
- 2.2. Pin Definition 6

3. Electrical Parameters 9
- 3.1. Absolute Maximum Parameter 9
- 3.2. Digital IO DC characteristic 9
- 3.3. Temperature 9
- 3.4. ESD 10
- 3.5. RF Parameter 10
  - 3.5.1. Basic RF Parameters 10
  - 3.5.2. Wi-Fi RF characteristics 11
- 3.6. Bluetooth RF characteristic 15

4. Antenna Information 16
- 4.1. Antenna Type 16
- 4.2. PCB Antenna Clearance 16
- 4.3. External Antenna Connector 16

5. Dimensions and Production Guidance 18
- 5.1. Assembly Dimension Diagram 18
- 5.2. Packing dimension diagram 18

6. Production Guidelines 19
- 6.1. Precautions 20
- 6.2. Storage Condition 21
- 6.3. Secondary Reflux Temperature Curve 21

7. Label Information 23

8. Sales and Technical Support Information 24

Table Catalog

Table 1 EMC3290 Pin Definition 6
Table 2 operation mode 7
Table 3 Absolute maximum parameter: voltage 9
Table 4 operating parameter: voltage and current 9
Table 5 operation parameter（3.3V）:Digital IO DC characteristic 9
Table 6 Storage temperature and operation temperature 9
Table 7 Electrostatic discharge parameters 10
Table 8 RF Standard 10
Table 9 EMC3290 IEEE 802.11b TX/RX characteristics 11
Table 10 EMC3290 IEEE802.11g TX/RX characteristics 11
Table 11 EMC3290 IEEE802.11n-HT20 TX/RX characteristics 12

Copyright of Shanghai MXCHIP Information Technology Co., Ltd.

Table 12 EMC3290 IEEE802.11n-HT40 TX/RX characteristics 12
Table 13 EMC3290 IEEE802.11a TX/RX characteristics 13
Table 14 EMC3290 IEEE802.11n-HT20(5G) TX/RX characteristics 13
Table 15 EMC3290 IEEE802.11n-HT40(5G) TX/RX characteristics 14
Table 16 EMC3290 Onboard PCB antenna parameter (2.4GHz) 16
Table 17 EMC3290 Onboard PCB antenna parameter (5GHz) 16

Figure Catalog

Figure 1 EMC3290 Hardware Block Diagram 5
Figure 2 Pin Arrangement 6
Figure 3 IO The power-on state interface 8
Figure 4 PCB Antenna Minimum Clearance（unit: mm） 16
Figure 5 Eternal antenna size 17
Figure 6 Dimension Diagram of External Antenna Connector 17
Figure 7 EMC3290 dimension（unit: mm） 18
Figure 8 EMC3290 packing dimension（unit: mm） 18
Figure 9 Humidity Card 19
Figure 10 Storage Conditions Diagram 21
Figure 11 Reference Secondary Reflux Temperature Curve 22
Figure 12 Module Label Schematic Diagram 23

Copyright of Shanghai MXCHIP Information Technology Co., Ltd.

1. Introduction

EMC3290 is a high-performance module mainly used in applications of the Internet of Things. It has a dual-core microcontroller with ultra-high integration, supports 2.4/5GHz dual-band Wi-Fi and BLE 5.0 wireless communication technology, and includes large capacity Flash, RAM, meet various complex requirements in speech application.

The core of high performance is a 32-bit core with a main frequency up to 200 MHz. Based on the latest ARM v8-M architecture, it not only has low power consumption, but also can complete floating-point operation. The core frequency of high energy efficiency reaches 20MHz, which provides a simplified instruction system for ultra-low power applications, so that the system can keep standby for a long time.

2.4/5GHz dual-band Wi-Fi guarantees stable Internet connection at any time. BLE 5.0 technology can not only facilitate users to complete the rapid configuration of products, but also realize the intelligent networking of a large number of local devices through Mesh technology.

Shanghai MXCHIP provides MXOS software platform to support the development of EMC3290, providing an efficient development environment, rich sample programs and typical applications.

The following diagram is the hardware block diagram of EMC3290 module, which mainly includes:

- Dual-core wireless microcontroller
- Flash memory with optional capacity
- Plate-borne antenna or external antenna pedestal

Figure 1 EMC3290 Hardware Block Diagram

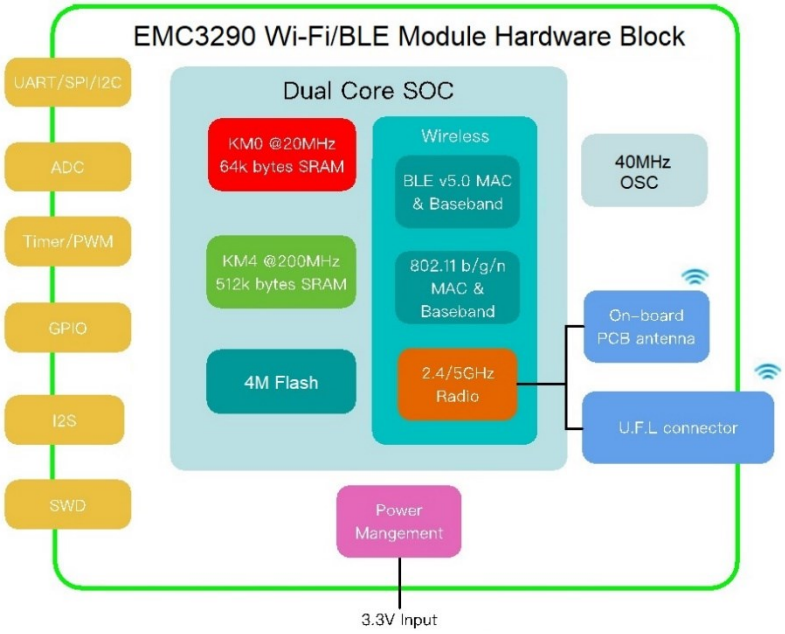

2. Pin Definition

2.1. Pin Distribution

Figure 2 Pin Arrangement

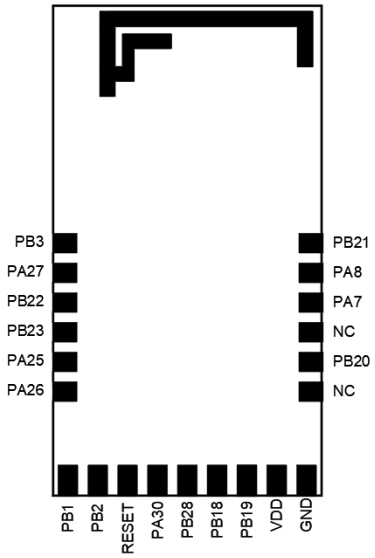

2.2. Pin Definition

Table 1 EMC3290 Pin Definition

Pin No.	Name	I/O	Recommended Function
3	PB3	I/O	SWD_CLK：SWD debugging
4	PA27	I/O	SWD_DIO：SWD debugging
5	PA12	I/O	ADC4
6	PA13	I/O	ADC5
7	PA25	I/O	I2C_SCL
8	PA26	I/O	I2C_SDA
9	PB1	I/O	LP_UART_TXD, application serial port
10	PB2	I/O	LP_UART_RXD, application serial port，ISP mode, refer to Table 2 for operating mode selection
11	CHIP_EN(3) (5)	I/O	RESET
12	PA30	I/O	PWM7
13	PA28	I/O	PWM6
14	PB18	I/O	HS_UART0_RXD
15	PB19	I/O	HS_UART0_TXD
16	VDD	I/O	VDD
17	VSS	I/O	GND
18	NC	I/O	-
19	PB22(1)	I/O	BOOT, refer to Table 2 for operating mode selection
20	NC	I/O	-
21	PA7	I/O	DBG_TXD，debugging/download serial port
22	PA8	I/O	DBG_RXD，debugging/download serial port

Copyright of Shanghai MXCHIP Information Technology Co., Ltd.

23	PB23	I/O	EASYLINK, refer to Table 2 for operating mode selection

Notes:

1. Module working mode selection signal. During the startup phase, the module detects the level of these pins and enters a specific working state. The correspondence between level and working mode is shown in Table 2:

Table 2 operation mode

Operation mode		**PB3 Default: 0**	**PB2 Default: 0**	**PB20 (BOOT) Default: 1**	**PB21 (EASYLINK) Default: 1**
ISP Program Mode		1	1	not detect	not detect
Test mode		1	0	not detect	not detect
Normal	QC	1	not detect	0	0
	ATE			0	1
	APP			1	not detect

(1) ISP Program Mode, Test mode and Normal mode are detected by hardware at startup. PB3 and PB2, because it is a function of hardware solidification, it cannot be modified.

(2) QC, ATE and APP modes are judged by the firmware provided by MXCHIP, and the detection conditions and functions can be adjusted by modifying the firmware.

(3) ISP Program Mode function contempt: In the startup phase, if the processor hardware detects that the levels of PB3 and PB2 are high, it enters ISP programming mode. In the ISP programming mode, the flash of the module can be programmed through UART2 (PA7, PA8).

(4) Test mode is the reserved mode of the chip and will not be used.

(5) After the startup is completed, when the processor runs the firmware provided by MXCHIP, the firmware detects the status of PB20 and PB21 to enter the corresponding working mode. among them:

- QC mode is used to self-check the hardware during production and generate QC information for the production device to check the quality of the module.
- In the ATE mode, a series of serial commands are provided to make the radio frequency in a specific transceiver mode, so that the instrument can be tested and calibrated.
- APP is the normal working mode for running applications.

2. The UART2 serial port is used for the input / output of debugging information. Do not use it during design and provide as easy a way as possible to facilitate software development.
3. The CHIP_EN pin is an enable reset pin, which is active low and can be left floating if not used. Or pull up 3.3V.
4. Please keep the unused pins floating. It should be noted that the IO port is in a floating state at startup. If you need to configure the state of the pin through software, you need to wait until the code in the bootloader starts to execute. The time from when the module is powered on to when the code in the bootloader is executed will be affected by the flash startup time. Therefore, if you need IO to be in a certain level state at startup, you need to use a 100k resistor on the pin to pull up and down. Figure 3 shows the level change of the IO port whose software is configured as a low level after being pulled up by an external 100K resistor in the floating state. It can be seen that the

Copyright of Shanghai MXCHIP Information Technology Co., Ltd.

time from the power-on of the module to the controllable IO port software is 69.4ms, and the time during which the IO is pulled to the high level is about 20ms.

Figure 3 IO The power-on state interface

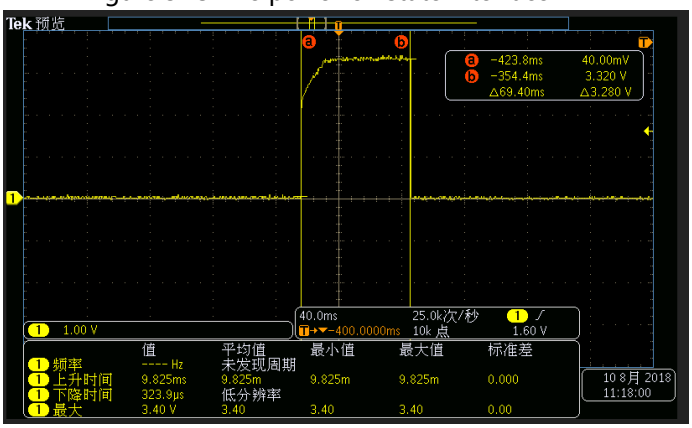

3. Electrical Parameters

3.1. Absolute Maximum Parameter

Modules operating outside the absolute maximum ratings may cause permanent damage. At the same time, long-term exposure to the maximum rating conditions will affect the reliability of the module.

Table 3 Absolute maximum parameter: voltage

Symbol	Ratings	Min	Max	Unit
VDD–VSS	Voltage	–0.3	3.6	V
VIN	Input voltage on any other pin	VSS−0.3	VDD+0.3	V

Table 4 operating parameter: voltage and current

Symbol	Note	Specification			
		Min.	Typical	Max.	Unit
V_{DD}	Voltage	3.0	3.3	3.6	V
I_{VDD}	3.3V Rating Current (with internal regulator and integrated CMOS PA)			450	mA

3.2. Digital IO DC characteristic

The electrical characteristics of the module's digital IO port are described in Table 12 under 3.3V power supply.

Table 5 operation parameter（3.3V）:Digital IO DC characteristic

Symbol	Note	Conditions	Specification			
			Min.	Typical	Max.	Unit
V_{IH}	Input-High Voltage	LVTTL	2.0	-	-	V
V_{IL}	Input-Low Voltage	LVTTL	-	-	0.8	V
V_{OH}	Output-High Voltage	LVTTL	2.4	-	-	V
V_{OL}	Output-Low Voltage	LVTTL	-	-	0.4	V
I_{IL}	Input-Leakage Current	V_{IN} = 3.3V/0V	-10	±1	10	μA

3.3. Temperature

Table 6 Storage temperature and operation temperature

Symbol	Ratings	Min.	Max	Unit
T_{STG}	Storage temperature	–55	125	℃
T_A	Ambient Operating Temperature	-40	85	℃
T_J	Junction Temperature	0	125	℃

Copyright of Shanghai MXCHIP Information Technology Co., Ltd.

3.4. ESD

Table 7 Electrostatic discharge parameters

Symbol	Name	Name	Level	Max.	Unit
VESD(HBM)	Electrostatic discharge voltage (Human body model)	TA= +25 °C comply with JESD22-A114	2	2000	V
VESD(CDM)	Electrostatic discharge voltage (Discharge equipment model)	TA = +25 °C 遵守 JESD22-C101	II	500	

3.5. RF Parameter

3.5.1. Basic RF Parameters

Table 8 RF Standard

Item		Specification	
Operating Frequency		2.4G Band：2400~2483MHz，5G band：5180~5825MHz	
Specification	Wi-Fi	IEEE802.11b/g/n(2.4G)，802.11a/n(5G)	
	Bluetooth	Bluetooth 5.0	
Modulation Type	Wi-Fi	11b: DBPSK, DQPSK, CCK for DSSS 11g/a/n: BPSK, QPSK, 16QAM, 64QAM for OFDM 11g: BPSK, QPSK, 16QAM, 64QAM for OFDM 11n: MCS0~7, OFDM	
	Bluetooth	GFSK	
Data Rates	Wi-Fi	20MHz	11b：1,2,5.5 和 11Mbps 11g /a: 6,9,12,18,24,36,48,54Mbps 11n_HT20: MCS0~7, up to 72Mbps
		40MHz	11n_HT40(2.4G&5G): MCS0~7, up to 150Mbps
	Bluetooth	2MHz	1Mbps，2Mbps（BT 5.0）

Copyright of Shanghai MXCHIP Information Technology Co., Ltd.

Antenna type	One U.F.L connector for external antenna PCB printed ANT (Reserve)
Antenna Interface	1T1R, single-stream

3.5.2. Wi-Fi RF characteristics

IEEE 802.11b mode

Table 9 EMC3290 IEEE 802.11b TX/RX characteristics

Item	**Description**			
Mode	IEEE802.11b			
Channel	CH1 to CH13			
Data Rates	1, 2, 5.5, 11Mbps			
TX Characteristics	**Min.**	**Typical.**	**Max.**	**Unit**
Transmitter Output Power				
11b Target Power@1Mbps	15.0	16.5	18.0	dBm
11b Target Power@11Mbps	15.0	16.5	18.0	dBm
Spectrum Mask @ target power				
fc +/-11MHz to +/-22MHz	-	-	-30	dB
fc > +/-22MHz	-	-	-50	dB
Frequency Error	-10	-2	+10	ppm
Constellation Error (peak EVM) @target power				
1~11Mbps	-	-	35% (or -11dB)	
RX Characteristics	**Min.**	**Typical.**	**Max.**	**Unit**
Minimum Input Level Sensitivity				
1Mbps (FER≦8%)	-	-98	-	dBm
11Mbps (FER≦8%)	-	-88	-	dBm

IEEE802.11g mode

Table 10 EMC3290 IEEE802.11g TX/RX characteristics

Item	**Description**			
Mode	IEEE802.11g			
Channel	CH1 to CH13			
Data Rates	6, 9, 12, 18, 24, 36, 48, 54Mbps			
TX Characteristics	**Min.**	**Typical.**	**Max.**	**Unit**
Transmitter Output Power				
11g Target Power@6Mbps	13.5	15.0	16.5	dBm
11g Target Power@54Mbps	13.0	14.5	16	dBm
Spectrum Mask @ target power				
fc +/- 11MHz	-	-	-20	dB
fc +/- 20MHz	-	-	-28	dB
fc > +/-30MHz			-40	dB

Copyright of Shanghai MXCHIP Information Technology Co., Ltd.

Frequency Error	-10	-2	+10	ppm
Constellation Error (peak EVM) @target power				
6Mbps	-	-30	-5	dBm
54Mbps	-	-30	-25	dBm
RX Characteristics	**Min.**	**Typical.**	**Max.**	**Unit**
Minimum Input Level Sensitivity				
6Mbps (FER≦10%)	-	-93	-	dBm
54Mbps (FER≦10%)	-	-76	-	dBm

IEEE802.11n-HT20(2.4G) mode

Table 11 EMC3290 IEEE802.11n-HT20 TX/RX characteristics

Item	**Description**			
Mode	IEEE802.11n HT20			
Channel	CH1 to CH13			
Data Rates	MCS0/1/2/3/4/5/6/7, up to 65Mbps			
TX Characteristics	**Min.**	**Typical.**	**Max.**	**Unit**
Transmitter Output Power				
11n Target Power@MCS0	13.5	14.5	16	dBm
11n Target Power@ MCS7	12.5	14	15.5	dBm
Spectrum Mask @ target power				
fc +/- 11MHz	-	-	-20	dB
fc +/- 20MHz	-	-	-28	dB
fc > +/-30MHz			-45	dB
Frequency Error	-10	-2	+10	ppm
Constellation Error (peak EVM) @target power				
MCS0	-	-30	-5	dBm
MCS7	-	-31	-27	dBm
RX Characteristics	**Min.**	**Typical.**	**Max.**	**Unit**
Minimum Input Level Sensitivity				
MCS0 (FER≦10%)	-	-93	-93	dBm
MCS7 (FER≦10%)	-	-73.5	-73	dBm

IEEE802.11n-HT40(2.4G) mode

Table 12 EMC3290 IEEE802.11n-HT40 TX/RX characteristics

Item	**Description**			
Mode	IEEE802.11n HT40			
Channel	CH1 to CH13			
Data Rates	MCS0/1/2/3/4/5/6/7, up to 135Mbps			
TX Characteristics	**Min.**	**Typical.**	**Max.**	**Unit**
Transmitter Output Power				
11n Target Power@MCS0	13.5	14.5	16	dBm
11n Target Power@ MCS7	12.5	14	15.5	dBm

Copyright of Shanghai MXCHIP Information Technology Co., Ltd.

Spectrum Mask @ target power				
fc +/- 22MHz	-	-	-20	dB
fc +/- 40MHz	-	-	-28	dB
fc > +/-60MHz	-	-	-45	dB
Frequency Error	-10	-2	+10	ppm
Constellation Error (peak EVM) @target power				
MCS0	-	-30	-5	dBm
MCS7	-	-32	-27	dBm
RX Characteristics	**Min.**	**Typical.**	**Max.**	**Unit**
Minimum Input Level Sensitivity				
MCS0 (FER≦10%)	-	-90	-	dBm
MCS7 (FER≦10%)	-	-71.5	-	dBm

IEEE802.11a mode

Table 13 EMC3290 IEEE802.11a TX/RX characteristics

Item	**Description**			
Mode	IEEE802.11a			
Channel	CH36 to CH165			
Data Rates	6, 9, 12, 18, 24, 36, 48, 54Mbps			
TX Characteristics	**Min.**	**Typical.**	**Max.**	**Unit**
Transmitter Output Power				
11g Target Power@6Mbps	12.5	14	15.5	dBm
11g Target Power@54Mbps	11.5	13	14.5	dBm
Spectrum Mask @ target power				
fc +/- 11MHz	-	-	-20	dBr
fc +/- 20MHz	-	-	-28	dBr
fc > +/-30MHz			-40	dBr
Frequency Error	-10	-2	+10	ppm
Constellation Error (peak EVM) @target power				
MCS0	-	-29	-5	dBm
MCS7	-	-29	-25	dBm
RX Characteristics	**Min.**	**Typical.**	**Max.**	**Unit**
Minimum Input Level Sensitivity				
6Mbps (FER≦10%)	-	-89	-	dBm
54Mbps (FER≦10%)	-	-74.5	-	dBm

IEEE802.11n HT20(5G) mode

Table 14 EMC3290 IEEE802.11n-HT20(5G) TX/RX characteristics

Item	**Description**
Mode	IEEE802.11n(5G) HT20
Channel	CH36 to CH165

Data Rates	MCS0/1/2/3/4/5/6/7, up to 65Mbps			
TX Characteristics	**Min.**	**Typical.**	**Max.**	**Unit**
Transmitter Output Power				
11n Target Power@MCS0	11.5	13	14.5	dBm
11n Target Power@MCS7	10.5	12	13.5	dBm
Spectrum Mask @ target power				
fc +/- 11MHz	-	-	-20	dB
fc +/- 20MHz	-	-	-28	dB
fc > +/-30MHz	-	-	-45	dB
Frequency Error	-10	-2	+10	ppm
Constellation Error (peak EVM) @target power				
MCS0	-	-28	-5	dBm
MCS7	-	-30	-27	dBm
RX Characteristics	**Min.**	**Typical.**	**Max.**	**Unit**
Minimum Input Level Sensitivity				
MCS0 (FER≦10%)	**-**	**-92.5**	**-**	**dBm**
MCS7 (FER≦10%)	**-**	**-72**	**-**	**dBm**

IEEE802.11n HT40(5G) mode

Table 15 EMC3290 IEEE802.11n-HT40(5G) TX/RX characteristics

Item	Description			
Mode	IEEE802.11n(5G) HT40			
Channel	CH36 to CH165			
Data Rates	MCS0/1/2/3/4/5/6/7, up to 135Mbps			
TX Characteristics	**Min.**	**Typical.**	**Max.**	**Unit**
Transmitter Output Power				
11n Target Power@MCS0	11.5	13	14.5	dBm
11n Target Power@MCS7	10.5	12	13.5	dBm
Spectrum Mask @ target power				
fc +/- 11MHz	-	-	-20	dBr
fc +/- 20MHz	-	-	-28	dBr
fc > +/-30MHz			-45	dBr
Frequency Error	-10	-2	+10	ppm
Constellation Error (peak EVM) @target power				
MCS0	-	-28	-5	dBm

MCS7	-	-30	-27	dBm
RX Characteristics	**Min.**	**Typical.**	**Max.**	**Unit**
Minimum Input Level Sensitivity				
MCS0 (FER≦10%)	-	-89	-	dBm
MCS7 (FER≦10%)	-	-69	-	dBm

3.6. Bluetooth RF characteristic

TBD

Copyright of Shanghai MXCHIP Information Technology Co., Ltd.

4. Antenna Information

4.1. Antenna Type

EMC3290 has two specifications: PCB antenna and IPX connector. Please refer to order code.

Table 16 EMC3290 Onboard PCB antenna parameter (2.4GHz)

Item	Min.	Typical	Max.	Unit
Frequency	2400		2500	MHz
Impedance		50		Ω
VSWR			2	
Gain	-0.37dBi			
Efficiency	47%			

Table 17 EMC3290 Onboard PCB antenna parameter (5GHz)

Item	Min.	Typical	Max.	Unit
Frequency	5100		5800	MHz
Impedance		50		Ω
VSWR			2	
Gain	-0.69dBi			
Efficiency	42%			

4.2. PCB Antenna Clearance

When using PCB antenna in WIFI module, it is necessary to ensure that PCB and other metal devices are at least 16 mm away from the motherboard. The shaded areas in the figure below need to be far away from metal devices, sensors, interference sources and other materials that may cause signal interference.

Figure 4 PCB Antenna Minimum Clearance（unit: mm）

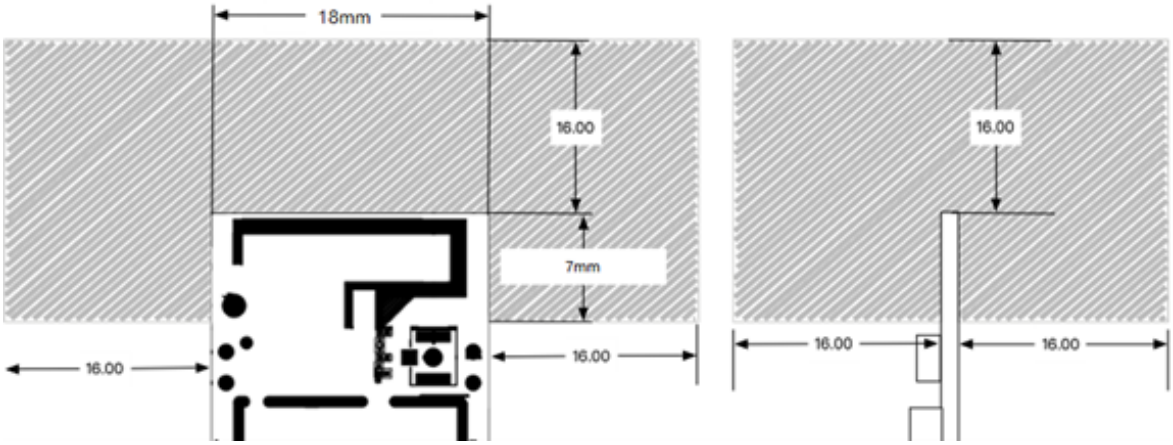

4.3. External Antenna Connector

Users can select 2.4G & 5G antennas with different external dimensions and gains of no more than 2dBi

Copyright of Shanghai MXCHIP Information Technology Co., Ltd.

depending on the application environment. The following is a copper tube antenna for an IPEX connector commonly used by MXCHIP.

Figure 5 Eternal antenna size

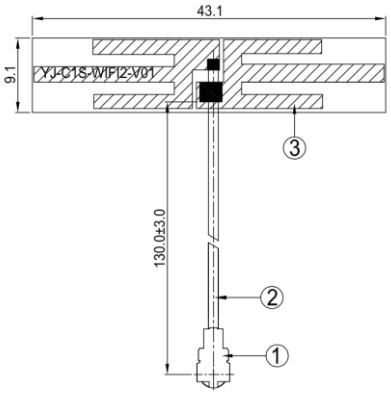

Figure 6 Dimension Diagram of External Antenna Connector

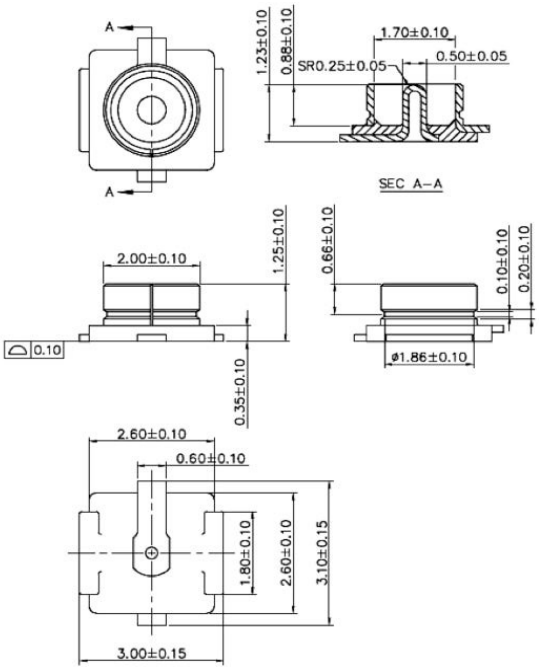

- Frequency Range: 2.4-2.5GHz 5.15-5.85GHz z
- Input independence: 50 Ohm
- SWR: < 2.0
- Gain: 3.0dBi@2.4-2.5GHz 5.9dBi@5.15-5.85GHz
- Polarization: vertical
- Directionality: Omnidirectional
- Copper tube: 4.4*23mm: 4.4*23mm
- RL: < -10 dB
- Cable: O.D.1.13mm//L=130mm, Blue

PCB Antenna：
Manufactuer：Shanghai MXCHIP Information Technology Co., Ltd
address：9th Floor,Building B,Lane2145,JinshaJiang Road, Putuo District, Shanghai
Model：EMC3290-D
Type：PCB Antenna

FPC Antenna：
Manufacturer：Shenzhen Bat Wireless Technology Co., Ltd
address：1409, Building A, Zhiyun Industrial Park, No. 13 Huaxing Road, Henglang Community, Dalang Street, Longhua District, Shenzhen
Model：EMC3290-S
type：Soft Board Antenna

Copyright of Shanghai MXCHIP Information Technology Co., Ltd.

5. Dimensions and Production Guidance

5.1. Assembly Dimension Diagram

Figure 7 EMC3290 dimension（unit: mm）

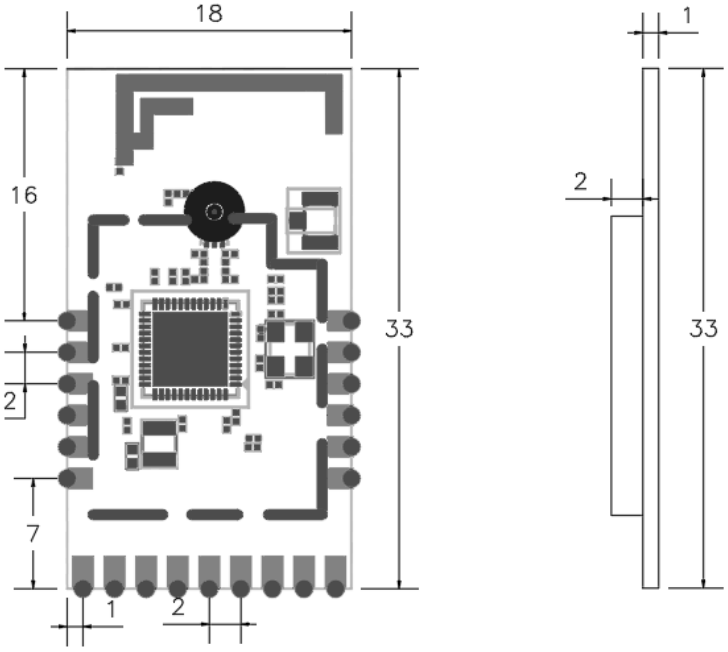

5.2. Packing dimension diagram

Figure 8 EMC3290 packing dimension（unit: mm）

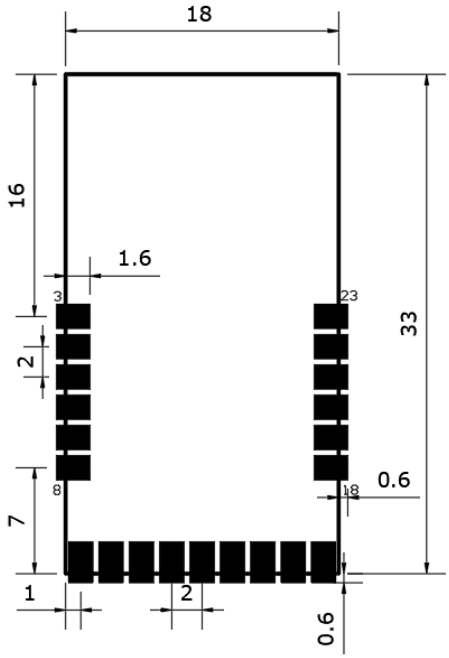

Copyright of Shanghai MXCHIP Information Technology Co., Ltd.

6. Production Guidelines

MXCHIP stamp port packaging module must be SMT machine patches, module humidity sensitivity grade MSL3, after unpacking more than a fixed time patches to bake module.

- SMT patches require instruments
  - Reflow bonding machine
  - AOI detector
  - 6-8mm suction nozzle
- Baking requires equipment:
  - Cabinet oven
  - Anti-static, high temperature tray
  - Antistatic and heat resistant gloves

The storage conditions of MXCHIP module are as follows:

- Moisture-proof bags must be stored in an environment with temperature < 30 degree C and humidity < 85% RH.
- A humidity indicator card is installed in the sealed package.

Figure 9 Humidity Card

After the module is split, if the humidity card shows pink, it needs to be baked.

The baking parameters are as follows:

- The baking temperature is 120℃±5℃ and the baking time is 4 hours.
- The alarm temperature is set to 130℃.
- SMT patches can be made after cooling < 36℃ under natural conditions.
- Drying times: 1 time.
- If there is no welding after baking for more than 12 hours, please bake again.

Copyright of Shanghai MXCHIP Information Technology Co., Ltd.

If the disassembly time exceeds 3 months, SMT process is forbidden to weld this batch of modules, because PCB gold deposition process, over 3 months, pad oxidation is serious, SMT patch is likely to lead to virtual welding, leak welding, resulting in various problems, our company does not assume the corresponding responsibility;

Before SMT patch, ESD (Electrostatic Discharge, Electrostatic Release) protection should be applied to the module.

SMT patches should be made according to the reflow curve. The peak temperature is 250 C. The reflow temperature curve is shown in Chapter 9, Figure 11.

In order to ensure the qualified rate of reflow soldering, 10% of the first patches should be taken for visual inspection and AOI testing to ensure the rationality of furnace temperature control, device adsorption mode and placement mode, and 5-10 patches per hour are recommended for visual inspection and AOI testing in subsequent batch production.

6.1. Precautions

- Operators of each station must wear static gloves during the entire production process;
- Do not exceed the baking time when baking;
- It is strictly forbidden to add explosive, flammable or corrosive substances during baking;
- When baking, the module uses a high temperature tray to be placed in the oven to keep the air circulation between each module while avoiding direct contact between the module and the inner wall of the oven;
- When baking, please close the oven door to ensure that the oven is closed to prevent temperature leakage and affect the baking effect.
- Try not to open the door when the oven is running. If it must be opened, try to shorten the time for opening the door;
- After baking, the module should be naturally cooled to <36°C before wearing the static gloves to avoid burns;
- When operating, strictly guard against water or dirt on the bottom of the module;

The temperature and humidity control level of MXCHIP factory module is Level3, and the storage and baking conditions are based on IPC/JEDEC J-STD-020.

Copyright of Shanghai MXCHIP Information Technology Co., Ltd.

6.2. Storage Condition

Figure 10 Storage Conditions Diagram

6.3. Secondary Reflux Temperature Curve

We recommend solder paste model: SAC305, lead-free. No more than 2 reflux times.

Copyright of Shanghai MXCHIP Information Technology Co., Ltd.

Figure 11 Reference Secondary Reflux Temperature Curve

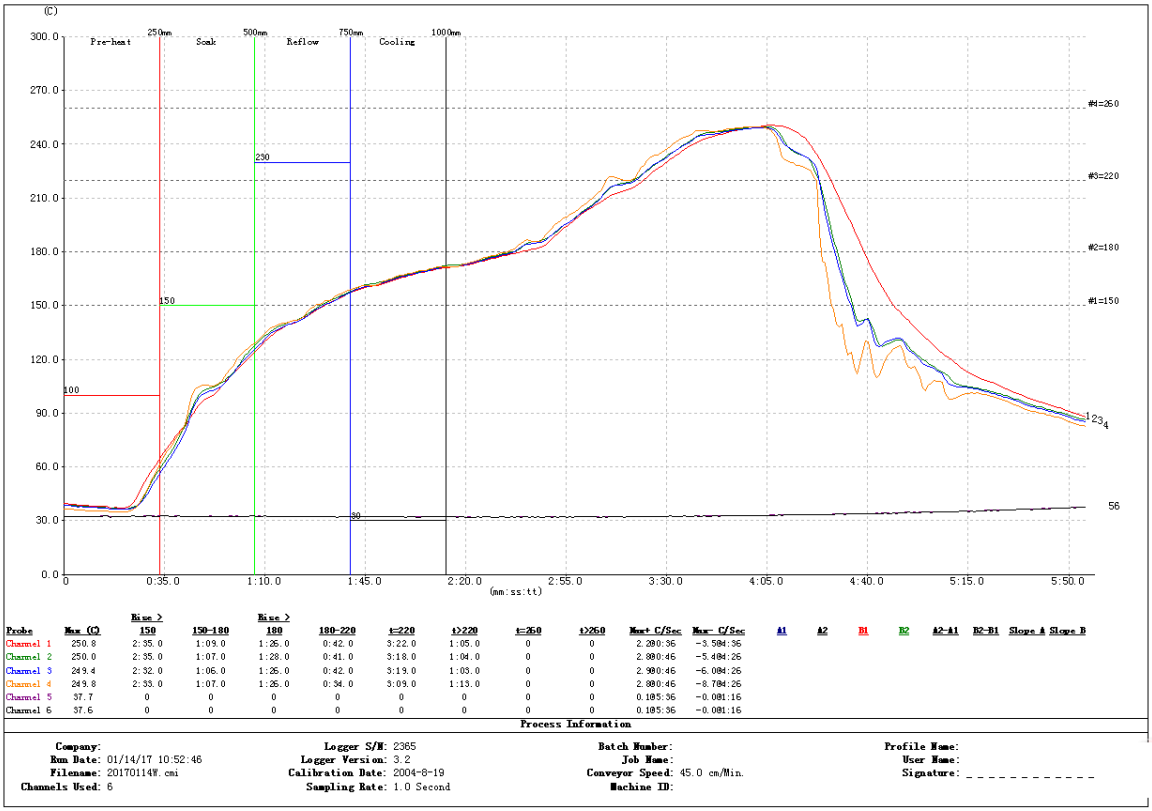

7. Label Information

Figure 12 Module Label Schematic Diagram

1. MXCHIP: Company Logo.
2. CMIIT ID: SRRC Model Authorization ID.
3. EMC3290-P: Product Main Type.
4. B0F8936C39CA: MAC Address.

Copyright of Shanghai MXCHIP Information Technology Co., Ltd.

FCC Statements

This device complies with part 15 of the FCC Rules. Operation is subject to the following two conditions:
(1) This device may not cause harmful interference, and
(2) this device must accept any interference received, including interference that may cause undesired operation.

Changes or modifications not expressly approved by the party responsible for compliance could void the user's authority to operate the equipment.

FCC Radiation Exposure Statement
The modular can be installed or integrated in mobile or fix devices only. This modular cannot be installed in any portable device, for example, USB dongle like transmitters is forbidden.
This modular complies with FCC RF radiation exposure limits set forth for an uncontrolled environment. This transmitter must not be co-located or operating in conjunction with any other antenna or transmitter. This modular must be installed and operated with a minimum distance of 20 cm between the radiator and user body.

If the FCC identification number is not visible when the module is installed inside another device, then the outside of the device into which the module is installed must also display a label referring to the enclosed module. This exterior label can use wording such as the following: “Contains Transmitter Module FCC ID:P53-EMC3290Or Contains FCC ID:P53-EMC3290”

When the module is installed inside another device, the user manual of this device must contain below warning statements:
1. This device complies with Part 15 of the FCC Rules. Operation is subject to the following two conditions:
(1) This device may not cause harmful interference, and
(2) This device must accept any interference received, including interference that may cause undesiredoperation.
2. Changes or modifications not expressly approved by the party responsible for compliance could void the user's authority to operate the equipment.
The devices must be installed and used in strict accordance with the manufacturer's instructions as described in the user documentation that comes with the product.

The host product manufacturer is responsible for compliance to any other FCC rules that apply to the host not covered by the modular transmitter grant of certification. The final host product still requires Part 15 Subpart B compliance testing with the modular transmitter installed.
The end user manual shall include all required regulatory information/warning as shown in this manual, include:
This product must be installed and operated with a minimum distance of 20 cm between the radiator and user body.

8. Sales and Technical Support Information

If you need to consult or purchase this product, please call Shanghai MXCHIP Information Technology Co., Ltd. during office hours.

Office hours: Monday to Friday morning: 9:00-12:00, afternoon: 13:00-18:00

Contact Tel: +86-21-52655026

Address: 9th Floor, Lane 5, 2145 Jinshajiang Road, Putuo District, Shanghai

Zip code: 200333

Email: sales@mxchip.com

Copyright of Shanghai MXCHIP Information Technology Co., Ltd.