MXCHIP®

Datasheet

EMC5020-P Embedded Wi-Fi/BLE IoT Module

Built-in 32-bit Soc, 2.4G Hz IEEE 802.11 b/g/n, Bluetooth 5.0
ultra-high integration, rich peripherals

version：0.5 Date：2024-05-22 Number：DS0193EN

Abstract

- **Input Voltage：5.0V**
- **Operating Temperature：** -30℃ to +85℃
- **Processor: TG7100C Wi-Fi/BLE Combo SoC**
  - Main frequency up to 192MHz
- **Memory**
  - 276K bytes SRAM
  - 128K bytes ROM
  - 1kbit eFuse
  - 2M bytes XIP Flash
- **Wi-Fi**
  - IEEE 802.11 b/g/n 1T1R 2.4GHz Single Frequency
  - Support HT20，up to 65Mbps@MCS7
  - Support WPA/WPA2 Personal/WPA2 Enterprise/ WPA3
  - Support STA, SoftAP and Monitor
- **Bluetooth**
  - Comply with BLE 5.0, slave mode
  - Support BLE 5.0 Channel slection#2
  - Not support 2M PHY/coding PHY/ADV extension
  - Wi-Fi and BLE time division multiplexing, sharing the same PA and antenna
  - Set Wi-Fi network parameter
- **Peripherals**
  - 4 Pin connectors provide power and UART, soldering free
  - Board mounted PCB antenna, or use IPEX connector to connect external antenna
  - 21.6mm x 35.6mm
  - Optional plastic casing, wiring harness, and adhesive spraying/pouring process

- **Application Functions**
  - Support AliOS and MXOS operating system
  - Mass production firmware for typical
  - Access Tmall Genie quickly
- **Typical application**
  - smart home appliances
  - smart electric equipment
  - Industrial automation
- **Order Code**

Order code	Description
EMC5020-PZI5	On-board PCB board, -30℃ to +85℃
EMC5020-EZI5	External IPEX connector antenna, -30℃ to +85℃

Copyright of Shanghai MXCHIP Information Technology Co., Ltd.

Order Code

Example **EMC 5 02 0 -P ZI5 -BOX1 -1 1 1 -CN**

Product Series

EMC = IoT Wi-Fi/BLE Combo Module

Product Type

5 = Welding free wireless module

Typical target applications and features

02 = IOT Application 2 Series

Dimensions, Enhancements

0 = 21.6mm x 35.6mm，4 Pins UART connector

RF Interface

P = 2.4GHz on-board PCB antenna

E = 2.4GHz IPEX external connector

Other Parameter

ZI5 = no PSRAM，2M Flash, temperature: -30°C~85°C

Shell

[Omitted, followed by 3 parameters]=PCBA, without casing

BOX1 = PCBA and spray box

BOX2 = PCBA and glue box

PCB Spray

0 = no spray

1 = spray

Including Shell

0 = no shell

1 = with shell（Including internal and external screws）

Install the module PCBA in the housing

0 = Not assembled

1 = Shipped after assembly

Wiring harness and handling

CN = 4 Pins UART interface connector without soldering

[Other]=Customized cable number, please contact MXCHIP for more information

Copyright of Shanghai MXCHIP Information Technology Co., Ltd.

Accessories

Order Code	Description
MXKIT-Base	Development board for all EMC5020 modules
MXKIT-Core-5020	The development board core board for the EMC5020, used with MXKIT-Base
FX-5020	EMC5020 production fixture with accompanying test board：MXKIT-Base, MXKIT-Core-5020

Copyright of Shanghai MXCHIP Information Technology Co., Ltd.

Release Note

Date	Version	Updates
2021-09-10	0.1	Initial version
2021-11-07	0.2	Update order code
2023-04-12	0.3	Update some power parameter
2023-07-17	0.4	Update 4pin connector dimension
2024-05-22	0.5	Add Radiation Exposure Statement

Copyright Notice

Without permission, it is prohibited to use or copy all or any part of this manual, especially for trademarks, model naming, part numbers and drawings.

Content

1. Introduction 3
4. Pin Definition 4
   4.1. Pin Arrangement 4
   4.2. Pin Definition 4
5. Electrical Parameter 7
   5.1. Absolute Electrical Parameters 7
   5.2. Working Condition 7
   5.3. Power Consumption of Typical Application 7
   5.4. ESD 8
   5.5. RF Parameter 8
      5.5.1. Wi-Fi 8
      5.5.2. Bluetooth RF parameter 9
6. Antenna Information 10
   6.1. PCB antenna and usage 10
      6.1.1. On-board PCB antenna parameter 10
   ■ PCB Antenna Clearance 10
   6.2. External antenna parameters and use 10
      6.2.1. SRRC Important statements 11
7. Production Guidelines 12
   7.1. Precautions 13
   7.2. Secondary reflow temperature curve 13
   7.3. Storage Condition 15
8. FCC Warning 16
9. Label 17
10. Radiation Exposure Statement 18
11. Sales and Technical Support Information 21

Table Catalog

Table 1 Pin Definition 4
Table 2 TP Definition 4
Table 3 Working Mode Selection 5
Table 4 Absolute maximum parameter 7
Table 5 Working Temperature 7
Table 6 Power Consumption of Typical Application 7
Table 7 Electrostatic discharge parameters 8
Table 8 Wi-Fi RF parameter 8
Table 9 Output Power 9
Table 10 Frequency error 9
Table 11 EVM 9
Table 12 RX sensitivity 9
Table 13 Bluetooth TX/RX performance 9
Table 14 on-board PCB antenna parameter 10
Table 15 Typical furnace temperature settings 13

Copyright of Shanghai MXCHIP Information Technology Co., Ltd.

Figure Catalog

Figure 1 Pin Arrangement 4
Figure 2 Antenna minimum clearance area (unit: mm) 10
Figure 3 Copper tube antenna size 11
Figure 4 Dimension drawing of external antenna connector 11
Figure 5 Humidity Card 12
Figure 6 Typical secondary reflux temperature profile 14
Figure 7 Storage Conditions Diagram 15
Figure 8 Label Diagram 17

Copyright of Shanghai MXCHIP Information Technology Co., Ltd.

1. Introduction

The EMC5020 series module has built-in Wi Fi SoC, which can be connected through Wi Fi network and connected to the IoT cloud platform, achieving voice control and remote control of apps. The solderless Wi Fi/BLE Combo module is mainly used for IoT data communication. Connect to the main control system through a simple communication cable to provide internet data access services for devices. The supporting shell, wiring harness, and adhesive process make the use of the module very convenient, and have the characteristics of waterproof and moisture-proof, especially suitable for various household appliances and industrial products.

The EMC5020 module is equipped with an ultra-high integration Wi Fi/BLE Combo microcontroller, providing the necessary computing power and stable Wi Fi/BLE connectivity for IoT data terminals. This chip integrates:

1. RISC-V core with main frequency up to 192MHz
2. 276K bytes of SRAM
3. 2M Byte SPI Flash
4. 2.4GHz Wi Fi controller compliant with IEEE 802.11 b/g/n standard
5. Low power Bluetooth controller compliant with Bluetooth 5.0 standard

The EMC5020 module is powered by a 5V DC power supply on a 4PIN connector and communicates with the main control system through a 5V level UART interface, making it suitable for various smart home appliance application scenarios.

MXCHIP provides an MXOS software platform to support the development of the EMC5020 series modules, providing an efficient development environment, rich sample programs, and various typical applications to help customers quickly build Tmall Genie ecological products.

The following diagram is the hardware block diagram of the EMC5020 module, mainly including:

1. Wi Fi/BLE microcontroller
2. On board or external antenna
3. Power supply and communication interface

Copyright of Shanghai MXCHIP Information Technology Co., Ltd.

4. Pin Definition

4.1. Pin Arrangement

Figure 1 Pin Arrangement

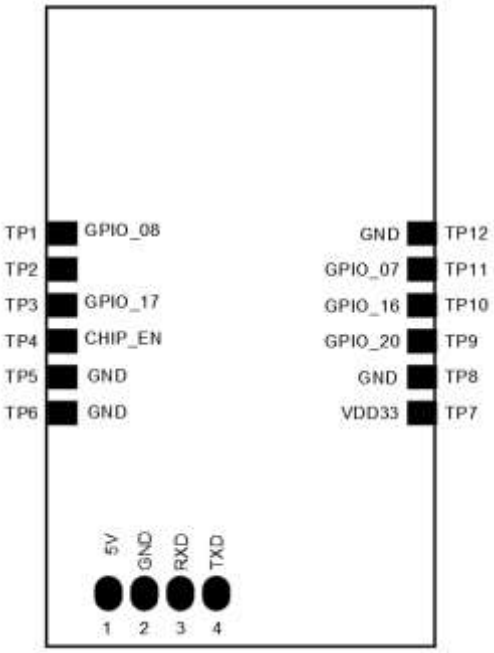

4.2. Pin Definition

Table 1 Pin Definition

Pin No.	Name	I/O Type	Function Description
1	VDD_5	Power	5V Power Input
2	VSS	GND	GND
3	GPIO_21	I/O	UART_RXD
4	GPIO_22	I/O	UART_TXD

Table 2 TP Definition

Pin No.	Name	I/O Type	Function Description
TP1	GPIO_8	I/O	ISP mode. If it is at high level during startup, enter ISP burning mode. Refer to **Table 3** for working mode selection.
TP2	NC	I/O	No Connect
TP3	GPIO_17	I/O	
TP4	CHIP_EN	I	Chip Enable
TP5	VSS	Power	GND
TP6	VSS	Power	GND
TP7	VDD	Power	3.3V Input
TP8	VSS	Power	GND

Copyright of Shanghai MXCHIP Information Technology Co., Ltd.

TP9	GPIO_20	I/O	STATUS，mode selection, Refer to Table 3 for working mode selection.
TP10	GPIO_16	I/O	✓ BOOT: mode selection please refer to Table 3 for working mode selection. ✓ LOG_ TXD: is used for debugging information output and should not be adjusted arbitrarily. External 1K resistor pull-down is provided to ensure that the module enters ATE mode while passing LOG_ TXD sending data
TP11	GPIO_07	I/O	LOG_RXD, used for debugging information input, do not adjust arbitrarily
TP12	VSS	Power	GND

Attention:

1. Module working mode selection signal. During the startup phase, the module detects the level of these pins and enters a specific operating state. The corresponding relationship between level and operating mode is shown in Table 3:

Table 3 Working Mode Selection

Working Mode	**TP1 (ISP) Default: 0**	**TP10 (BOOT) Default: 1**	**TP9 (STATUS) Default: 1**
ISP	1	用于数据输出	x
QC	0	0	0
ATE	0	0	1
APP	0	1	x

(1). The QC, ATE, and APP modes are determined by the firmware provided by MXCHIP, and the detection conditions and functions can be adjusted by modifying the firmware. The ISP mode is a fixed hardware feature and cannot be modified.

(2). When the module starts, the hardware and firmware will detect the status of ISP, BOOT, and STATUS to enter the corresponding working mode. Among them:

✓ ISP mode is used for programming through serial port onboard Flash.

✓ QC mode is used to self-check the hardware during production and generate QC information for the production device to check the quality of the module. The serial port for QC information exchange can be defined in the application program, which defaults to the application serial port output with a baud rate of 921600.

✓ In ATE mode, a series of serial port commands are provided to place the radio frequency in a specific transceiver mode, allowing testing and calibration to be carried out through the instrument. ATE interactive serial port is LOG_ UART with a baud rate of 115200bps.

✓ APP is the normal working mode for running applications. Debug serial port LOG_ The default UART baud rate is 2000000.

1. LOG_ RXD/LOG_ TXD is used for debugging the input/output of serial port information. It should not be used during design and should be provided in a convenient way to facilitate software

Copyright of Shanghai MXCHIP Information Technology Co., Ltd.

development.

2. CHIP_ The EN pin is enabled by the chip and is effective at low levels. If not used, it can remain suspended.

3. The processing of chip pins within the module is as follows:

1. CHIP_ EN: 33K pull-up resistor.
2. GPIO_ 08:33K pull-down resistor.

Copyright of Shanghai MXCHIP Information Technology Co., Ltd.

5. Electrical Parameter

5.1. Absolute Electrical Parameters

Running outside the absolute maximum rated value may cause permanent damage to module. Prolonged exposure to maximum rated conditions at the same time can affect the reliability of the module.

Table 4 Absolute maximum parameter

Symbol	Note	Min	Max	Unit
VCC_5–VSS	Input voltage on connector	–0.3	5.5	V
VDD–VSS	Input voltage on test pins	–0.3	3.6	V
V_{IN_5}	Input voltage on any other connector pins	VSS−0.3	VCC_5+0.3	V
V_{IN_33}	Input voltage on any other test pins	VSS−0.3	VDD+0.3	V

5.2. Working Condition

Table 5 Working Temperature

Parameter	Description	Min.	Typical	Max	Unit
Ta	Working Temperature	-30	-	85	℃
V_{DD}	Working Voltage	4.5	5	5.5	V

5.3. Power Consumption of Typical Application

The module current testing environment is based on VDD=5V and is tested in a regular office application environment (the values measured in different testing environments may vary).

Table 6 Power Consumption of Typical Application

Mode		Note	Performance @25°C			
			Min	Typical	Max	Unit
RX	11b	-	-	36	-	mA
	11g	-	-	38	-	
	11n	-	-	38	-	
TX	11b - 11Mbps	Duty 50%	-	85	-	
		Duty 99%	-	156	-	
	11g - 54Mbps	Duty 50%	-	68	-	
		Duty 99%	-	142	-	
	11n - MCS7	Duty 50%	-	62	-	
		Duty 99%	-	136	-	
MCU	Run	Freq@ 192MHz	-	16	-	
	Standby	Freq@<10MHz	-	1.5	-	
Sleep	PDS7	Fast recover	-	8.4	-	uA
Hibernate	HBN	RTC or GPIO	-	0.4	-	
Shut down	-	-	-	0.1	-	

Copyright of Shanghai MXCHIP Information Technology Co., Ltd.

5.4. ESD

Table 7 Electrostatic discharge parameters

Symbol	Name	Name	Level	Max.	Unit
V_{ESD}(HBM)	Electrostatic discharge voltage (Human body model)	TA= +25 °C comply with JESD22-A114	2	2000	V
V_{ESD}(CDM)	Electrostatic discharge voltage (Discharge equipment model)	TA = +25 °C comply with JESD22-C101	II	500	

5.5. RF Parameter

5.5.1. Wi-Fi

Table 8 Wi-Fi RF parameter

Item	Specification
Operating Frequency	2.402~2.480GHz
Channel BW	20MHz
Antenna Interface	1T1R, Single stream
Wi-Fi Standard	IEEE 802.11b/g/n
Modulation Type	11b: DBPSK, DQPSK, CCK for DSSS 11g: BPSK, QPSK, 16QAM, 64QAM for OFDM 11n: MCS0~7, OFDM
Data Rates	802.11b: 1, 2, 5.5 and 11Mbps 802.11g: 6, 9, 12, 18, 24, 36, 48 and 54 Mbps 802.11n: MCS0~7, up to 65Mbps
Antenna type	One U.F.L connector for external antenna PCB printed ANT (Reserved)

Note: The typical values of the following Tx test data are recorded under normal temperature environment and Tx lasts about 20s.

Copyright of Shanghai MXCHIP Information Technology Co., Ltd.

TX performance

Table 9 Output Power

TX Characteristics	Min.	Typical	Max.	Unit
Power@11Mbps, 802.11b	14	16.5	17	dBm
Power@54Mbps, 802.11g	13	14.5	16	dBm
Power@HT20, MCS7,802.11n	11	12.5	14	dBm

Table 10 Frequency error

TX Characteristics	Min.	Typical	Max.	Unit
Frequency Error	-15	-	+15	ppm

Table 11 EVM

TX Characteristics	Min.	Typical	Max.	Unit
EVM@11Mbps, 802.11b	-	-20	-10	dB
EVM@54Mbps, 802.11g	-	-29	-25	dB
EVM@HT20, MCS7,802.11n	-	-30	-27	dB

RX performance

Table 12 RX sensitivity

RX Characteristics	Min.	Typical	Max.	Unit
Minimum Input Level Sensitivity				
PER≦8%@11Mbps,802.11b	-	-88	-	dBm
PER≦10%@54Mbps,802.11g	-	-73	-	dBm
PER≦10%@HT20, MCS7, 802.11n	-	-71	-	dBm

5.5.2. Bluetooth RF parameter

Table 13 Bluetooth TX/RX performance

Item	Min	Typical	Max	Unit
TX_AVERAGE	3	6	8	dBm
Frequency Drift Error	-	-4	-	KHz
Modulation characteristics:				
ΔF1avg	-	250	-	KHz
ΔF2avg/ΔF1avg	-	0.9	-	
ΔF2max	-	220	-	KHz
RX Characteristics				
Minimum Sensitivity	-	-95	-	dBm

Copyright of Shanghai MXCHIP Information Technology Co., Ltd.

6. Antenna Information

The EMC5020 is available in both PCB antenna and external antenna, please refer to the order code. No IPX antenna connector is soldered on the module using the PCB antenna. By connecting an external antenna through an IPX connector, better RF performance can be obtained.

6.1. PCB antenna and usage

6.1.1. On-board PCB antenna parameter

Table 14 on-board PCB antenna parameter

Item	Min.	Typical	Max.	Unit
Frequency	2400		2500	MHz
Impedance		50		Ω
VSWR			2	
Gain	≤2dBi			
Efficiency	>70% or >-1.54dB			

■ PCB Antenna Clearance

When using the PCB antenna on the module, you need to make sure that the motherboard PCB is at least 16mm away from other metallic devices, connectors, PCB through-hole, alignment, and copper cladding. The shaded area in the diagram below indicates that the area needs to be kept away from metal devices, sensors, interference sources, and other materials that may cause signal interference.

Figure 2 Antenna minimum clearance area (unit: mm)

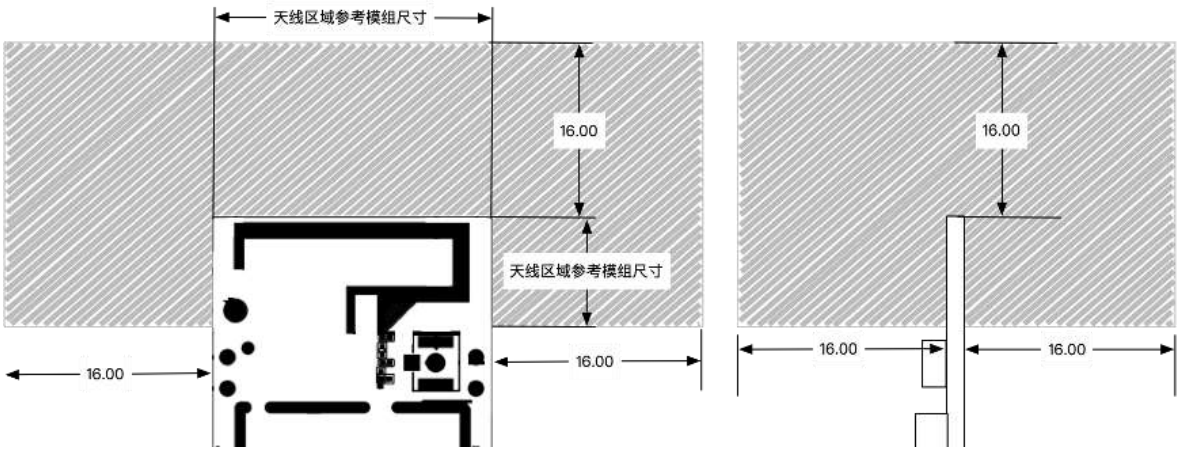

6.2. External antenna parameters and use

Users can choose 2.4G antennas in different form factors with a gain of no more than 2dBi according to the application environment.

The following is a copper antenna for an IPEX connector commonly used by MXCHIP.

Copyright of Shanghai MXCHIP Information Technology Co., Ltd.

Figure 3 Copper tube antenna size

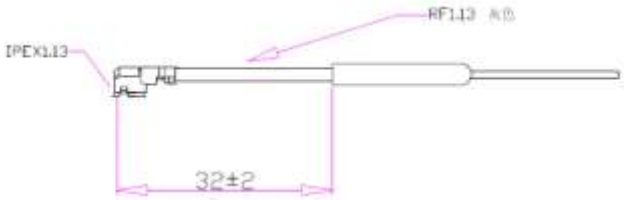

- Frequency range: 2400-2500 MHz
- Input impedance: 50 OHM
- VSWR: < 2.0
- Gain: 2.0 DBI
- Polarization: vertical
- Directionality: Omnidirectional
- Copper tube: 4.4*23mm
- Wire: 1.13 grey wire L-82mm

External antenna IPEX seat size:

Figure 4 Dimension drawing of external antenna connector

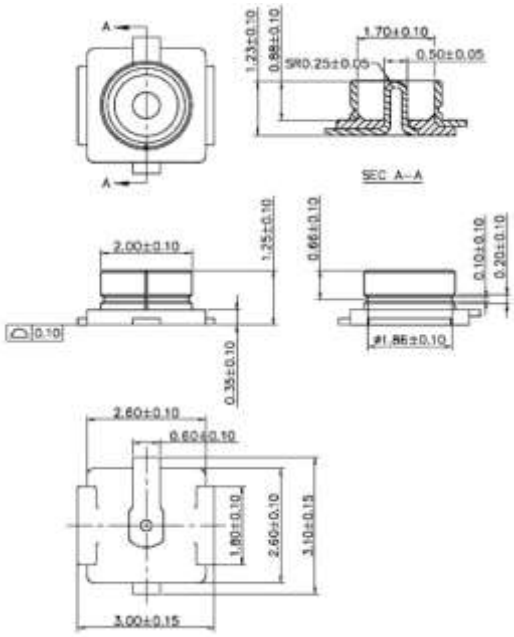

6.2.1. SRRC Important statements

The SRRC type approval number obtained for module models using an external antenna base has the (M) suffix and any module with the (M) suffix is specifically declared as follows.

Type approval of a module does not imply that the end equipment in which the module is embedded or in which it is used complies with the relevant radio regulations or standards, and the end equipment manufacturer is responsible for the conformity of the technical characteristics of the product with the radio regulations or standards.

Copyright of Shanghai MXCHIP Information Technology Co., Ltd.

7. Production Guidelines

MXCHIP stamp port packaging module must be SMT machine patches, module humidity sensitivity grade MSL3, after unpacking more than a fixed time patches to bake module.

- SMT patches require instruments
  - ✓ Reflow bonding machine
  - ✓ AOI detector
  - ✓ 6-8mm suction nozzle
    - Baking requires equipment:
    - Cabinet oven
    - Anti-static, high temperature tray
    - Antistatic and heat resistant gloves

The storage conditions of MXCHIP module are as follows:

- Moisture-proof bags must be stored in an environment with temperature < 30 degree C and

humidity < 85% RH.

- A humidity indicator card is installed in the sealed package.

Figure 5 Humidity Card

After the module is split, if the humidity card shows pink, it needs to be baked.

The baking parameters are as follows:

- The baking temperature is 120℃±5℃ and the baking time is 4 hours.
- The alarm temperature is set to 130℃.
- SMT patches can be made after cooling < 36℃ under natural conditions.
- Drying times: 1 time.
- If there is no welding after baking for more than 12 hours, please bake again.

Copyright of Shanghai MXCHIP Information Technology Co., Ltd.

If the disassembly time exceeds 3 months, SMT process is forbidden to weld this batch of modules, because PCB gold deposition process, over 3 months, pad oxidation is serious, SMT patch is likely to lead to virtual welding, leak welding, resulting in various problems, our company does not assume the corresponding responsibility.

Before SMT patch, ESD (Electrostatic Discharge, Electrostatic Release) protection should be applied to the module.

SMT patches should be made according to the reflow curve. The peak temperature is 250 C.

In order to ensure the qualified rate of reflow soldering, 10% of the first patches should be taken for visual inspection and AOI testing to ensure the rationality of furnace temperature control, device adsorption mode and placement mode, and 5-10 patches per hour are recommended for visual inspection and AOI testing in subsequent batch production.

7.1. Precautions

- Operators of each station must wear static gloves during the entire production process.
- Do not exceed the baking time when baking.
- It is strictly forbidden to add explosive, flammable, or corrosive substances during baking.
- When baking, the module uses a high temperature tray to be placed in the oven to keep the air circulation between each module while avoiding direct contact between the module and the inner wall of the oven.
- When baking, please close the oven door to ensure that the oven is closed to prevent temperature leakage and affect the baking effect.
- Try not to open the door when the oven is running. If it must be opened, try to shorten the time for opening the door.
- After baking, the module should be naturally cooled to <36°C before wearing the static gloves to avoid burns.
- When operating, strictly guard against water or dirt on the bottom of the module.

The temperature and humidity control level of MXCHIP factory module is Level 3, and the storage and baking conditions are based on IPC/JEDEC J-STD-020.

7.2. Secondary reflow temperature curve

Recommended solder paste type: SAC305, lead free. No more than 2 reflow cycles. Peak temperature not to exceed 245°C. The following is a typical furnace temperature profile setting.

Table 15 Typical furnace temperature settings

Furnace settings	Z1	Z2	Z3	Z4	Z5	Z6	Z7	Z8	Z9	Z10
Upper temperature zone setting	135	150	170	175	180	215	250	260	247	200

Copyright of Shanghai MXCHIP Information Technology Co., Ltd.

Lower temperature zone setting	135	150	170	175	180	215	250	260	247	200

Figure 6 Typical secondary reflux temperature profile

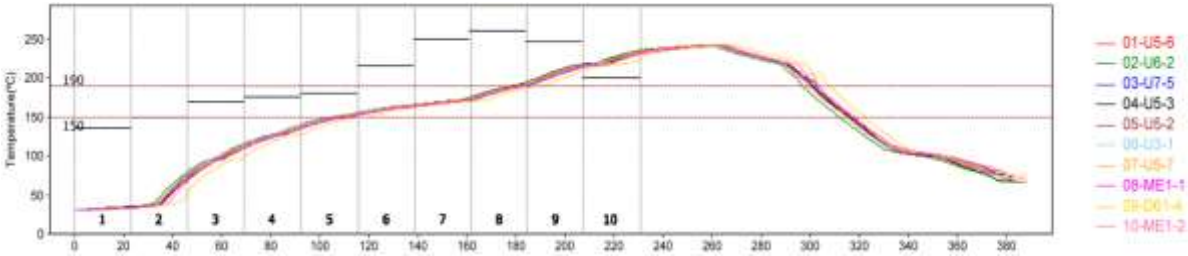

- 30℃～150℃ preheating temperature rise: 0-3℃/s, typical value: 1.2℃/s
- 150℃～190℃ immersion time: 60-100second, typical value：72second
- Peak temperature: 245°C, typical value: 242°C
- Time above 220°C: 50 sec. to 90 sec. Typical value: 70 sec.
- 217℃cooling speed: -3～0℃/s, typical value：-2.0℃/s

Copyright of Shanghai MXCHIP Information Technology Co., Ltd.

7.3. Storage Condition

Figure 7 Storage Conditions Diagram

FCC Warning

8. FCC Warning

Any Changes or modifications not expressly approved by the party responsible for compliance could void the user's authority to operate the equipment.

Note: This equipment has been tested and found to comply with the limits for a Class B digital device, pursuant to part 15 of the FCC Rules. These limits are designed to provide reasonable protection against harmful interference in a residential installation. This equipment generates uses and can radiate radio frequency energy and, if not installed and used in accordance with the instructions, may cause harmful interference to radio communications. However, there is no guarantee that interference will not occur in a particular installation. If this equipment does cause harmful interference to radio or television reception, which can be determined by turning the equipment off and on, the user is encouraged to try to correct the interference by one or more of the following measures:

- Reorient or relocate the receiving antenna.
- Increase the separation between the equipment and receiver.
- Connect the equipment into an outlet on a circuit different from that to which the receiver is connected.
- Consult the dealer or an experienced radio/TV technician for help.

The device has been evaluated to meet general RF exposure requirement. The device can be used in portable exposure condition without restriction.

Copyright of Shanghai MXCHIP Information Technology Co., Ltd.

9. Label

1. MXCHIP: Manufacturer Company Logo
2. Shanghai MXCHIP Information Technology Co., Ltd.: Manufacturer
3. EMC5020-P: Product Main Type
4. CMIIT ID: SRRC Model Authorization ID
5. FCC ID: FCC Certification ID
6. ZI5: Product Auxiliary Model
7. X2137: Production serial number
8. B0F8936C39CA: MAC Address
9. Input: DC 5V 300mA: Operation Voltage and Current
10. QR code: MAC Address QR code
11. : CE Certification logo
12. : Environmental protection sign, indicating no littering in the trash can

Note: Due to production batch and version and other reasons, the above label diagram is for reference only, please prevail in kind.

Copyright of Shanghai MXCHIP Information Technology Co., Ltd.

10. Radiation Exposure Statement

Radiation Exposure Statement Changes or modifications not expressly approved by the party responsible for compliance could void the user’ s authority to operate the equipment. This device complies with part 15 of the FCC rules. Operation is subject to the following two conditions: (1) this device may not cause harmful interference, and (2) this device must accept any interference received, including interference that may cause undesired operation.

This modular complies with FCC RF radiation exposure limits set forth for an uncontrolled environment. This transmitter must not be co-located or operating in conjunction with any other antenna or transmitter.

The module is limited to OEM installation only The OEM integrator is responsible for ensuring that the end-user has no manual instructions to remove or install module If the FCC dentification number is not visible when the module is installed inside another device, then the outside of the device into which the module is installed must also display a label referring to the enclosed module. This exterior label can use wording such as the following: Contains Transmitter Module FCC ID: P53- EMC5020.

When the module is installed inside another device, the user manual of the host must contain below warning statements;

1.1 List of applicable FCC rules

FCC Part 15 Subpart C 15.247 & 15.209

1.2 Specific operational use conditions

The module is a BLE Module

2.4GHz Wi-Fi/BLE Module	**Operation Frequency**	**Number of Channel**	**Modulation**	**Antenna Spec.**
		BLE	BLE	BLE/2.4G Wi-Fi
BLE Module	2402-2480MHz	40	GFSK	Single PCB antenna, 2dBi Max.
WLAN	2402-2480MHz	13	DSSS, OFDM	Single PCB antenna, 2dBi Max.

The module can be used for mobile applications with antennas up to 1dBi. The host manufacturer installing this module into their product must ensure that the final composit product complies with the FCC requirements by a technical assessment or evaluation to the FCC rules, including the transmitter operation. The host manufacturer has to be aware not to provide information to the end user regarding how to install or remove this RF module in the user's manual of the end product which integrates this module. The end user manual shall include all required regulatory information/warning as show in this manual.

1.3 Limited module procedures Not applicable. The module is a Single module and complies with the

Copyright of Shanghai MXCHIP Information Technology Co., Ltd.

requirement of FCC Part 15.212.

1.4 Trace antenna designs Not applicable.

The module has its own antenna, and doesn’t need a host’s printed board microstrip trace antenna etc.

1.5 RF exposure considerations

The module must be installed in the host equipment such that at least 20cm is maintained between the antenna and users’ body; and if RF exposure statement or module layout is changed, then the host product manufacturer required to take responsibility of the module through a change in FCC ID or new application. The FCC ID of the module cannot be used on the final product. In these circumstances, the host manufacturer will be responsible for re-evaluating the end product (including the transmitter) and obtaining a separate FCC authorization.

1.6 Antennas

Antenna Specification are as follows:

Type: Single External antenna Gain: 2dBi . This device is intended only for host manufacturers under the following conditions: The transmitter module may not be co-located with any other transmitter or antenna; The module shall be only used with the internal antenna(s) that has been originally tested and certified with this module. The antenna must be either permanently attached or employa ‘unique’ antenna coupler. As long as the conditions above are met, further transmitter test will not be required. However, the host manufacturer is still responsible for testing their end-product for any additional compliance requirements required with this module installed (for example, digital device emissions, PC peripheral requirements, etc.).

1.7 Label and compliance information

Host product manufacturers need to provide a physical or e-label stating “Contains FCC ID: P53-EMC5020 with their finished product.

1.8 Information on test modes and additional testing requirements

Operation Frequency: 2402-2480MHz

Number of Channel: 40、13

Modulation: GFSK，DSSS,OFDM

Host manufacturer must perfom test of radiated & conducted emission and spurious emission, etc according to the actual test modes for a stand-alone modular transmitter in a host, as well as for multiple simultaneously transmitting modules or other transmitters in a host product. Only when all the test results of test modes comply with FCC requirements, then the end product can be sold legally.

1.9 Additional testing, Part 15 Subpart B disclaimer

The modular transmitter is only FCC authorized for FCC Part 15 Subpart C 15.247 & 15.209 and that the host product manufacturer is responsible for compliance to any other FCC rules that apply to the host not covered by the modular transmitter grant of certification. If the grantee markets their product as being Part 15 Subpart B compliant (when it also contains unintentional-radiator digital circuity), then the

Copyright of Shanghai MXCHIP Information Technology Co., Ltd.

grantee shall provide a notice stating that the final host product still requires Part 15 Subpart B compliance testing with the modular transmitter installed.

Copyright of Shanghai MXCHIP Information Technology Co., Ltd.

11. Sales and Technical Support Information

If you need to consult or purchase this product, please call Shanghai MXCHIP Information Technology Co., Ltd. during office hours.

Office hours: Monday to Friday morning: 9:00-12:00, afternoon: 13:00-18:00

Contact Tel: +86-21-52655026

Address: 9th Floor, Building B, 2145 Jinshajiang Road, Putuo District, Shanghai

Zip code: 200333

Email: sales@mxchip.com

Copyright of Shanghai MXCHIP Information Technology Co., Ltd.