MXCHIP®

Datasheet

EMW3076 Wi-Fi Module

Built-in ARM Cortex-M4F Wi-Fi MCU
2.4G Hz IEEE 802.11 b/g/n, ultra-high integration, rich peripherals

Version：1.0 Date：2020-01-08 Number：DS0157EN

Abstract

- **Input Voltage：2.7V~3.6V**
- **Processor：ARM Cortex-M4 Processor Core**
  - Cortex-M4F core，up to 160MHz
  - 26MHz clock input
  - SWD/JTAG simulation debugger interface
- **Memory**
  - 256K bytes SRAM
  - 24K bytes Boot ROM
  - 512 bytes OTP memory area
  - 2M bytes XIP flash
- **Wi-Fi**
  - IEEE 802.11 b/g/n 1T1R 2.4GHz Single Frequency
  - Built-in power amplifier(PA) with self-calibration
  - Support 802.11e QoS enhancement (WMM)
  - Support WPA/WPA2 PSK，Open/WEP/TKIP/CCMP
  - Support IEEE Power Save mode
- **Rich Peripherals**
  - 16 x GPIO
  - 3 x SPI、2 x I2C、8 x PWM、8 x Timer
  - 3 x UART，Support hardware flow control
  - Up to 8 10-bit ADC channels
  - RTC
- **Operating Temperature：** -40℃ to +125℃
- **Antenna：** On-Board PCB Antenna，or IPEX Connector
- **Application Functions**
  - Support AliOS and MXOS operating system
  - Provide major cloud platforms access SDK
  - Mass production firmware for typical applications such as smart appliances, lighting, and sockets
- **Interface and Dimension**
  - EMW3076: 17.8mm x 20mm, stamp hole or pin
    - ✓ Support external antenna
    - ✓ Typical applications: smart home appliances, IoT data terminals

Copyright of Shanghai MXCHIP Information Technology Co., Ltd.

Order Code

For example, **EMW 3 07 0 -P I 6**

Product Series

EMW=IoT Wi-Fi Module

Product Type

3=Welding type wireless module

Typical target applications and features

07=IOT Application 7 Series

Dimensions, enhancements

0=18mm x 33mm, 2 x 6pin 2.0 Spacing double row stamp hole + 9 pin 2.0 Spacing stamp hole or pin

1=13.8mm x 15mm, 5pin + 6 pin 2.0 Spacing golden finger

2=16mm x 24mm, 2 x 8 pin 2.0 Spacing double row stamp hole

3=15mm x 17.3mm, 7 pin + 7 pin 2.0 Spacing stamp hole or golden finger

5=8.5mm x 13.5mm, 2 pin + 3 pin 2.0 Spacing golden finger

6=18mm x 20.2mm, 5 pin + 6 pin 2.0 Spacing golden finger

RF Interface

P=2.4GHz On-Board PCB Antenna

E=2.4GHz External Antenna IPEX Connector

Flash Capacity

I=2M bytes Flash Memory

J=4M bytes Flash Memory

Operating Temperature

6=Industrial Temperature Range, -40°C~85°C

7= Industrial Temperature Range, -40°C~105°C

8= Industrial Temperature Range, -40°C~12°C

Optional Model

Order Code	Description
EMW3076-PI6	18mm x 20.2mm, Golden finger interface, on-board PCB, 2M bytes flash memory , -40°C~85°C

Copyright of Shanghai MXCHIP Information Technology Co., Ltd.

Parts

Order Code	Description
MXKIT-Base	Development board for all EMW3076 modules
MXKIT-Core-3076	The development board core board for the EMW3076, including the EMW3076-PI6 module. Used with MXKIT-Base
FX-3076	EMW3076 production fixture with accompanying test board：MXKIT-Base, MXKIT-Core-3076
MXFlasher	Offline writer for burning chips such as MOC108, MOC108A, MX1270

Version Update Instructions

Date	Version	Update Contents
2020-01-08	1.0	Initial Document

Copyright Notice

Without permission, it is prohibited to use or copy all or any part of this manual, especially for trademarks, model naming, part numbers and drawings.

Catalog

Abstract **1**
1. Introduction **3**
2. Pin Definition **4**
2.1. Pin Arrangement 4
2.1.1. EMW3076 4
2.2. Pin Definition 1
3. Memory Space Allocation **1**
4. Work Mode Selection **2**
4.1. Hardware Working Mode Selection 2
4.2. Firmware Working Mode Selection 2
5. Electrical Parameter **4**
5.1. Absolute Maximum Parameters 4
5.2. Operating Voltage and Current 4
5.3. Typical Application Power Consumption 4
5.4. Temperature 5
5.5. RF Parameter 5
5.5.1. EMW3071，EMW3076 ..... **错误!未定义书签。**
6. Antenna Information **6**
6.1. PCB Antenna Parameters and Use 6
6.1.1. PCB Antenna Use Points 6
6.2. External Antenna Parameters and Use 6
7. Assembly Size and PCB Package **8**
7.1. Assembly Size Diagram 8
7.2. Recommended Package Drawing 9
8. Reference Circuits and Typical Applications **10**
8.1. IoT Wi-Fi Data Transmission 10
8.2. Intelligent Lighting 11
9. Production Guidelines **15**
9.1. Precautions 16
9.2. Secondary Reflow Temperature Curve 16
9.3. Storage Condition 18
Appendix 1: Sales and Technical Support Information **19**

Table Catalog

Table 1 Pin Definition 1
Table 2 System Storage Space 1
Table 3 Flash Storage Space 1
Table 4 Hardware Working Mode Selection 2
Table 5 Firmware Working Mode Selection 3
Table 6 Absolute Maximum Parameter：Voltage 4
Table 7 Absolute Maximum Parameter：Current 4
Table 8 Operating Parameter：Voltage and Current 4

Copyright of Shanghai MXCHIP Information Technology Co., Ltd.

Table 9 Typical application power consumption 5
Table 10 Storage and Working Temperature 5
Table 11 RF Parameter 5
Table 12 Typical Furnace Temperature Setting 16

Figure Catalog

Figure 1 EMW3076 Hardware Block Diagram 3
Figure 2 EMW3076 Pin Arrangement 4
Figure 3 Module Startup Process 2
Figure 4 PCB Antenna Minimum Clearance Area（unit：mm） 6
Figure 5 Copper Tube Antenna Size 7
Figure 6 External Antenna IPEX Seat Size D diagram 7
Figure 7 EMW3076 View（unit：mm） 8
Figure 8 EMW3076 PCB Package Size（unit: mm） 9
Figure 9 Wi-Fi data Transmission Typical Application Block Diagram 10
Figure 10 5V to 3.3V Power Supply Typical Circuit 10
Figure 11 USB to Serial Port Typical Circuit 11
Figure 12 5V UART Signal Conversion Circuit 11
Figure 13 Intelligent Lighting Application Block 11
Figure 14 Humidity Card 15
Figure 15 Typical Secondary Reflow Temperature Curve 17
Figure 16 Storage Condition Diagram 18

Copyright of Shanghai MXCHIP Information Technology Co., Ltd.

1. Introduction

The EMW3076 series modules are mainly used for IoT data communication. Data collection and control are realized through a rich peripheral interface, and data can be transmitted to the Internet of Things cloud service platform through a Wi-Fi network connection to realize the Internet of Everything. This series of modules is used in a wide range of IoT applications through a variety of different form factors, interface types, antenna interfaces and temperature range.

The module includes a super-integrated Wi-Fi microcontroller MX1270 that integrates a Cortex-M4F core up to 160MHz, 256K bytes of SRAM, 2M bytes of Flash memory, and IEEE 802.11 b/g/ n Standard 2.4 GHz RF. Streamlined peripheral circuitry makes the overall module size and interface design more flexible and easier to control costs. The high-performance processing core and security module greatly improve the speed of networking interaction and reduce the overall power consumption while ensuring data security.

Shanghai MXCHIP provides MXOS and AliOS software platforms to support the development of EMW3076 series modules, providing an efficient development environment, access protocol stacks for various IoT cloud services, rich sample programs and various typical applications.

The following figure shows the hardware block diagram of the EMW3076 module, which mainly includes:

- Wi-Fi Microcontroller MX1270
- Onboard or external antenna
- Power and communication interface

Copyright of Shanghai MXCHIP Information Technology Co., Ltd.

2. Pin Definition

2.1. Pin Arrangement

2.1.1. EMW3076

Figure 2 EMW3076 Pin Arrangement

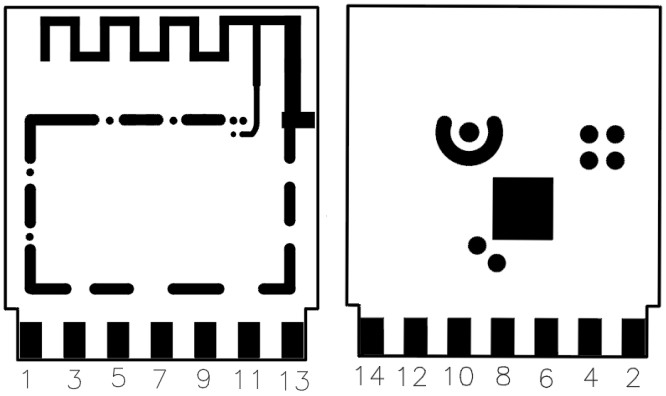

2.2. Pin Definition

Table 1 Pin Definition

Pin Number	Alternate Function 1	Alternate Function 2	Alternate Function 3	Alternate Function 4	Analog Function	Alternate Function 4	Analog Function
1	nRESET	nRESET					
2	P15(1)	SEL2	PWM2	SPI2_MOSI	UART1_RT	GPIO15	
3	P7	GPIO7	SPI0_SCK	SDIO_DATA	UART0_RT	PWM6	ADC_CH3
4	P9	GPIO9	SPI0_MISO	SDIO_DATA	I2C1_SDA	UART1_RXD	ADC_CH5
5	P8	GPIO8	SPI0_MOSI	SDIO_DATA	I2C1_SCL	UART1_TXD	ADC_CH4
6	P6	GPIO6	SPI0_CSN	SDIO_DATA	UART0_CT	PWM4	ADC_CH2
7	P10(1)	SEL3	PWM1	GPIO10	UART2_CT	SPI2_SCK	ADC_CH6
8	P11(2)	GPIO11	PWM3	SDIO_INT	UART2_RT	SPI2_MOSI	ADC_CH7
9	P14(1)	SEL1	PWM0	SPI2_SCK	UART1_CT	GPIO14	
10	P13(2)	GPIO13	GPIO13	SPI2_MISO	UART2_RX	GPIO13	
11	P1	GPIO1	UART0_RXD	SWDIO	SPI1_SCK	PWM7	
12	P0	GPIO0	UART0_TXD	SWCLK	SPI1_CSN	PWM5	
13	VDD	VDD					
14	VSS	VSS					

(1). During the startup phase, the chip processor hardware enters the corresponding operating mode by detecting the state of these pins, see Section 4.1. All other digital pins are in input pull-down mode by default after hardware startup, and the pull-down resistors are 10-20k ohms until the firmware changes their state.

(2). After the startup is completed, when the processor runs the firmware provided by MXCHIP, the firmware detects the status of these pins to enter the corresponding working mode, see section 4.2.

(3). In the firmware provided by MXCHIP, it is usually used as the input of the debugging information and the input of the command, that is, the debugging serial port.

(4). When the IO port is set to the UARTx_RX signal, the hardware should not be grounded, otherwise the processor will not work properly.

Copyright of Shanghai MXCHIP Information Technology Co., Ltd.

3. Memory Space Allocation

The Wi-Fi SOC MX1070 of the EMW3076 module contains the following memories:

- **ROM**

Starting at address 0x0000_0000 is a read-only memory of size 24k bytes. The BOOT image is stored in the ROM, which is mainly used to program the Flash, and performs safe boot or normal startup according to the mode selection, and guides the application image running in the Flash.

- **SRAM**

256kbytes of SRAM, which can be used not only to execute code, store data, but also to share the shared memory of Wi-Fi message buffers. The starting address of the SRAM is 0x0800_0000.

- **Flash**

The MX1070 integrates a 2M byte QPSI Flash through the System-in-Package (SiP) package. The processor uses the cache to retrieve code and data from Flash and supports redirection to encrypt code and data.

- **OTP (One-Time Programmable Memory)**

The MX1070 offers 512-byte One-Time Programmable (OTP) storage. The user available area is: 0xD7 - 0x1F7. Other space pre-stores hardware configuration parameters such as Flash encryption information, MAC address, and RF calibration parameters. The system automatically reads each time after reset.

The system storage space address is assigned as follows:

Table 2 System Storage Space

Name	Start Address	End Address
ROM	0x0000_0000	0x0000_5FFF
SRAM	0x0800_0000	0x0803_FFFF
FLASH	0x1000_0000	0x17FF_FFFF
Peripheral registers	0x4000_0000	0x4001_DFFF
Share mem，MAC/PHY	0x6000_0000	0x61FF_FFFF

Flash Space pre-allocation is as follows：

Table 3 Flash Storage Space

Name	Description	Offset Start	Offset End	Size
Bootloader	Bootloader program for burning	0x0000_0000	0x0000_4FFF	20 Kbytes
System Info	Reserved, system information, please do not use	0x0000_5000	0x0000_5FFF	4 Kbytes
KV Data	Key/Value Data area, read and write with KV component of MXOS	0x0000_6000	0x0000_9FFF	16 Kbytes
Application	Application firmware developed with MXOS	0x0000_A000	0x000F_FFFF	984 Kbytes
OTA	Temporary storage area for OTA data using compression algorithms	0x0010_0000	0x001A_3FFF	656 Kbytes

Copyright of Shanghai MXCHIP Information Technology Co., Ltd.

4. Work Mode Selection

After reset, the module will enter different working states, some of which are realized by code in hardware or ROM, which is called hardware working mode; some are realized by firmware programmed in the module, which is called firmware working mode. The hardware working mode cannot be modified, and the firmware working mode can achieve different functions depending on the firmware being programmed. The firmware provided by MXCHIP usually defines some working modes to facilitate production and testing. After the module is started, first perform hardware initialization, select the hardware working mode, and then boot the firmware to select the firmware working mode.

Figure 3 Module Startup Process

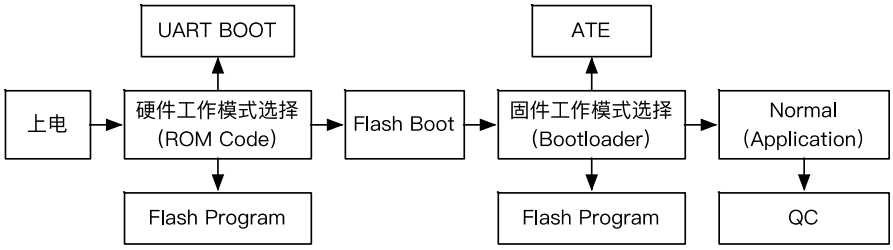

4.1. Hardware Working Mode Selection

The hardware working modes are as follows:

- Flash Boot Mode: Boots the code stored on the Flash.
- UART Boot Mode: After downloading the code from UART1 (P2, P3) to SRAM, boot the code saved in SRAM.
- Flash Program Mode: The working mode of programming the Flash inside the chip directly. Not recommended, this article does not introduce.

Table 4 Hardware Working Mode Selection

Hardware working mode	P10 (SEL3)	P15 (SEL2)	P14 (SEL1)	P16 (SEL)
Flash Boot Mode	0	0	0	0
UART Boot Mode	0	0	1	0
Flash Program Mode	1	0	0	1

Note: If P10, P14, P15, P16 are at a level other than the above list, the chip will enter other unknown modes of operation. The pin does not have external interference and is driven low by default.

4.2. Firmware Working Mode Selection

The firmware working mode is determined by the firmware being burned. The working mode described below is a commonly used function in the firmware provided by MXCHIP and is for reference only. Before the final production, if these functions are useful, a verification test is required. The firmware works in the following modes:

- Normal: The application runs normally.
- Bootloader: Runs and remains in the bootloader. The bootloader can be used to update the application, as described in Section 6.2.

Copyright of Shanghai MXCHIP Information Technology Co., Ltd.

- ATE: Runs the RF test mode, in which the RF transmit power, receive sensitivity, and RF parameters can be tested. Interact with the ATE command using UART1 (P2, P3).
- QC: Run the factory test mode, output QC information through UART0 (P0, P1), and cooperate with the detection program running on the PC, which can be used to verify the firmware version of the module, the login information of the cloud service and the basic hardware functions.

When detecting the pin state, the firmware first sets the mode of P11, P12, and P13 to the input pull-up. Therefore, if the external does not interfere, the read IO state is high, and the default working state is: Normal.

Table 5 Firmware Working Mode Selection

Firmware working mode	P11 (STATUS)	P12 (BOOT)	P13 (EASYLINK)
Normal	No Detection	1	No Detection
Bootloader	1	0	No Detection
ATE	1	0	0
QC	0	0	No Detection

Copyright of Shanghai MXCHIP Information Technology Co., Ltd.

5. Electrical Parameter

5.1. Absolute Maximum Parameters

Operation of the module outside of its absolute maximum ratings may result in permanent damage. At the same time, long-term exposure to the maximum rated conditions will affect the reliability of the module.

Table 6 Absolute Maximum Parameter: Voltage

Symbol	Ratings	Min	Max	Unit
V_{DD}–V_{SS}	Voltage	–0.3	3.6	V
V_{IN}	Input voltage on any other pin	V_{SS}−0.3	V_{DD}+0.3	V

Table 7 Absolute Maximum Parameter: Current

Symbol	Ratings	Max	Unit
I_{VDD}	Total current into V_{DD} power lines (source)	TBD	mA
I_{VSS}	Total current out of V_{SS} ground lines (sink)	TBD	mA
I_{IO}	Output current sunk by any I/O and control pin	TBD	mA
I_{IO}	Output current source by any I/O and control pin	TBD	mA

5.2. Operating Voltage and Current

The module current test environment is based on VDD=3.3V, the CPU is clocked at 52MHz, and UART1 is turned on.

Table 8 Operating Parameter: Voltage and Current

Symbol	Note	Conditions	Specification			
			Min.	Typical	Max.	Unit
V_{DD}	Voltage		2.7	3.3	3.6	V
I_{VDD}	RX Current	V_{DD}=3.3V, CPU@52MHz, UART1 enable	64.29	66.94	71.83	mA
I_{VDD}	TX Current	V_{DD}=3.3V, CPU@52MHz, UART1 enable, 802.11b 11M@18dBm, continuous send		271.86		mA
I_{VDD}	TX Current	V_{DD}=3.3V, CPU@52MHz, UART1 enable, 802.11g 54M@15dBm, continuous send		240.23		mA
I_{VDD}	TX Current	V_{DD}=3.3V, CPU@52MHz, UART1 enable, 802.11n MCS7@13dBm, continuous send		216.41		mA
I_{VDD}	RF Idle	V_{DD}=3.3V, CPU@52MHz, UART1 enable	9.58	9.59	13.43	mA
I_{VDD}	Standby	V_{DD}=3.3V	31.20	31.47	36.41	uA

5.3. Typical Application Power Consumption

The module current test environment is based on VDD=3.3V, the CPU is clocked at 52MHz, and UART1 is turned on.

Copyright of Shanghai MXCHIP Information Technology Co., Ltd.

Table 9 Typical application power consumption

Symbol	Note	Conditions	Specification			
			Min.	Average	Max.	Unit
I_{VDD}	Only MCU	Kernel run, disable Wi-Fi	9.58	9.59	13.43	mA
I_{VDD}	Only MCU	Kernel sleep, disable Wi-Fi	7.24	7.42	13.19	mA
I_{VDD}	MCU&RF	Station mode, no data transmitting	32.8	62.01	252.07	mA
I_{VDD}	MCU&RF	Station mode, enter power save mode	7.72	14.01	249.45	mA
I_{VDD}	MCU&RF	Station mode, send UDP packet per 100ms	32.93	63.02	253.71	mA
I_{VDD}	MCU&RF	Soft AP mode, beacon interval = 100ms	58.61	65.88	252.17	mA
I_{VDD}	MCU&RF	Monitor mode	60.64	64.68	76.55	mA

5.4. Temperature

Table 10 Storage and Working Temperature

Symbol	Ratings	Max	Unit
T_{STG}	Storage temperature	–40 to +125	℃
T_A	Working temperature	-40 to +85/105	℃

5.5. RF Parameter

Table 11 RF Parameter

Item	Specification
Operating Frequency	2.412~2.484GHz
Channel BW	20MHz
Antenna Interface	1T1R, single-stream
Wi-Fi Standard	IEEE 802.11b/g/n
Modulation Type	11b: DBPSK, DQPSK, CCK for DSSS 11g: BPSK, QPSK, 16QAM, 64QAM for OFDM 11n: MCS0~7, OFDM
Data Rates	11b: 1, 2, 5.5 and 11Mbps 11g: 6, 9, 12, 18, 24, 36, 48 and 54 Mbps 11n: MCS0~7, up to 72.2Mbps
Antenna type	PCB printed ANT (Reserve)

Note: The following Tx test data is typically recorded in a normal temperature environment with Tx lasting about 20 seconds.

Copyright of Shanghai MXCHIP Information Technology Co., Ltd.

6. Antenna Information

The EMW3076 has two specifications, PCB antenna and external antenna. Please refer to the order code for ordering. The IPX antenna connector is not soldered to the module using the PCB antenna. Better RF performance can be achieved by connecting an external antenna through an IPX connector.

6.1. PCB Antenna Parameters and Use

6.1.1. PCB Antenna Use Points

When using the PCB antenna on the module, you need to ensure that the distance between the motherboard PCB and other metal devices, connectors, PCB vias, traces, and copper is at least 16mm. The shaded areas in the figure below need to be kept away from metal components, sensors, sources of interference, and other materials that may cause signal interference.

Figure 4 PCB Antenna Minimum Clearance Area（unit：mm）

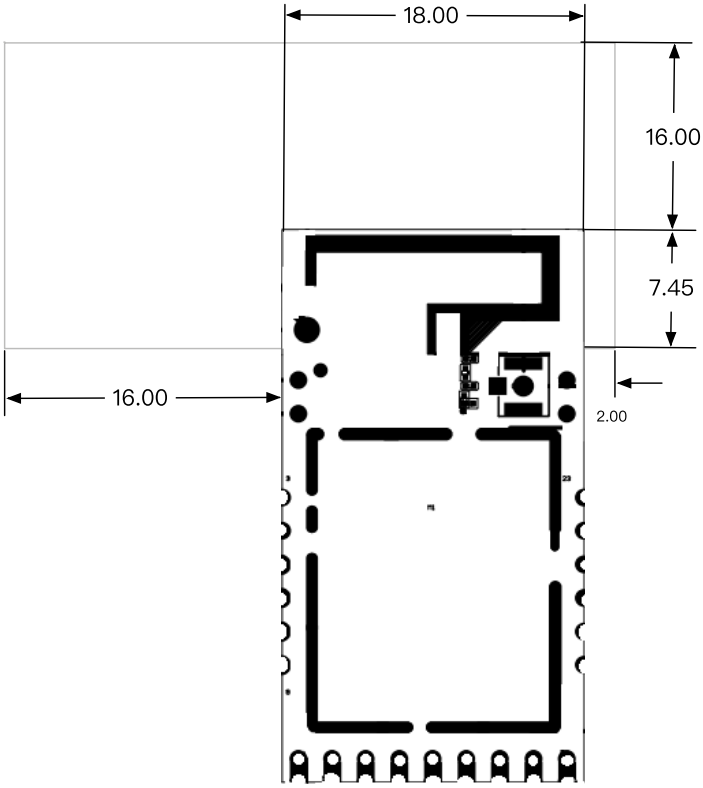

6.2. External Antenna Parameters and Use

Users can select 2.4G antennas with different external dimensions and gains of no more than 2dBi depending on the application environment.

When using an external antenna, be careful to power on the starter module after connecting the antenna. Because the module will perform IQ calibration after power-on, send a single carrier through the PA to detect the signal through the RX loop. If the load is unloaded (the antenna is not connected), it will cause a calibration error, making the output power of the PA abnormal, and forming a large standing wave at the PA output, possibly damaging the internal device.

Copyright of Shanghai MXCHIP Information Technology Co., Ltd.

The following is a copper tube antenna for an IPEX connector commonly used by MXCHIP:

Figure 5 Copper Tube Antenna Size

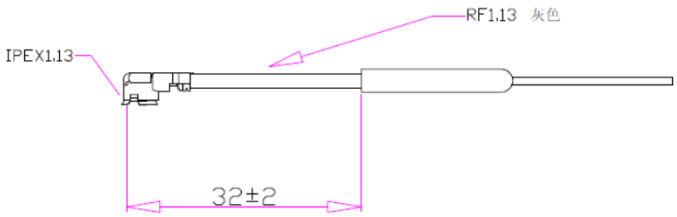

- Frequency range: 2400-2500 Hz
- Input impedance: 50 OHM
- Standing wave ratio: < 2.0
- Gain: 2.0dbi
- Polarization: vertical
- Directionality: Omnidirectional
- Copper tube: 4.4*23mm
- Wire: 1.13 gray line L-82mm

External antenna IPEX seat size:

Figure 6 External Antenna IPEX Seat Size D diagram

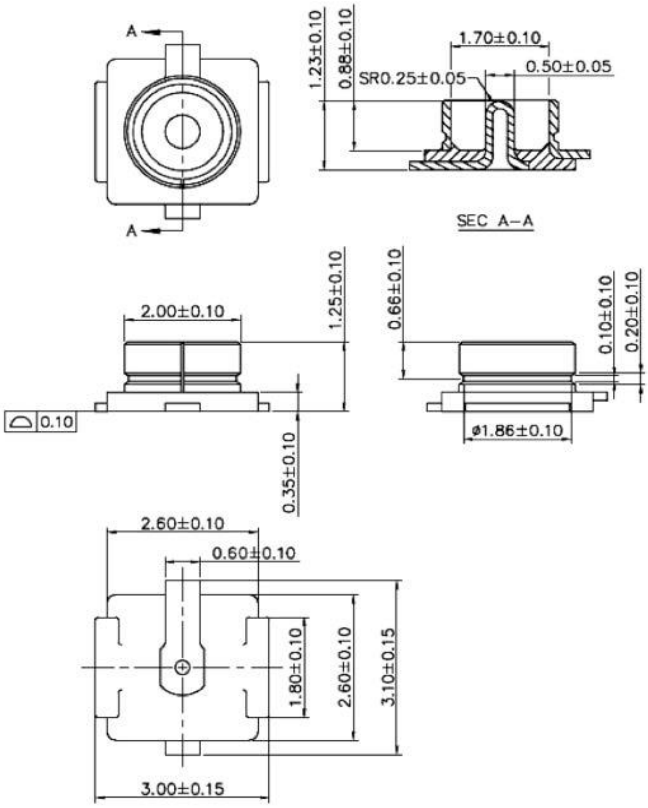

7. Assembly Size and PCB Package

7.1. Assembly Size Diagram

Figure 7 EMW3076 View（unit：mm）

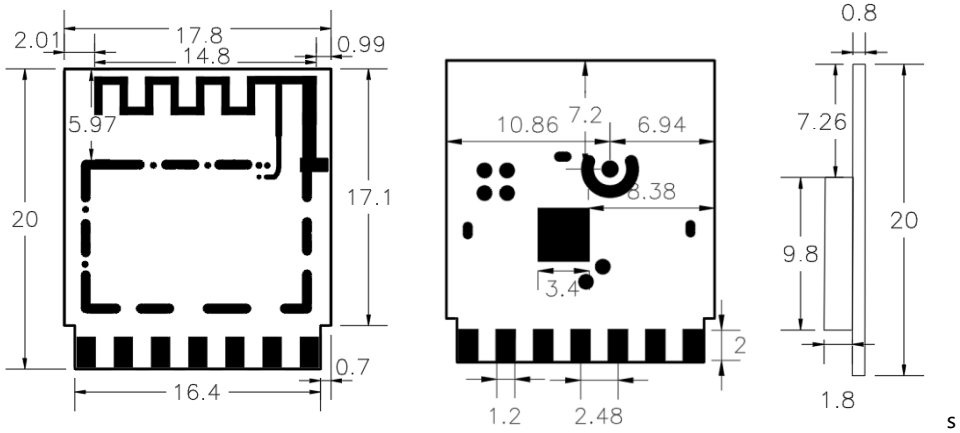

Front View　　Back View　　Side View

s

7.2. Recommended Package Drawing

Figure 8 EMW3076 PCB Package Size（unit: mm）

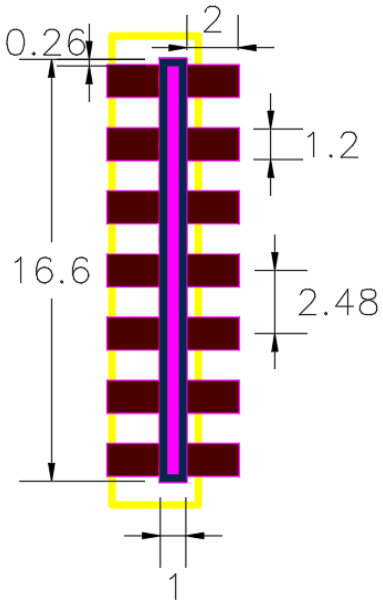

8. Reference Circuits and Typical Applications

8.1. IoT Wi-Fi Data Transmission

The module transmits data through the serial port and the device, and after connecting to the Internet through Wi-Fi, the data is transmitted to the Internet of Things cloud service to realize data collection and remote control. The system block diagram of the application is as follows:

Figure 9 Wi-Fi data Transmission Typical Application Block Diagram

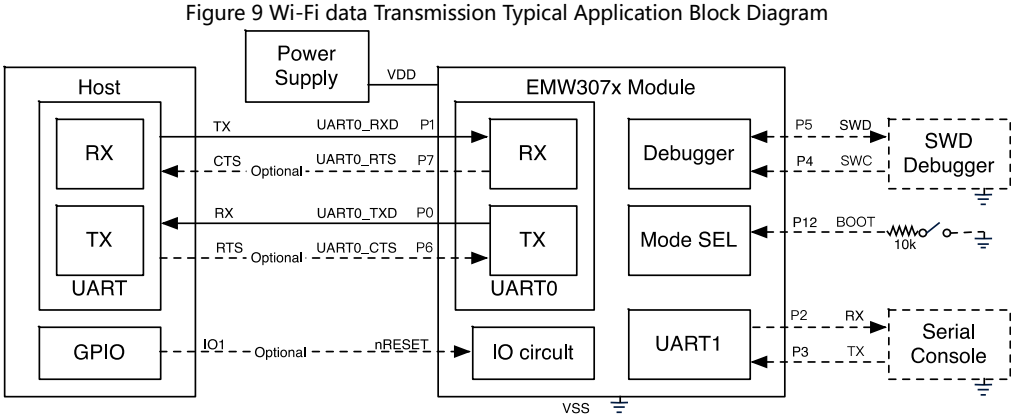

Among them,

- UART0 is used to transfer application data to the host, and UART1 is used for debugging information output and debugging command input.
- The SWD interface can use the emulator to debug and download the firmware in the EMW3076 module.
- After the BOOT signal is grounded and powered up, the module can enter the boot program. In the bootloader, the firmware in the EMW3076 module can be updated via the serial port (UART0/1).

VDD is decoupled by a 10uF (16V) capacitor. A typical 5V to 3.3V supply is shown in Figure 23:

Figure 10 5V to 3.3V Power Supply Typical Circuit

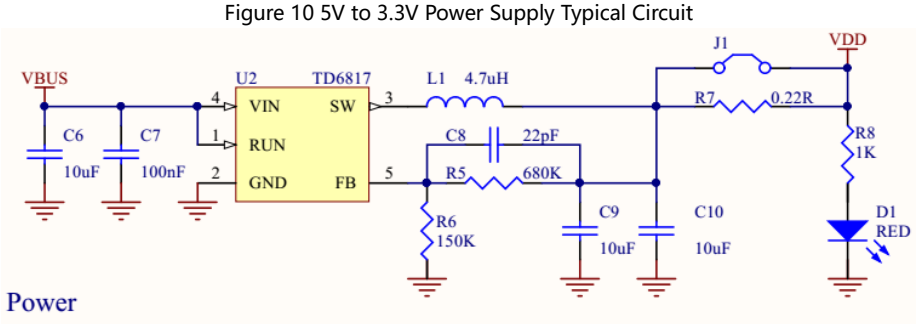

Through the USB to serial port circuit, you can connect to the PC via USB and interact with the module through the serial port terminal. The typical circuit is shown in Figure 24:

Figure 11 USB to Serial Port Typical Circuit

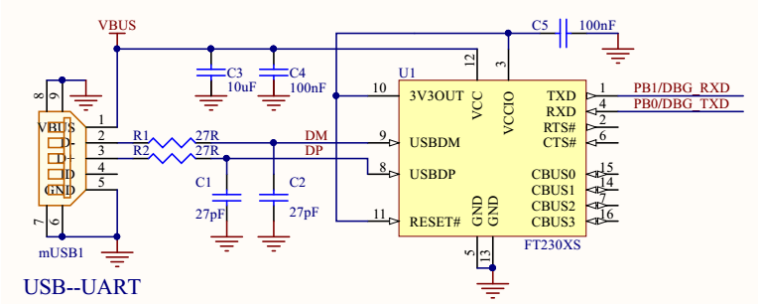

If the host uses 5V power supply and the high-level signal of the serial port is 5V, you need to convert 5V to 3.3V before connecting to the module. A typical circuit is shown in Figure 25:

Figure 12 5V UART Signal Conversion Circuit

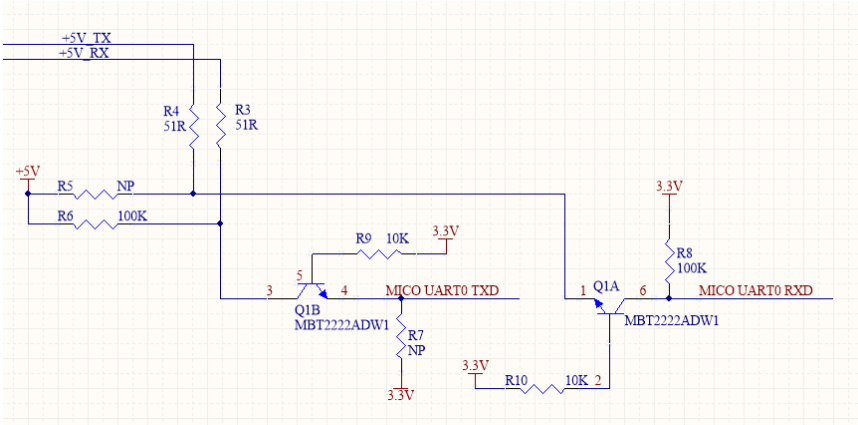

8.2. Intelligent Lighting

The EMW3076 module can control the brightness of LED lights of various colors through the PWM function of IO, and realize the display of various colors and cool and warm colors. The PWM signal can be connected to any color LED, but if you connect according to the specifications shown in Figure 26, you can use the smart lighting firmware provided by MXCHIP to speed up the time to market.

Figure 13 Intelligent Lighting Application Block

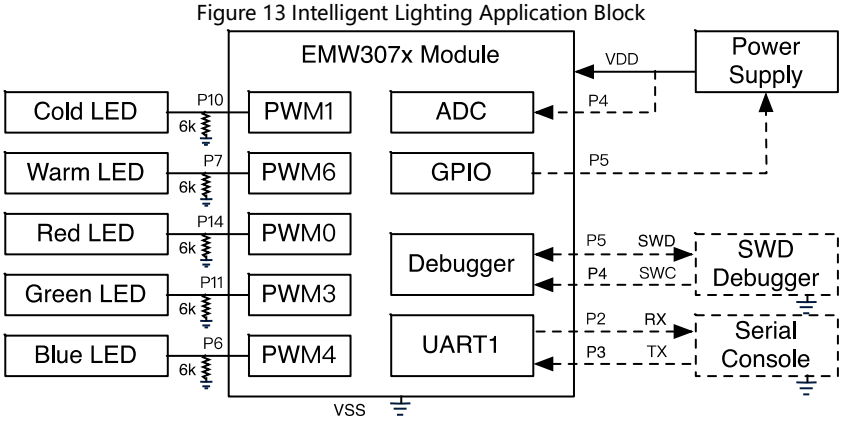

Among them,

If the PWM output signal is externally connected to the LED, it needs to be grounded through a 6K resistor; if it is not connected to the LED, it will be left floating. When the module is running, it will automatically detect the channel of the connected LED light to achieve the corresponding function.

- Optional function: The ADC can detect the power supply voltage and fine tune the brightness of the LED light.
- Optional features: GPIO control power module, which can turn off some power when needed to achieve lower standby power consumption.
- Optional features: Download and debug firmware using the debug interface and debug serial port

Copyright of Shanghai MXCHIP Information Technology Co., Ltd.

9. FCC and IC Information

9.1. FCC Warning

✓ Any Changes or modifications not expressly approved by the party responsible for compliance could void the user's authority to operate the equipment.

✓ Note: This equipment has been tested and found to comply with the limits for a Class B digital device, pursuant to part 15 of the FCC Rules. These limits are designed to provide reasonable protection against harmful interference in a residential installation. This equipment generates uses and can radiate radio frequency energy and, if not installed and used in accordance with the instructions, may cause harmful interference to radio communications. However, there is no guarantee that interference will not occur in a particular installation. If this equipment does cause harmful interference to radio or television reception, which can be determined by turning the equipment off and on, the user is encouraged to try to correct the interference by one or more of the following measures:

✓ - Reorient or relocate the receiving antenna.

✓ - Increase the separation between the equipment and receiver.

✓ - Connect the equipment into an outlet on a circuit different from that to which the receiver is connected.

✓ - Consult the dealer or an experienced radio/TV technician for help.

✓ The device has been evaluated to meet general RF exposure requirement. The device can be used in portable exposure condition without restriction. This device complies with Part 15 of the FCC Rules. Operation is subject to the following two conditions:

✓ (1) this device may not cause harmful interference, and

✓ (2) this device must accept any interference received, including interference that may cause undesired operation.

✓ This equipment complies with FCC radiation exposure limits set forth for an uncontrolled environment. This equipment should be installed and operated with minimum distance 20cm between the radiator & your body.

9.2. IC warning

✓ **- English:**

✓ This device complies with Industry Canada license-exempt RSS standard(s).

✓ Operation is subject to the following two conditions: (1) This device may not cause interference, and (2) This device must accept any interference, including interference that may cause undesired operation of the device.

✓ **- French:**

✓ Le présentappareilestconforme aux CNR d'Industrie Canada applicable aux appareils radio exempts de license. L'exploitationestautorisée aux deux conditions suivantes:

✓ (1) l'appareil ne doit pas produire de brouillage, et

✓ (2) l'utilisateur de l'appareildoit accepter tout brouillageradioélectriquesubi, mêmesi le brouillageest susceptible d'encompromettre le fonctionnement.

Other information

This device complies with part 15 of the FCC Rules. Operation is subject to the following two conditions: (1) This device may not cause harmful interference, and (2) this device must accept any interference received, including interference that may cause undesired operation.

There are more information you should know here:

- Module is limited to OEM installation ONLY.
- OEM integrators is responsible for ensuring that the end-user has no manual instructions to remove or install module.
- Module is limited to installation in mobile or fixed applications, according to Part 2.1091(b).
- Separate approval is required for all other operating configurations, including portable configurations with respect to Part 2.1093 and different antenna configurations.
- Labeling instructions of finished products.

Example: “Contains Transmitter Module FCC ID: P53-EMW3076” or “Contains FCC ID: P53-EMW3076”

Copyright of Shanghai MXCHIP Information Technology Co., Ltd.

10. Production Guidelines

MXCHIP stamp port packaging module must be SMT machine patches, module humidity sensitivity grade MSL3, after unpacking more than a fixed time patches to bake module.

- SMT patches require instruments
  - Reflow bonding machine
  - AOI detector
  - 6-8mm suction nozzle
- Baking requires equipment:
  - Cabinet oven
  - Anti-static, high temperature tray
  - Antistatic and heat resistant gloves

The storage conditions of MXCHIP module are as follows:

- Moisture-proof bags must be stored in an environment with temperature < 30 degree C and humidity < 85% RH.
- A humidity indicator card is installed in the sealed package.

Figure 14 Humidity Card

After the module is split, if the humidity card shows pink, it needs to be baked.

The baking parameters are as follows:

- The baking temperature is 120 5 and the baking time is 4 hours.
- The alarm temperature is set to 130 C.
- SMT patches can be made after cooling < 36 C under natural conditions.
- Drying times: 1 time.
- If there is no welding after baking for more than 12 hours, please bake again.

Copyright of Shanghai MXCHIP Information Technology Co., Ltd.

If the disassembly time exceeds 3 months, SMT process is forbidden to weld this batch of modules, because PCB gold deposition process, over 3 months, pad oxidation is serious, SMT patch is likely to lead to virtual welding, leak welding, resulting in various problems, our company does not assume the corresponding responsibility;

Before SMT patch, ESD (Electrostatic Discharge, Electrostatic Release) protection should be applied to the module.

SMT patches should be made according to the reflow curve. The peak temperature is 250 C. The reflow temperature curve is shown in Chapter 11, Figure 15 Typical Secondary Reflow Temperature Curve.

In order to ensure the qualified rate of reflow soldering, 10% of the first patches should be taken for visual inspection and AOI testing to ensure the rationality of furnace temperature control, device adsorption mode and placement mode, and 5-10 patches per hour are recommended for visual inspection and AOI testing in subsequent batch production.

10.1. Precautions

- Operators of each station must wear static gloves during the entire production process;
- Do not exceed the baking time when baking;
- It is strictly forbidden to add explosive, flammable or corrosive substances during baking;
- When baking, the module uses a high temperature tray to be placed in the oven to keep the air circulation between each module while avoiding direct contact between the module and the inner wall of the oven;
- When baking, please close the oven door to ensure that the oven is closed to prevent temperature leakage and affect the baking effect.
- Try not to open the door when the oven is running. If it must be opened, try to shorten the time for opening the door;
- After baking, the module should be naturally cooled to <36 °C before wearing the static gloves to avoid burns;
- When operating, strictly guard against water or dirt on the bottom of the module;

The temperature and humidity control level of MXCHIP factory module is Level3, and the storage and baking conditions are based on IPC/JEDEC J-STD-020.

10.2. Secondary Reflow Temperature Curve

Solder paste type is recommended: SAC305, lead free. The number of reflows does not exceed 2 times. The peak temperature does not exceed 245 °C. The following is a typical furnace temperature profile setting.

Table 12 Typical Furnace Temperature Setting

Welding furnace setting	Z1	Z2	Z3	Z4	Z5	Z6	Z7	Z8	Z9	Z10

Upper temperature zone setting	135	150	170	175	180	215	250	260	247	200
Lower temperature zone setting	135	150	170	175	180	215	250	260	247	200

Figure 15 Typical Secondary Reflow Temperature Curve

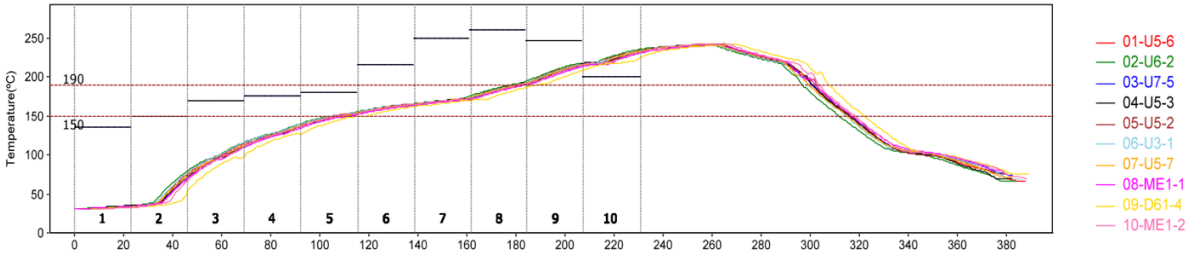

- Preheating temperature rise from 30 ° C to 150 ° C: 0-3 ° C / s, typical value: 1.2 ° C / s
- 150 ° C ~ 190 ° C immersion temperature: 60-100 seconds, typical value: 72 seconds
- Peak temperature: 245 ° C, typical value: 242 ° C
- Time above 220°C: 50 seconds to 90 seconds, typical value: 70 seconds
- 217 ° C cooling rate: -3 ~ 0 ° C / s, typical value: -2.0 ° C / s

Copyright of Shanghai MXCHIP Information Technology Co., Ltd.

10.3. Storage Condition

Figure 16 Storage Condition Diagram

CAUTION

This bag contains
MOISTURE-SENSITIVE DEVICES

LEVEL **3**

If Blank, see adjacent bar code label

1. Calculated shelf life in sealed bag: 12 months at < 40°C and < 90% relative humidity (RH)
2. Peak package body temperature: 260 °C
   If Blank, see adjacent bar code label
3. After bag is opened, devices that will be subjected to reflow solder or other high temperature process must
   a) Mounted within: 168 hrs. of factory conditions
   If Blank, see adjacent bar code label
   ≤ 30°C/60%RH, OR
   b) Stored at <10% RH
4. Devices require bake, before mounting, if:
   a) Humidity Indicator Card is > 10% when read at 23 ± 5°C
   b) 3a or 3b not met.
5. If baking is required, devices may be baked for 48 hrs. at 125 ± 5°C

   Note: If device containers cannot be subjected to high temperature or shorter bake times are desired, reference IPC/JEDEC J-STD-033 for bake procedure

Bag Seal Date: _____
If Blank, see adjacent bar code label

Note: Level and body temperature defined by IPC/JEDEC J-STD-020

Appendix 1: Sales and Technical Support Information

If you need to consult or purchase this product, please call Shanghai MXCHIP Information Technology Co., Ltd. during office hours.

Office hours: Monday to Friday morning: 9:00 to 12:00, afternoon: 13:00 to 18:00

Contact Tel: +86-21-52655026

Address: 9th Floor, No. 5, Lane 2145, Jinshajiang Road, Putuo District, Shanghai

Zip code: 200333

Email: sales@mxchip.com

Copyright of Shanghai MXCHIP Information Technology Co., Ltd.