Datasheet

EMW3080(A)/EMW3080(B)

Embedded encryption security Wi-Fi module

Vision：1.1 **Date：2017-02-13** **Number: DS0069CN**

Abstract

Features

- Support 802.11b/g/n, integrate ARM-CM4F,WLAN MAC/Baseband/RF
- 256KB RAM/ 2MB FLASH
- Working Voltage: DC 3.0-3.6V
- Maximum transmission rate up to 72.2 Mbps with 20 MHz bandwidth.
- Maximum transmission rate up to 150 Mbps with 40 MHz bandwidth.

- EMW3080B is standard module；EMW3080A has hardware encryption. Improve the security level of Cloud connection and firmware protection. Security level in accordance with CC EAL5+ AVA_VAN5
- EMW3080(A)Hardware Encryption Features
  - Encrypt firmware of clients to prevent cracking
  - Digital signature is used in firmware to ensure integrity and legality, preventing being tampering or replaced in OTA.
  - Automatically generate private key to save the certificate issued from the cloud, the cloud can identify the legality of the device to prevent illegal, counterfeit, non-secure accessing.
  - Prevent hackers to obtain sensitive data and code
- Wi-Fi Features
  - Support 802.11b/g/n，HT-40
  - Support Station, Soft AP, Station+Soft AP
  - Support EasyLink，Alink，Joinlink
- Antenna: PCBor IPX (Optional)
- Peripherals：
  - 2xUART
  - 2x I2C
  - 1x SPI
  - 1x SWD
  - 6x PWM
  - Up to 13GPIOs
- Operating Temperature：-20℃ to +85℃

Application

- Intelligent lighting
- Intelligent Transportation
- Smart Home Application
- industrial automation
- Intelligent Security

Module Type

Type	Illustration
EMW3080(AP)	Hardware Encryption, PCB
EMW3080(AE)	Hardware Encryption, IPEX
EMW3080(BP)	No Hardware Encryption, PCB
EMW3080(BE)	No Hardware Encryption, IPEX

上海庆科 禁止复制

Hardware Block

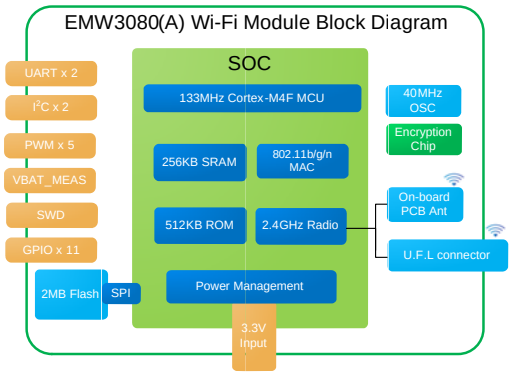

EMW3080(A)

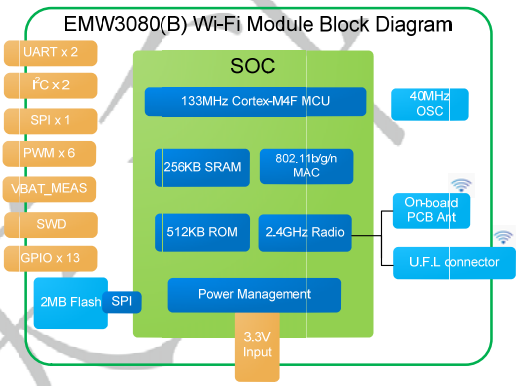

EWM3080(B)

Copyright Notice

Mxchip copyrights this specification. No part of this specification may be reproduced in any form or means, without the prior written consent of Mxchip.

上海庆科 禁止复制

Vision Illustration

Date	Vision	Details
2017-01-16	1.0	Initial document
2017-02-13	1.1	Update label, package, RF reference, encryption. Add BOOT/EASYLINK description

上海庆科 禁止复制

Content

Abstract 1
Vision Illustration 1
1. Product Introduction 4
1.1 EMW3080 LABEL INFORMATION 5
1.2 PIN ARRANGEMENT 6
1.3 PIN DEFINITION 8
1.3.1 EMW3080 Package Definition 8
1.3.2 EMW3080 Pin Definition 8
2. Electrical Parameters 10
2.1 OPERATING CONDITIONS 10
2.2 POWER PARAMETERS 10
2.3 WORKING ENVIRONMENT 11
2.4 ELECTROSTATIC DISCHARGE 11
3. RF parameters 12
3.1 BASIC RF PARAMETERS 12
3.2 TX PERFORMANCE ..... 错误！未定义书签。
3.2.1 Transmit performance of IEEE802.11b mode ..... 错误！未定义书签。
3.2.2 Transmit performance of IEEE802.11g mode ..... 错误！未定义书签。
3.2.3 Transmit performance of IEEE802.11n-HT20 mode ..... 错误！未定义书签。
3.3 RX RECEIVE SENSITIVITY 12
3.3.1 IEEE802.11b Mode 12
3.3.2 IEEE802.11g Mode 13
3.3.3 IEEE802.11n-HT Mode 13
4. Antenna Information 15
4.1 ANTENNA TYPE 15
4.2 PCB ANTENNA CLEARANCE ZONE 15
4.3 EXTERNAL ANTENNA CONNECTOR 17
5. Assembly Information and Production Guidance 18
5.1 ASSEMBLY SIZE 18
5.2 PRODUCTION GUIDANCE（IMPORTANT） 19
5.3 CONSIDERATIONS 20
5.4 STORAGE CONDITION 21
5.5 TEMPERATURE CURVE OF SECONDARY REFLOW 22
6. Reference Circuit 23
7. Module MOQ and Package Information 25
8. Sales Information and Technical Support 26

Figure Content

Figure 1 EMW3080 Label Information 6

上海庆科 禁止复制

Figure 2 DIP Package Size 7
Figure 3 LGA Package Size 7
Figure 4EMW3080 Package Definition 8
Figure 5Minimum Clearance Zone of PCB Antenna (Unit: mm) 16
Figure 6 Size of External Antenna Connector 17
Figure 7 EMW3080Side View (Unit: mm) 18
Figure 8 Humidity Card 19
Figure 9 Storage Condition 21
Figure 10 Temperature Curve of Secondary Reflow 22
Figure 11 Power Source Circuit 23
Figure 12USB to UART 23
Figure 13External Interface Circuit of EMW3080 24
Figure 14 3.3V UART- 5V UART Convert Circuit 24

Table Content

Table 1 EMW3080 Pin Definition 8
Table 2 Range of input voltage 10
Table 3Absolute maximum voltage rating 10
Table 4EMW3080 2.2 Power Parameters 10
Table 5Temperature and humidity condition 11
Table 6 Electrostatic Discharge Parameters 11
Table 7Radio-frequency standards 12
Table 8CCK_11 transmit performance parameters of IEEE802.11b mode ..... 错误！未定义书签。
Table 9OFDM_54 transmit performance parameters of IEEE802.11g mode ..... 错误！未定义书签。
Table 10MCS7 transmit performance parameters of IEEE802.11n-HT20 mode ..... 错误！未定义书签。
Table 11 MCS7 Transmit Performance of IEEE802.11n-HT 40MHz mode ..... 错误！未定义书签。
Table 12Receive Sensitivity of IEEE802.11b Mode with Bandwidth 20MHz(dBm) 12
Table 13 Receive Sensitivity of IEEE802.11g Mode with Bandwidth 20MHz(dBm) 13
Table 14 Receive Sensitivity of IEEE802.11n-HT20 Mode with Bandwidth 20MHz(dBm) 13
Table 15 Receive Sensitivity of IEEE802.11n-HT40 Mode (dBm) 14

上海庆科 禁止复制

1. Product Introduction

EMW3080 is a cost-effective embedded Wi-Fi module released by MXCHIP with high integrating ARM CM4F, WLAN MAC/Baseband/RF. Maximum frequency 133MHz with 256KB SRAM and 2M FLASH. Power supply is DC 3.3V. Installation modes are LGA SMT and Pin Connection. Peripheral: 2xUART / 1x SPI /2x I2C / 6x PWM / Up to 13 GPIOs.

EMW3080 operates MiCO 3.0 IoT operating system, supporting Micoder 1.0 development system. Provide fast, stable and secure end-to-end cloud links to users with integrate TCP/IP protocol stack, various security encryption algorithm, intelligent cloud such as MXCHIP easylink/Alink 1.1/Joinlink 3.0/Hilink/One Net/Gome/Suning, oversea cloud such as AWS/Ayla/Azure/IBM Watson/Google/Apple Homekit.

EMW3080 (A): Provide securityencryption chip to the integrity and legality and cloud communication safety of client firmware.

EMW3080 (B): Abundant peripherals and memory to supply most application and multi-cloud requirement.

Hardware diagram is shown below with four main parts:

- CM4F main core
- WLAN MAC/BB/RF/ANT
- Hardware encryption
- Power management

With:

1. ARM CM4FCPU with 133MHz maximum frequency and 256KB SRAM and 2M FLASH. Support high speed UART, I2C, SPI, PWM and multi-GPIO.
2. 2MB SPI Flash is used for custom firmware development
3. Support PCB antenna and IPEX
4. Input voltage:DC 3.3V

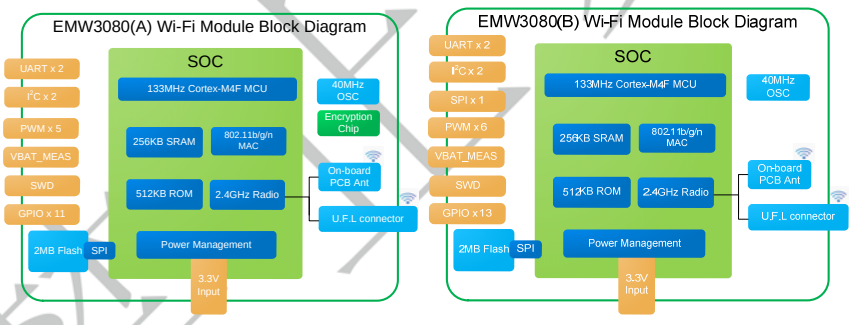

EMW3080 Hardware block

	EMW3080(A)	EMW3080(B)
Encryption security chip	Inside	External support
CPU	ARM CM4F	
CPU Maximum Speed	133MHz	133MHz
SRAM	256KB	256KB
Flash（QSPI 100MHz）	2MB（Support XIP CACHE running and decrypting）	
UART (Maximum 6Mbps)	2	2
I2C (400KHz)	2	2
SPI (31.25MHz)	None	1
PWM (Maximum 4MHz)	5	6
SWD debug port	1	1
Debug port	1	1
GPIO(Output current 4mA)	11	13

1.1 EMW3080 Label Information

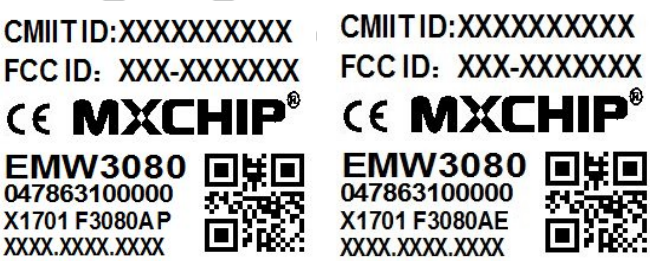

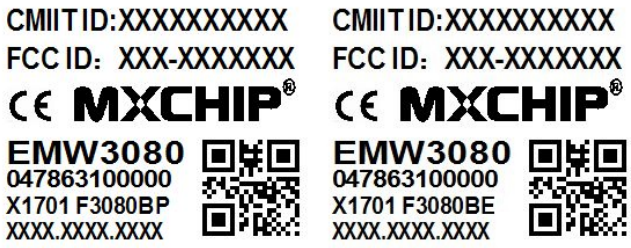

Figure1EMW3080 Label Information

Label Information**:**

CMIIT ID:XXXXXXXX : SRRC approval number

FCC ID:XXX-XXXXXXX :FCC certification information

CE: CE authenticationlog

EMW3080: Module type

047863100000：MAC address(Each module has a unique MAC address)

F3080AP /F3080AE: Sub model type of module A, PCB antenna or IPEX

F3080BP /F3080BE: Sub model type of module B, PCB antenna or IPEX

X1701：production batch

XXXX.XXXX.XXXX : SN series number

1.2 Pin Arrangement

EMW3080 has LGA package and DIP package, DIP package (as shown in figure 2) could effectively reduce the quality risk of second patch；LGA package (as shown in figure 3) is easy to debug, provide multi-choice for customers.

Solder mask openness has the same size with land. The width of steel mesh is suggested to be 0.12mm to 0.14mm in SMT.

上海庆科 禁止复制

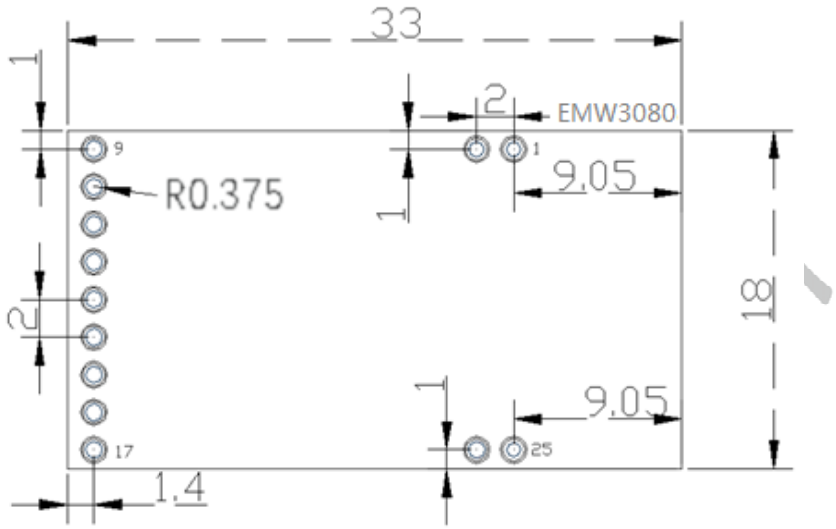

Figure2DIP Package Size

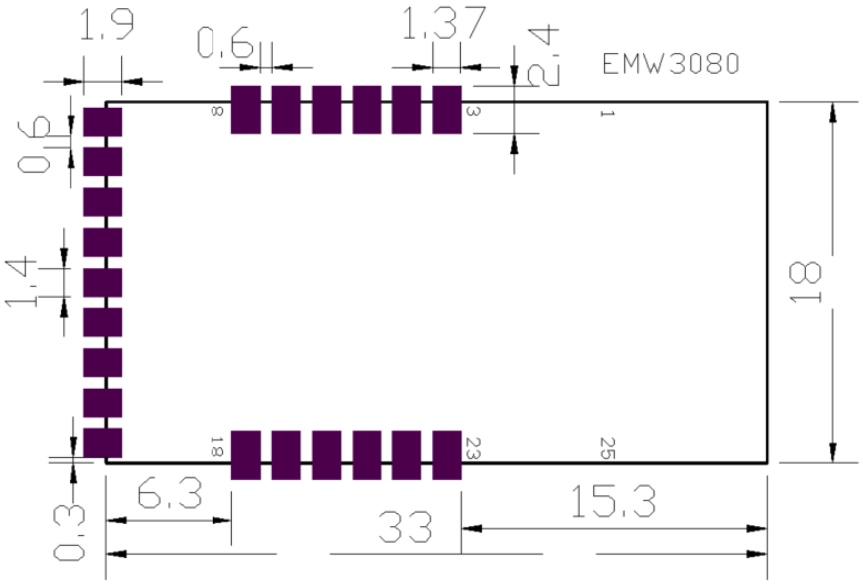

Figure3 LGA Package Size

1.3 Pin Definition

1.3.1 EMW3080Package Definition

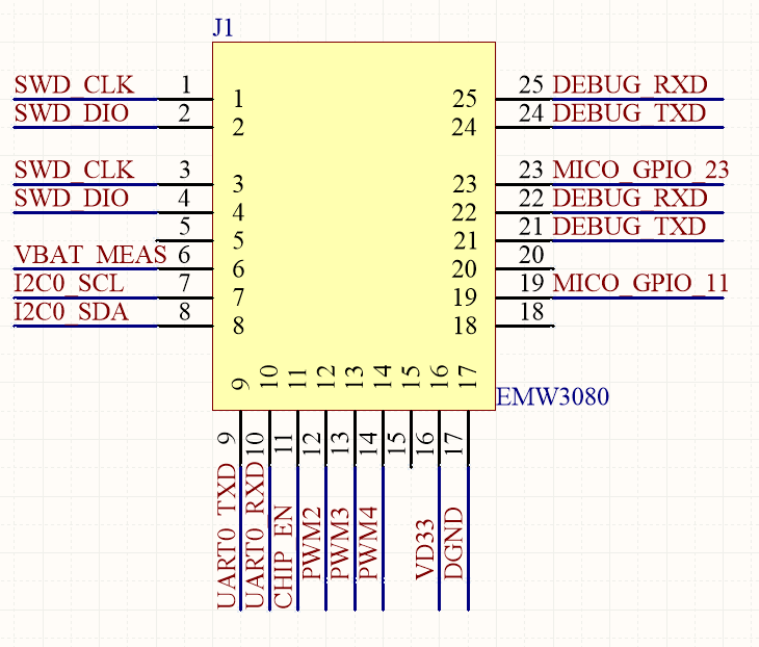

Figure4EMW3080 Package Definition

1.3.2 EMW3080 Pin Definition

Table1EMW3080 Pin Definition

Pin number	FUNCTION1	FUNCTION2	FUNCTION3	FUNCTION4	FUNCTION5	FUNCTION6
1, 3	MICO_GPIO_1			MICO_PWM1		SWCLK
2, 4	MICO_GPIO_2			MICO_PWM2		SWDIO
5	NC					
6	VBAT MEAS					
7	MICO_GPIO_7	MICO_I2C0_SCL	MICO_UART0_RTS	MICO_PWM6	MICO_SPI1_MISO	
8	MICO_GPIO_8	MICO_I2C0_SDA	MICO_UART0_CTS		MICO_SPI1_CS	
9	MICO_GPIO_9	MICO_I2C1_SDA	MICO_UART0_TXD	MICO_PWM1	MICO_SPI1_MOSI	
10	MICO_GPIO_10	MICO_I2C1_CLK	MICO_UART0_RXD		MICO_SPI1_CLK	
11	CHIP_EN					
12	MICO_GPIO_12			MICO_PWM3		
13	MICO_GPIO_13			MICO_PWM4		

14	MICO_GPIO_14			MICO_PWM5		
15	NC					
16	VDD					
17	GND					
18	NC					
19	MICO_GPIO_19					
20	NC					
21, 24	MICO_GPIO_21	MICO_I2C0_SDA	MICO_UART1_TXD	MICO_PWM4		
22, 25	MICO_GPIO_22	MICO_I2C0_SCL	MICO_UART1_RXD	MICO_PWM5		
23	MICO_GPIO_23					

Illustration：**words in black color** is the common pins in both A and B, words in blue color is unique pins of B module. Compare to A module, EMW3080(B) has four pins: PIN 7,8,9,10 with function: traffic control of UART, SPI function,PWM output and GPIO.

PIN 19 is used as BOOT，PIN23 is used as EASYLINK, please do not use pin 19 and 23 in hardware 硬件 design. Please contact engineer of MXCHIP if it is necessary to use the two pins.

PIN21/24should be in high voltage or NC when power on,please aware it when designing circuit.

CHIP_EN could not be set NC, the other pins should not be set NC.

上海庆科 禁止复制

2. Electrical Parameters

2.1 Operating Conditions

EMW3080would be unstable when input voltage is less than the lowest rated voltage.

Table2Range of input voltage

Symbol	Illustration	Condition	Details			
			Minimum	Typ	Maximum	Unit
VDD	Power Supply		3.0	3.3	3.6	V

There would be permanent damage in hardware if the device operates at the voltage over rated value. Meanwhile, reliability could be influenced when the device has a long-term operating at maximum voltage.

Table3Absolute maximum voltage rating

Symbol	Description	Minimum	Typ	Unit
VDD	Module input voltage	–0.3	3.6	V
VIN	GPIO input voltage	−0.3	3.6	V

2.2 Power Parameters

Table4EMW3080 2.2 Power Parameters

Status	Current（3V3）	Description
WIFIInitialization	26.91mA	Enable WIFI, low power consumption
Connect WIFI	47.71mA	Enable WIFI,low power consumption
UDPtransmission	168.37mA	Disable WIF, low power consumption
SoftAP	121.48mA	SoftAPconnect to internet
Easylink	122.84mA	Process of module network distribution
Standby	10.45uA	Ultra low standby power mode

Actual working current is variable at different operating mode. Maximum operating current 300 mA 。

2.3 Working Environment

Table5Temperature and humidity condition

Symbol	Name	Maximum	Unit
TSTG	Storage Temperature	-55 to +125	℃
TA	Operation Temperature	-20 to +85	℃
Humidity	Non-condensing, Relative humidity	95	%

2.4 Electrostatic Discharge

Table6Electrostatic Discharge Parameters

Symbol	Name	Details	Level	Maximum	Unit
V_{ESD}(HBM)	Electrostatic discharge voltage (Human module)	TA= +25 °C , JESD22-A114	2	2000	V
V_{ESD}(CDM)	Electrostatic discharge voltage (Discharge device module)	TA = +25 °C , JESD22-C101	II	500	

上海庆科 禁止复制

3. RF parameters

3.1 Basic RF parameters

Table7Radio-frequency standards

Name		Illustration
Working frequency		2.412~2.484GHz
Wi-Fi wireless standard		IEEE802.11b/g/n20/n40
Maximum output power		18dBm
Data transmission rate	20MHz	11b：1,2,5.5,11Mbps 11g:6,9,12,18,24,36,48,54Mbps 11n: MCS0~7,72.2Mbps
	40MHz	11n：MCS0~7,150Mbps
Antenna type		PCB(Default) IPX (Optional)

3.2 RX Receive Sensitivity

3. 2. 1 IEEE802.11b Mode

Table8Receive Sensitivity of IEEE802.11b Mode with Bandwidth 20MHz(dBm)

Rate / Channel	11M	1M
IEEE spec	-76dBm	-83dBm
1	-90dBm	-100dBm
2	-90dBm	-100dBm
3	-90dBm	-100dBm
4	-90dBm	-100dBm
5	-90dBm	-100dBm
6	-90dBm	-100dBm
7	-90dBm	-100dBm
8	-90dBm	-100dBm
9	-90dBm	-100dBm
10	-90dBm	-100dBm
11	-90dBm	-100dBm
12	-90dBm	-100dBm

上海庆科 禁止复制

Rate / Channel	11M	1M
13	-90dBm	-100dBm

3.2.2 IEEE802.11g Mode

Table9Receive Sensitivity of IEEE802.11g Mode with Bandwidth 20MHz(dBm)

Rate / Channel	54M	6M
IEEE spec	-65dBm	-82dBm
1	-76dBm	-92dBm
2	-76dBm	-92dBm
3	-76dBm	-92dBm
4	-76dBm	-92dBm
5	-76dBm	-92dBm
6	-76dBm	-92dBm
7	-76dBm	-92dBm
8	-76dBm	-92dBm
9	-76dBm	-92dBm
10	-76dBm	-92dBm
11	-76dBm	-92dBm
12	-76dBm	-92dBm
13	-76dBm	-92dBm

3.2.3 IEEE802.11n-HT Mode

Table10Receive Sensitivity of IEEE802.11n-HT20 Mode with Bandwidth 20MHz(dBm)

Channel / Rate	MCS7	MCS0
IEEE spec	-64dBm	-82dBm
1	-73dBm	-92dBm
2	-73dBm	-92dBm
3	-73dBm	-92dBm
4	-73dBm	-92dBm
5	-73dBm	-92dBm
6	-73dBm	-92dBm
7	-73dBm	-92dBm

上海庆科 禁止复制

Channel Rate	MCS7	MCS0
8	-73dBm	-92dBm
9	-73dBm	-92dBm
10	-73dBm	-92dBm
11	-73dBm	-92dBm
12	-73dBm	-92dBm
13	-73dBm	-92dBm

Table11Receive Sensitivity of IEEE802.11n-HT40 Mode(dBm)

Rate / Channel	MCS7	MCS0
IEEE spec	-64dBm	-82dBm
3	-69dBm	-89dBm
4	-69dBm	-89dBm
5	-69dBm	-89dBm
6	-69dBm	-89dBm
7	-69dBm	-89dBm
8	-69dBm	-89dBm
9	-69dBm	-89dBm
10	-69dBm	-89dBm
11	-69dBm	-89dBm

上海庆科 禁止复制

4. Antenna Information

4.1 Antenna Type

EMW3080has two type of antenna: EMW3080(AP/BP) and EMW3080(AE/BE)

EWM3080（AP）

EMW3080(BP)

EMW3080(AE)

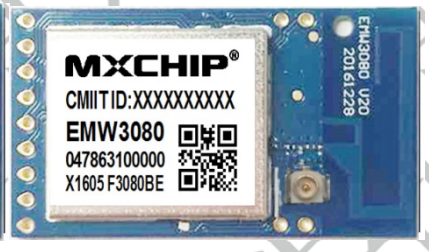

EMW3080(BE)

4.2 PCB Antenna Clearance Zone

Main PCB should have a distance over 16mm with other metal elements when using PCB antenna in Wi-Fi device. Shadow parts in the figure below should keep away from metal elements, sensor, interference source and other material that could cause signal interference.

禁止复制

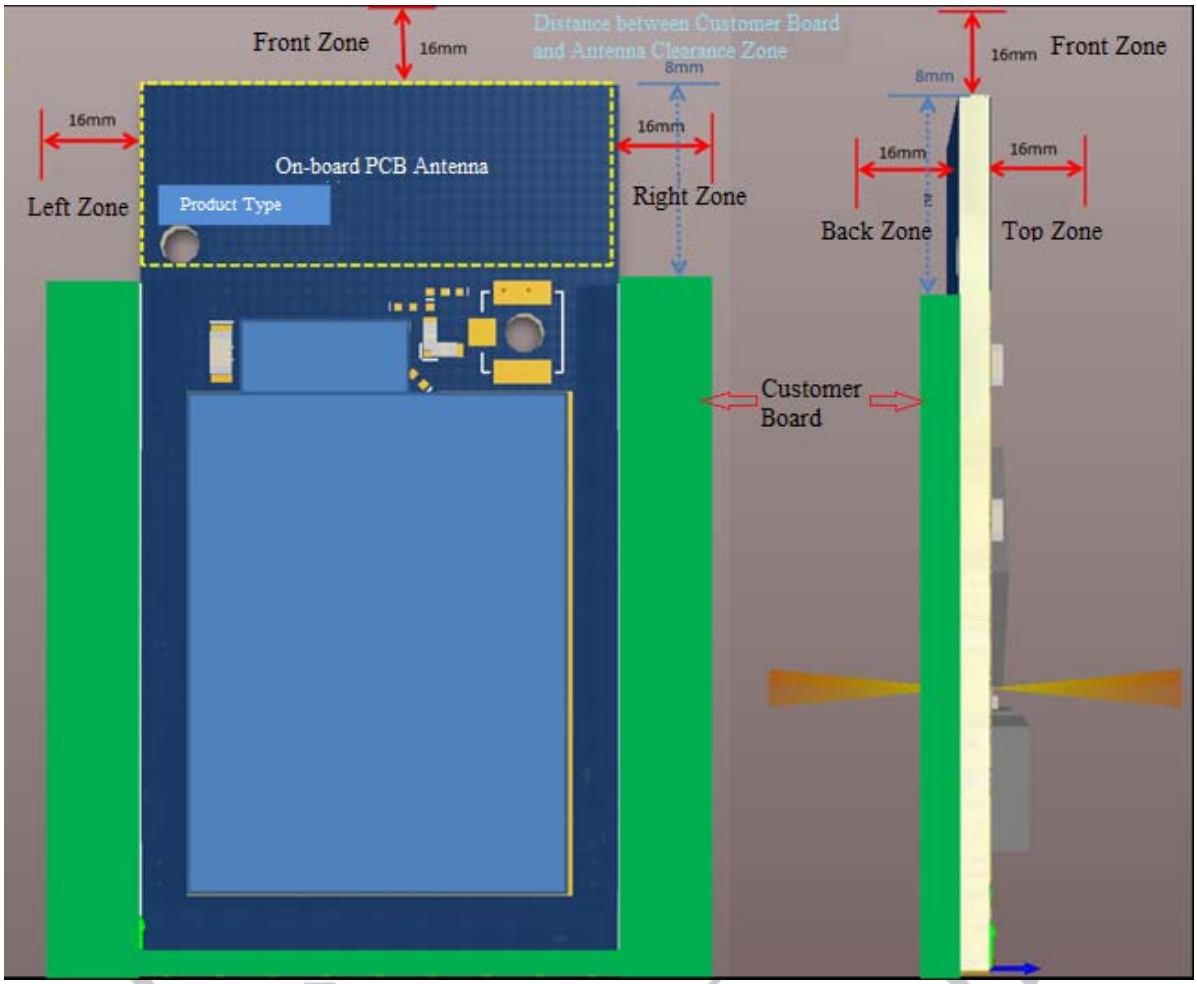

Figure5Minimum Clearance Zone of PCB Antenna (Unit: mm）

禁止复制

4.3 External Antenna Connector

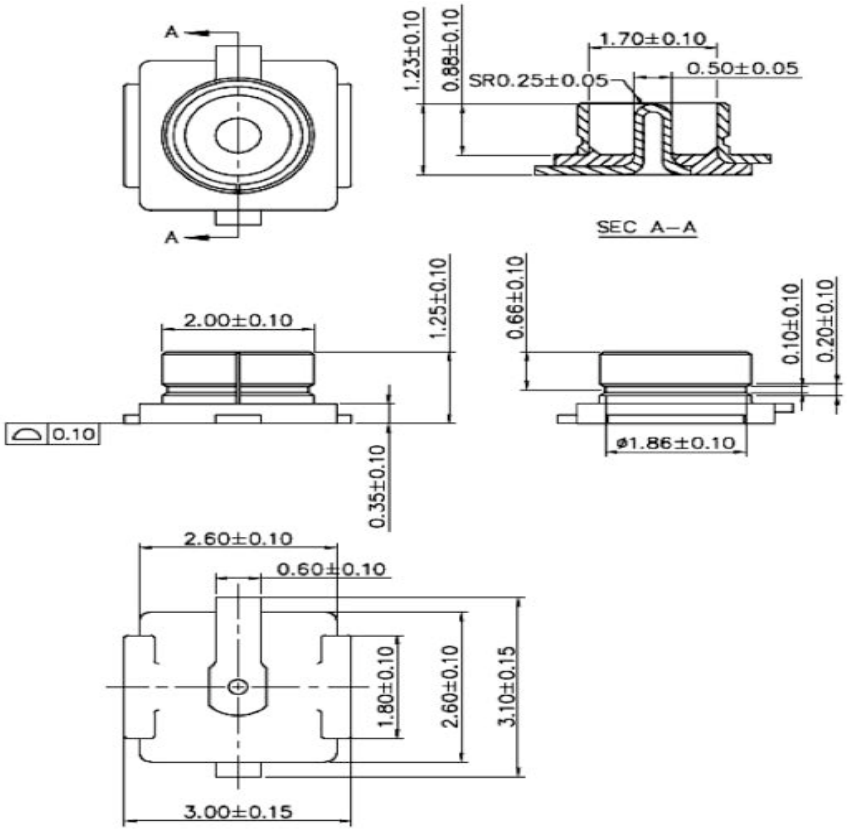

Figure6Size of External Antenna Connector

上海复旦 禁止复制

5. Assembly Information and Production Guidance

5.1 Assembly Size

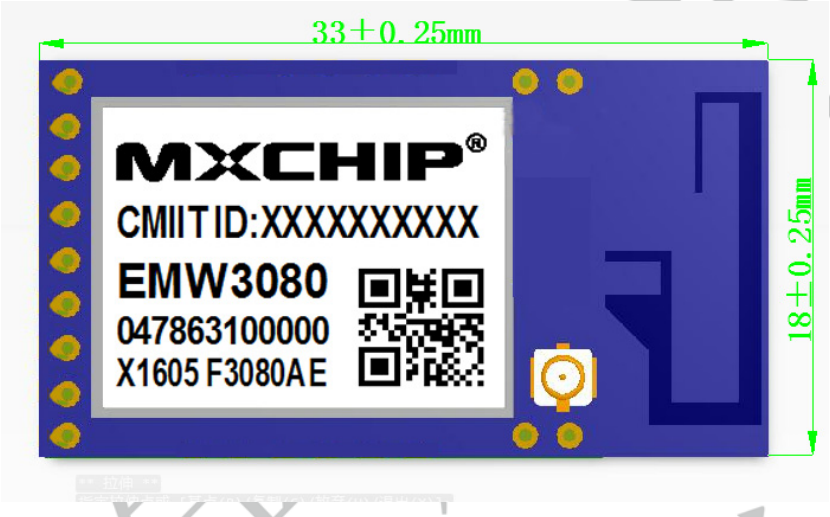

Top View

Left Side View

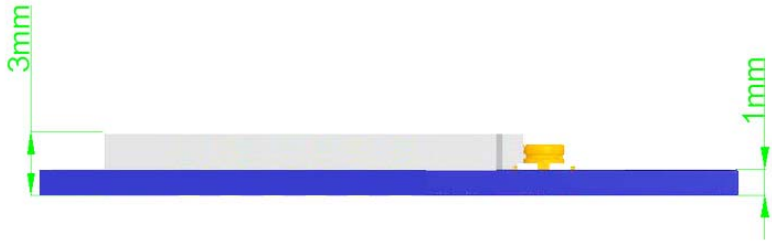

Side View

Figure7EMW3080Side View (Unit: mm)

5.2 Production Guidance（Important）

- The stamp hole package module produced by Mxchip must completely being patched by SMT machine in 24 hours after open firmware package. Otherwise the module should be re-package by vacuum pumping and drying before patch.
  - Devices for SMT patch:

    （1）Reflow soldering machine
    （2）AOI detector
    （3）Suction nozzle with 6-8mm caliber
  - Device for drying:

    （1）Cabinet type oven
    （2）Anti-static and high thermotolerant tray
    （3）Anti-static and high thermotolerant gloves
- Conditions of product storage (Storage environment is shown in figure 8):
  - Moisture bag must be stored in temperature below 30 and humidity less than 85%RH.
  - Dry packaging products, the guarantee period should be from 6 months date of packing seal.
  - Humidity indicator card is in the hermetic package.

Figure8Humidity Card

- Humidity indicator card and drying situation:
  - 2 hours drying for module if the color ring at 30%, 40%, 50% in humidity indicator card is blue after unpacking;
  - 4 hours drying for module if the color ring at 30% in humidity indicator card is pink after unpacking;
  - 6 hours drying for module if the color ring at 30%, 40% in humidity indicator card is pink after unpacking;
  - 12 hours drying for module if the color ring at 30%, 40%, 50% in humidity indicator card is pink

after unpacking.

- Drying parameters:
  - Drying temperature: 125℃±5℃;
  - Alarm temperature:130℃;
  - SMT patch when the device cool down below 36℃ in natural condition;
  - Dry times: 1;
  - Please dry again if the module is unsoldering in 12 hours after last drying.
- SMT is unsuitable if the module packed over 3 months. There would be serious oxidation of the pad because of immersion gold and cause false welding and lack of weld. Mxchip does not assume the corresponding responsibility;
- ESD protection is required before SMT;
- SMT patch should on the basis of reflow profile diagram, maximum temperature 245℃, reflow profile diagram is shown in figure 10;
- In order to guarantee the reflow soldering qualification rate, vision and AOI detection should be done in 10% products for the first patch to make sure the rationality of temperature control, device adsorption mode and position. Detect 5 to 10 sample every hour in the following batch production.

5.3 Considerations

- Operator should wear anti-static gloves during producing;
- No more than drying time;
- Any explosive, flammable and corrosivematerial is not allowed to add in drying;
- Module should be put into oven with high thermotolerant tray. Ventilation should exist between each module and no direct contact with oven;
- Make sure oven is closed when drying to prevent temperature leaking;
- Reduce opening time or keep closing the door of the oven during drying;
- Use anti-static glove to take out module when its temperature below 36℃by natural cool down after drying;
- Make sure no water and dirt in the bottom of the module;
- Temperature and humidity control is level 3 for initial modules. Storage and drying conditions are based on IPC/JEDEC J-STD-020.

上海庆科 禁止复制

5.4 Storage Condition

CAUTION

This bag contains MOISTURE-SENSITIVE DEVICES

LEVEL 3

If Blank, see adjacent bar code label

1. Calculated shelf life in sealed bag: 12 months at < 40°C and < 90% relative humidity (RH)
2. Peak package body temperature: 260 °C
   If Blank, see adjacent bar code label
3. After bag is opened, devices that will be subjected to reflow solder or other high temperature process must
   a) Mounted within: 168 hrs. of factory conditions
   If Blank, see adjacent bar code label
   ≤ 30°C/60%RH, OR
   b) Stored at <10% RH
4. Devices require bake, before mounting, if:
   a) Humidity Indicator Card is > 10% when read at 23 ± 5°C
   b) 3a or 3b not met.
5. If baking is required, devices may be baked for 48 hrs. at 125 ± 5°C

   Note: If device containers cannot be subjected to high temperature or shorter bake times are desired, reference IPC/JEDEC J-STD-033 for bake procedure

Bag Seal Date: _____
If Blank, see adjacent bar code label

Note: Level and body temperature defined by IPC/JEDEC J-STD-020

Figure9Storage Condition

上海庆科 禁止复制

5.5 Temperature Curve of Secondary Reflow

Suggested solder paste type: SAC305, unleaded, solder paste thickness from 0.12 to 0.15, less than 2 times reflow.

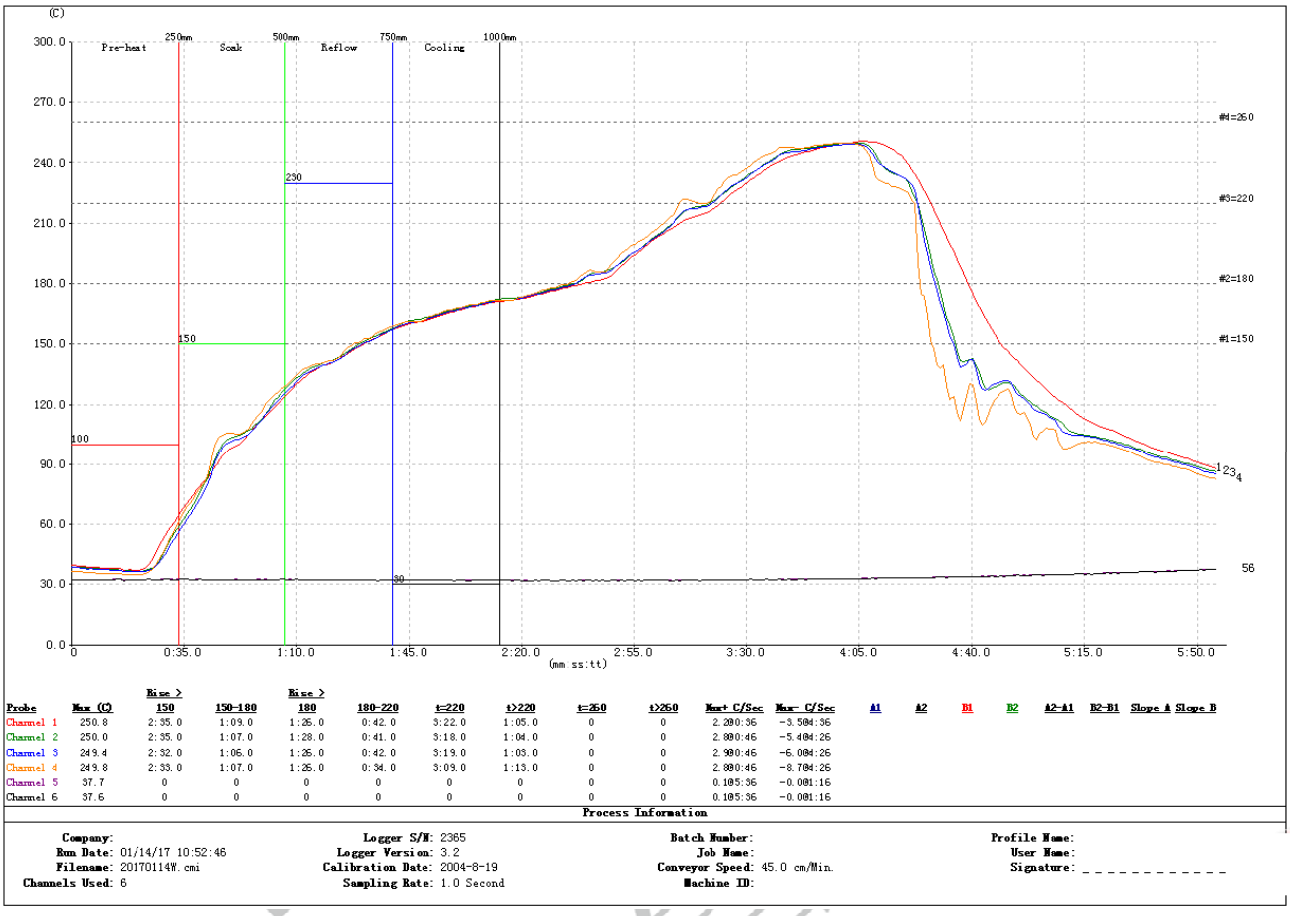

Probe	Max (C)	Rise > 150	150-180	Rise > 180	180-220	t>220	t>220	t>250	t>260	Max+ C/Sec	Max- C/Sec	A1	A2	B1	B2	A2-A1	B2-B1	Slope A	Slope B
Channel 1	250.8	2:35.0	1:09.0	1:25.0	0:42.0	3:22.0	1:05.0	0	0	2.200:36	-3.504:36								
Channel 2	250.0	2:35.0	1:07.0	1:28.0	0:41.0	3:18.0	1:04.0	0	0	2.880:46	-5.404:26								
Channel 3	249.4	2:32.0	1:06.0	1:25.0	0:42.0	3:19.0	1:03.0	0	0	2.980:46	-6.004:26								
Channel 4	249.8	2:33.0	1:07.0	1:25.0	0:34.0	3:09.0	1:13.0	0	0	2.880:46	-8.704:26								
Channel 5	37.7	0	0	0	0	0	0	0	0	0.105:36	-0.001:16								
Channel 6	37.6	0	0	0	0	0	0	0	0	0.105:36	-0.001:16								

Figure10Temperature Curve of Secondary Reflow

6. Reference Circuit

Power source circuit is shown in figure 11, USB to UART is shown in figure 12, external interface circuit is shown in figure 13.

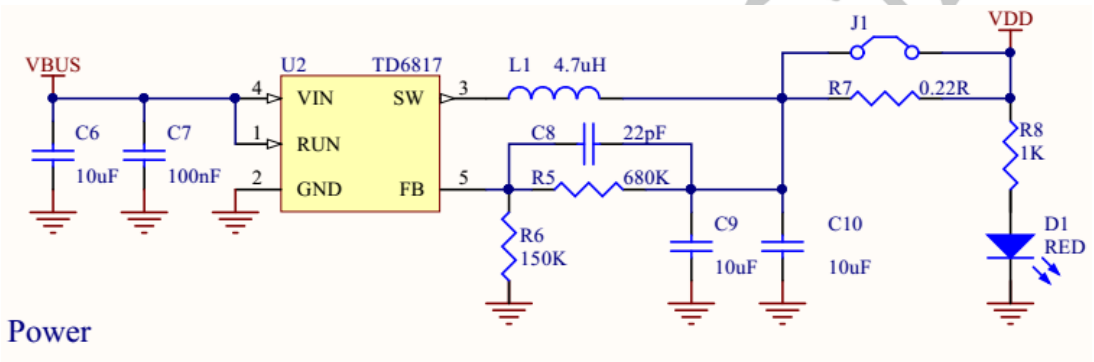

Figure11Power Source Circuit

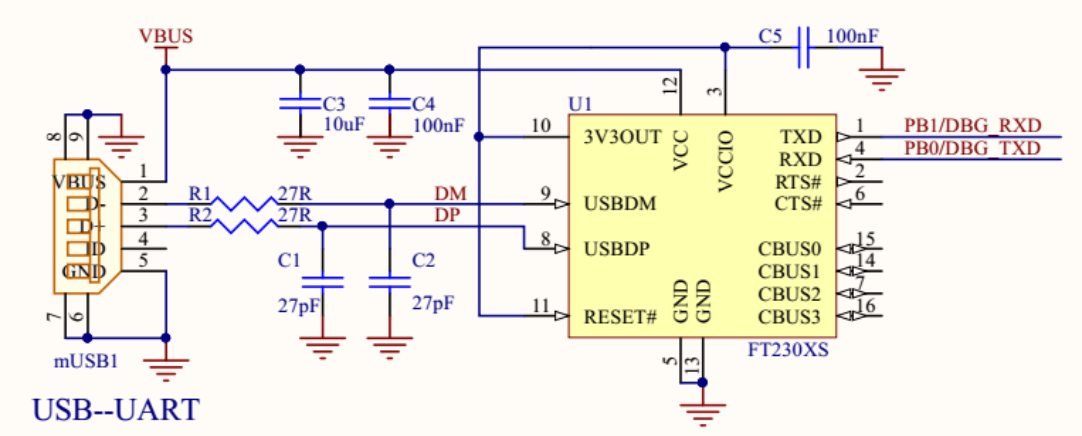

Figure12USB to UART

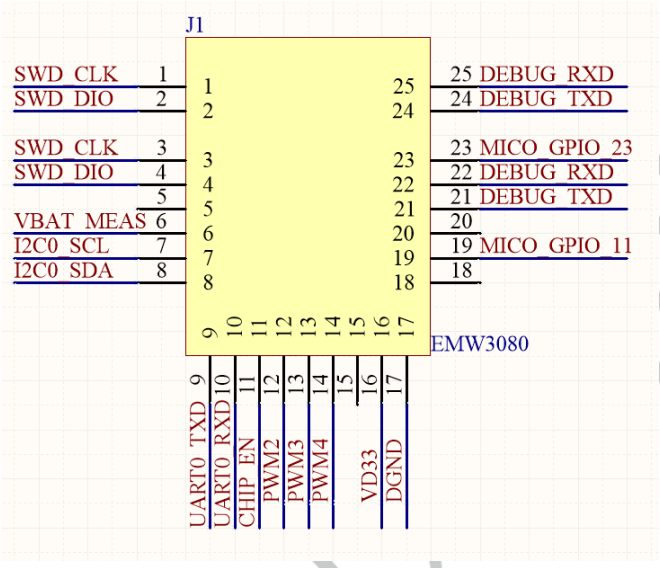

Figure13External Interface Circuit of EMW3080

Voltage of EMW3239 UART is 3.3V. 5V UART should convert to 3.3V UART for the users that have 5V chips. Convert circuit is shown in figure 14.

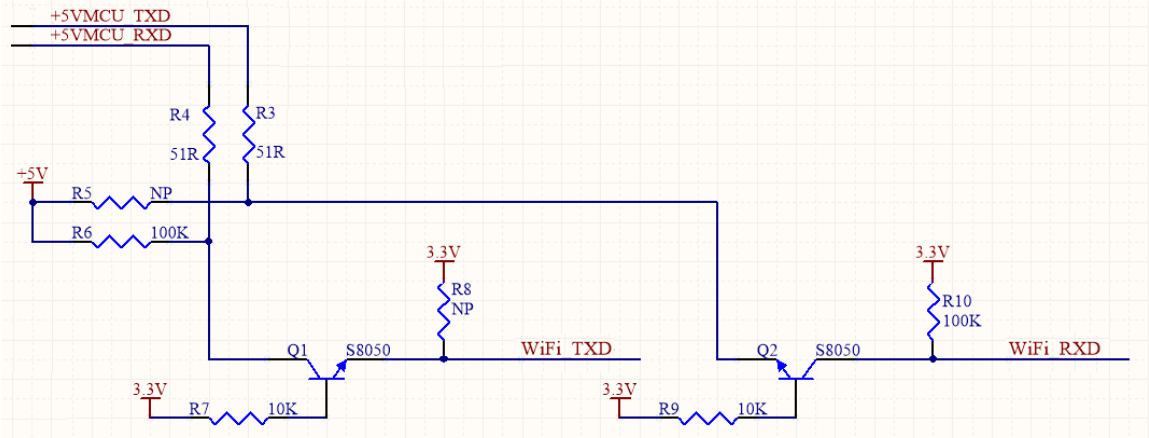

Figure143.3V UART- 5V UARTConvert Circuit

7. ModuleMOQ and Package Information

Table 16 ModuleMOQ and Package Information

Type	MOQ(pcs)	Shipping packing method（Tray/Tape）	Module storage quantity for each tray (pcs)	Tray number for each box	Module quantity for each box (pcs)
EMW3080(AP) EMW3080(AE) EMW3080(BP) EMW3080(BE)	1050（2 boxes）	Tray	35	15+1	525

上海庆科 禁止复制

8. FCC Caution

§ 15.19 Labeling requirements.

This device complies with part 15 of the FCC Rules. Operation is subject to the following two conditions: (1) This device may not cause harmful interference, and (2) this device must accept any interference received, including interference that may cause undesired operation.

§ 15.21 Information to user.

Any Changes or modifications not expressly approved by the party responsible for compliance could void the user's authority to operate the equipment.

§ 15.105 Information to the user.

Note: This equipment has been tested and found to comply with the limits for a Class B digital device, pursuant to part 15 of the FCC Rules. These limits are designed to provide reasonable protection against harmful interference in a residential installation. This equipment generates uses and can radiate radio frequency energy and, if not installed and used in accordance with the instructions, may cause harmful interference to radio communications. However, there is no guarantee that interference will not occur in a particular installation. If this equipment does cause harmful interference to radio or television reception, which can be determined by turning the equipment off and on, the user is encouraged to try to correct the interference by one or more of the following measures:

-Reorient or relocate the receiving antenna.

-Increase the separation between the equipment and receiver.

-Connect the equipment into an outlet on a circuit different from that to which the receiver is connected.

-Consult the dealer or an experienced radio/TV technician for help.

This equipment complies with FCC radiation exposure limits set forth for an uncontrolled environment. This equipment should be installed and operated withminimum distance 20cm between the radiator & your body.

This module is intended for OEM integrator. The OEM integrator is still responsible for the FCC compliance requirement of the end product which integrates this module.

The final end product must be labeled in a visible area with the following

" Contains TX FCC ID: P53-EMW3080".

上海庆科 禁止复制

9. CE Caution

Complies with the essential protection requirements of Directives on Radio Equipment Directive 2014/53/EU.

This declaration applies to all specimens manufactured identical to the samples submitted for testing/evaluation.

The assessments were based on the following regulations and standards:

Requirement	Standard	Report No.	Assessment Body
Health and safety	EN 60950-1:2006+A11:2009+A1:2010+A12:2011+A2:2013 EN 62311:2008;	SET2017-04238 SET2017-04738	Telefication B.V
EMC	Draft EN 301 489-1 V2.2.0 Draft EN 301 489-17 V3.2.0	SET2017-03082	Telefication B.V
Radio Spectrum	EN 300 328 V2.1.1	SET2017-03256	Telefication B.V

This declaration is the responsibility of the manufacturer:

上海庆科 禁止复制

10. Sales Information and Technical Support

Company: Shanghai MXCHIP Information Technology Co., Ltd

For consultation or purchase the product, please contact Mxchip during working hours:

From Monday to Friday, morning 9:00~12:00, afternoon 13:00~18:00

Telephone: +86-21-52655026

Contact address: 9thFloor, No.5, Lane2145 JinshaJiang Road Putuo District, ShangHai.

Postcode：200333

Email: sales@mxchip.com

上海庆科 禁止复制