MXCHIP®

Datasheet

EMW3090 Wi-Fi Module

Built-in ARM Cortex-M4F Wi-Fi MCU
2.4G Hz IEEE 802.11 b/g/n, ultra-high integration, rich peripherals

Version：2.7 Date: 2023-3-29 NO: DS0125EN

Abstract

- **Input Voltage：3.0V~3.6V**
- **Operating Temperature：** -20℃ to +85℃
- **Processor：ARM Cortex-M4 Processor Core MX1290**
  - MX1290，up to 125MHz
  - MX1290V2，up to 62.5MHz
  - 40MHz clock input
  - SWD/JTAG simulation debugger interface
- **Memory**
  - 256K bytes SRAM
  - 512K bytes ROM
  - 512 bytes OTP memory area
  - 2M bytes XIP flash
- **Wi-Fi**
  - IEEE 802.11 b/g/n 1T1R 2.4GHz Single Frequency
  - Built-in power amplifier (PA) with self-calibration
  - Support 802.11e QoS enhancement (WMM)
  - Support WPA/WPA2 PSK，Open/WEP/ TKIP/CCMP
  - Support WPA/WPA2 Enterprise
  - Support WPS，Wi-Fi Direct
  - Support IEEE Power Save mode
  - MX1290: support HT20/HT40, 150Mbps max.
  - MX1290v2: support HT20, 72Mbps max.
- **Rich Peripherals**
  - 11 x GPIO
  - 1 x SPI
  - 2 x I2C，support 400K high speed mode
  - 5 x PWM，up to 2MHz frequency
  - 2 x UART，support hardware flow control
  - 1 ADC channel
  - Low-energy RTC

- **Interface and Dimension**
  - Maintain pin compatibility with similar package modules
  - RF Interface: PCB antenna, or IPEX connector antenna
  - 18mm x 20mm, stamp hole or pin
- **Application Functions**
  - Support AliOS and MXOS operating system
  - Provide major cloud platforms access SDK
  - Mass production firmware for typical applications
- **Typical applications:**
  - smart home appliances
  - smart electric equipment
  - Industrial automation

- **Ordering Code**

Ordering Code	Notes
EMW3090-P	PCB antenna，MX1290 processor
EMW3090-E	IPEX antenna， MX1290 processor
EMW3090V2-P	PCB antenna，MX1290V2 processor
EMW3090V2-E	IPEX antenna， MX1290V2 processor
EMW3090V2-P-TR	PCB antenna，MX1290V2 processor, Tape and Reel

Copyright of Shanghai MXCHIP Information Technology Co., Ltd.

Order Code

Example **EMW 3 09 0 V2 -P -xxx**

Product Series

EMW=IoT Wi-Fi Module

Product Type

3=Welding type wireless module

Typical target applications and features

09=IOT Application 9 Series

Dimensions, enhancements

0=18mm x 20mm，2 x 9 pins 1.5 space, stamp hole

Processor version

[omit]= MX1290

V2= MX1290V2

RF Interface

P=2.4GHz On-Board PCB Antenna

E=2.4GHz External Antenna IPEX Connector

Option

TR = tape and reel（default package is tray

For a list of all relevant features (such as packaging, minimum order quantity, etc.) and other information, please contact the nearest MXCHIP sales point and agent.

Accessories

Order Code	Description
MXKIT-Base	Development board for all EMW3090 modules
MXKIT-Core-3090	The development board core board for the EMW3090, used with MXKIT-Base
FX-3090	EMW3090 production fixture with accompanying test board：MXKIT-Base, MXKIT-Core-3090

Copyright of Shanghai MXCHIP Information Technology Co., Ltd.

Version Update Instructions

Date	Version	Update Contents
2018-06-10	1.0	Release
2018-08-23	1.1	Add description of IO port level status at module startup
2018-12-26	1.2	Fixed SRRC ID
2019-01-17	1.3	Add module reference design circuit, add antenna parameters
2019-05-09	1.4	Change the antenna test parameters and clear zone schematic after MP
2019-05-13	1.5	Add OTA test data, modify sensitivity max.
2020-03-06	2.0	Rewritten according to new MXCHIP standard
2020-03-10	2.1	Update general assembly dimension diagram and pin distribution diagram
2020-03-24	2.2	Modify the default function and operating mode selection of pins
2020-04-16	2.3	Modify package information
2020-09-03	2.4	Update label information
2020-09-09	2.5	Update of order code information
2020-10-19	2.6	Reference design circuit updated
2023-04-22	2.7	Add relevant content required by FCC

Copyright Notice

Without permission, it is prohibited to use or copy all or any part of this manual, especially for trademarks, model naming, part numbers and drawings.

Contents

1. Introduction 1
2. Pin Definition 3
2.1. Pin Arrangement 3
2.2. Pin Definition 3
3. Electrical Parameter 6
3.1. Absolute Maximum Parameters 6
3.2. Operating Voltage and Current 6
3.3. General I/O interface 7
3.4. Typical Application Power Consumption 7
3.5. Temperature 8
3.6. ESD 8
3.7. RF Parameter 9
4. Antenna Information 13
4.1. PCB antenna parameters and use 13
4.1.1. On-board PCB parameter 13
4.2. PCB Antenna Clearance 14
4.3. External antenna parameters and use 14
4.3.1. SRRC Important statements 16
5. Dimensions and Production Guidance 17
5.1. Assembly Dimension Diagram 17
5.2. Recommended Package Drawing 17
6. Reference Circuits 18
6.1. Power 18
6.2. Module basic circuit 18
6.3. UART 18
7. Production Guidelines 20
7.1. Precautions 21
7.2. Secondary reflow temperature curve 21
7.3. Storage Condition 22
8. Label Information 23
9. FCC Information 24
9.1. FCC Warning 24
9.2. Notice 24
10. Sales and Technical Support Information 25

Table Catalog

Table 1 MX1290 and MX1290V2 difference Table 2
Table 2 Pin Arrangement 3
Table 3 operation mode 4
Table 4 Absolute Maximum Parameter: Voltage 6
Table 5 Operating parameters: rated voltage and current 6
Table 6 Operation parameter: Typical RF power consumption 6
Table 7 DC current: digital I/O 7
Table 8 Typical application power consumption 8
Table 9 Temperature and humidity parameters 8
Table 10 Electrostatic discharge parameters 8
Table 11 RF Parameter 9
Table 12 RF Parameters in IEEE802.11b mode 9

Copyright of Shanghai MXCHIP Information Technology Co., Ltd.

Table 13 RF Parameters in IEEE802.11g mode 10
Table 14 RF Parameters in IEEE802.11n HT20 mode 11
Table 15 RF Parameters in IEEE802.11n HT40 mode 12
Table 16 On-board PCB parameter 13
Table 17 Typical furnace temperature settings 21

Figure Catalog

Figure 1 EMW3090 Hardware Block Diagram 1
Figure 2 Pin Arrangement 3
Figure 3 IO The power-on state interface 5
Figure 4 Antenna minimum clearance area (unit: mm) 14
Figure 5 Copper tube antenna size 15
Figure 6 Dimension drawing of external antenna connector 15
Figure 7 Assembly Dimension Diagram (unit: mm, tolerance: ±0.1, outside tolerance±0.2)) 17
Figure 8 Package size (unit: mm) 17
Figure 9 Power reference circuit 18
Figure 10 module basic circuit connection 18
Figure 11 USB to serial port reference circuit 19
Figure 12 UART 3.3V/5V conversion circuit 19
Figure 13 Humidity Card 20
Figure 14 Typical secondary reflux temperature profile 22
Figure 15 Storage Conditions Diagram 22
Figure 16 Label diagram 23

Copyright of Shanghai MXCHIP Information Technology Co., Ltd.

1. Introduction

The EMW308x/EMW309x series modules are mainly used for IoT data communication. Data collection and control are realized through a rich peripheral interface, and data can be transmitted to the Internet of Things cloud service platform through a Wi-Fi network connection to realize the Internet of Everything. This series of modules is used in a wide range of IoT applications through a variety of different form factors, interface types, antenna interfaces and temperature range.

The module includes a super-integrated Wi-Fi microcontroller MX1290 that integrates a Cortex-M4F core up to 125MHz, 256K bytes of SRAM, 2M bytes of Flash memory, and IEEE 802.11 b/g/ n Standard 2.4 GHz RF. Streamlined peripheral circuitry makes the overall module size and interface design more flexible and easier to control costs. The high-performance processing core and security module greatly improve the speed of networking interaction and reduce the overall power consumption while ensuring data security.

Shanghai MXCHIP provides MXOS and AliOS software platforms to support the development of EMW3090 series modules, providing an efficient development environment, access protocol stacks for various IoT cloud services, rich sample programs and various typical applications.

The following figure shows the hardware block diagram of the EMW3090 module, which mainly includes:

- Wi-Fi processor MX1290/MX1290V2
- Equipped with 2M bytes of SPI interface Flash memory
- On-board or external antenna
- Power and communication interface

Figure 1 EMW3090 Hardware Block Diagram

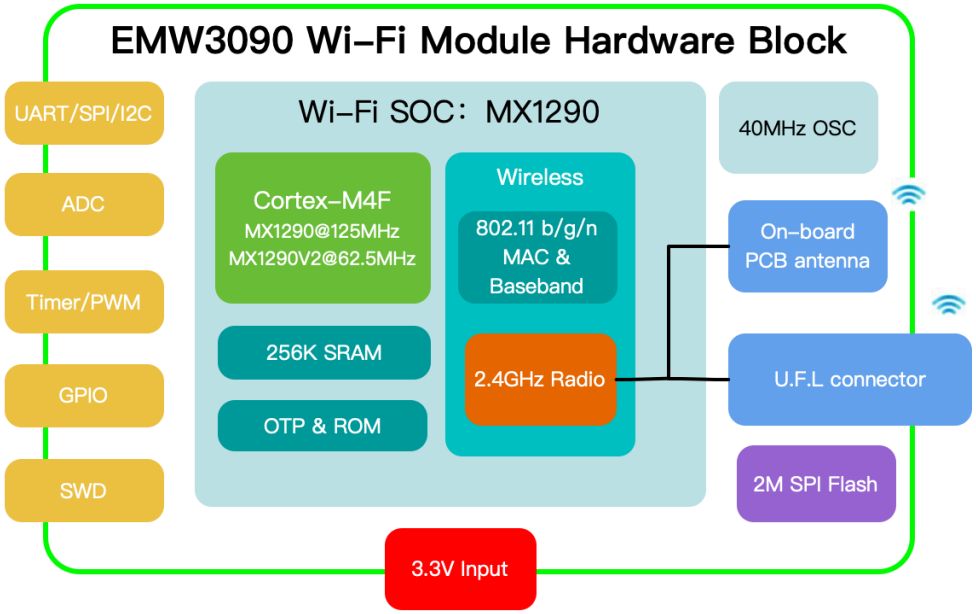

MX1290 Wi-Fi microcontrollers are provided in two versions, MX1290 and MX1290V2. In MX1290V2, in order to provide a more cost-effective choice for this series of modules, the software restricts hardware

Copyright of Shanghai MXCHIP Information Technology Co., Ltd.

functions and cannot be lifted through software upgrades. The main differences are as follows:

Table 1 MX1290 and MX1290V2 difference Table

Model	Main Frequency	Wi-Fi	Security
MX1290	125MHz	Support HT20 and HT40，transmitting rate up to 150Mbps	Support Flash encryption，Trust Zone Lite
MX1290V2	62.5MHz	Support HT20，transmitting rate up to 72.2Mbps	-

Copyright of Shanghai MXCHIP Information Technology Co., Ltd.

2. Pin Definition

2.1. Pin Arrangement

Figure 2 Pin Arrangement

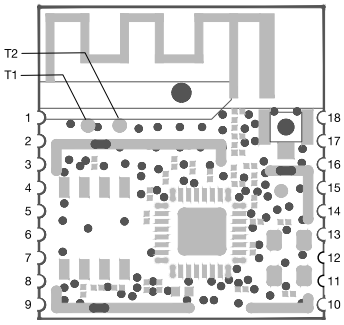

2.2. Pin Definition

Table 2 Pin Arrangement

Pin Number	Name	Main Function (After Reset)	PWM	UART	I2C	SPI	Others
1	VDD						
2	CHIP_EN(3) (5)						
3	PA_0	PA_0	PWM_2				
4	PA_12	PA_12	PWM_3				
5	PA_19	PA_19	TIM5_TRIG	UART0_CTS	I2C0_SDA	SPI1_CS	ADC1
6	PA_22	PA_22	PWM_5	UART0_RTS	I2C0_SCL	SPI1_MISO	WAKEUP_2
7	PA_30(1) (2) (5)	UART2_Log_TX	PWM_3	UART2_Log_TX	I2C0_SDA		PA_30
8	PA_29(2) (5)	UART2_Log_RX	PWM_4	UART2_Log_RX	I2C0_SCL		PA_29
9	VSS						
10	PA_5	PA_5	PWM_4				WAKEUP_1
11	PA_18	PA_18	TIM4_TRIG	UART0_RX	I2C1_SCL	SPI1_CLK	WAKEUP_0
12	PA_23	PA_23	PWM_0	UART0_TX	I2C1_SDA	SPI1_MOSI	WAKEUP_3
13	VSS						
14	PA_8(1)	PA_8					
15	NC						
16	NC						
17	PA_11(1)	PA_11					
18	VSS						
T1	PA_15	SWDIO	PWM_1				
T2	PA_14	SWCLK	PWM_0				

Notes:

1. Module working mode selection signal. During the startup phase, the module detects the

Copyright of Shanghai MXCHIP Information Technology Co., Ltd.

level of these pins and enters a specific working state. The correspondence between level and working mode is shown in Table 3:

Table 3 operation mode

Operation mode	**PA_30 (UART2_Log_TX) Default: 1**	**PA_11 (BOOT) Default: 1**	**PA_8 (EASYLINK) Default: 1**
ISP Program Mode	0	not detect	not detect
Bootloader	1	0	1
ATE	1	0	0
Normal	1	1 (Default)	not detect

(1). During the startup phase, if the processor hardware detects that the PA_30 level is low, it enters the ISP programming mode. In ISP programming mode, you can program the flash of the module through UART2 (PA_29, PA_30). In normal use, the level of the PA_30 pin must be high or floating at the time of power-up, please pay special attention when designing the circuit.

(2). After the startup is completed, when the processor runs the firmware provided by MXCHIP, the firmware detects the status of PA_11 and PA_8 to enter the corresponding working mode.

2. The UART2_Log serial port is used for the input / output of debugging information. Do not use it during design, and provide it in a convenient way to facilitate software development.

3. The CHIP_EN pin is an enable reset pin, which is active low and can be left floating if not used. Or pull up 3.3V.

4. Please keep unused pins floating. It should be noted that the IO port is in a floating state at startup. If you need to configure the state of the pin through software, you need to wait until the code in the bootloader starts to execute. The time from when the module is powered on to when the code in the bootloader is executed will be affected by the flash startup time. Therefore, if you need IO to be in a certain level state at startup, you need to use a 100k resistor on the pin to pull up and down. Figure 3 shows the level change of the IO port whose software is configured as a low level after being pulled up by an external 100K resistor in the floating state. It can be seen that the time from powering on the module to the IO port software controllable time is 69.4ms,

Copyright of Shanghai MXCHIP Information Technology Co., Ltd.

during which the time for IO to be pulled to high level is about 20ms.

Figure 3 IO The power-on state interface

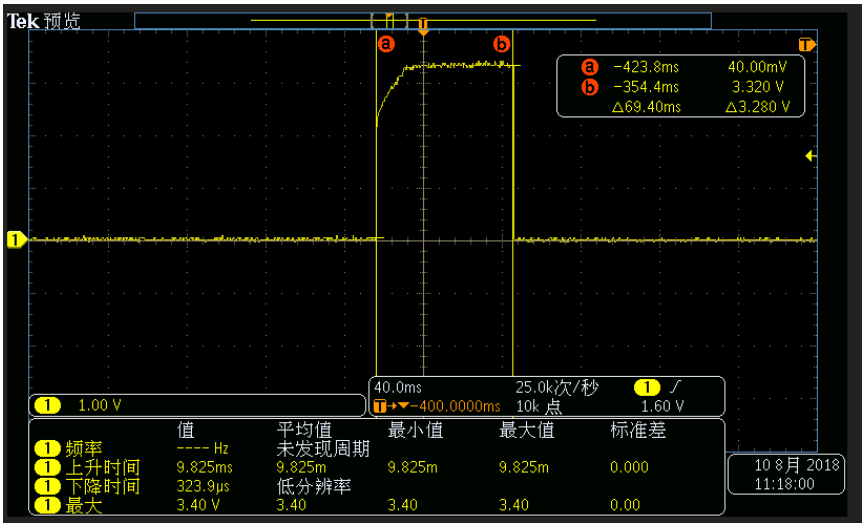

5. The module has 100K hardware pull-up resistors in PA_30 (UART2_Log_TX) and PA_29 (UART2_Log_RX). The PA_0 pin has a 100K hardware pull-down resistor, and CHIP_EN has an internal 100K pull-up resistor and 0.01μF capacitance to ground.

Copyright of Shanghai MXCHIP Information Technology Co., Ltd.

3. Electrical Parameter

3.1. Absolute Maximum Parameters

Operation of the module outside of its absolute maximum ratings may result in permanent damage. At the same time, long-term exposure to the maximum rated conditions will affect the reliability of the module.

Table 4 Absolute Maximum Parameter: Voltage

Symbol	Ratings	Min	Max	Unit
V_{DD}–V_{SS}	Voltage	–0.3	3.6	V
V_{IN}	Input voltage on any other pin	V_{SS}–0.3	V_{DD}+0.3	V

3.2. Operating Voltage and Current

Table 5 Operating parameters: rated voltage and current

Symbol	Note	Specification			
		Min.	Typical	Max.	Unit
V_{DD}	Voltage	3.0	3.3	3.6	V
V_{DD_IO}	Digital IO Supply Voltage	1.62	1.8 ~ 3.3	3.6	V
I_{VDD}	3.3V Rating Current (with 450 mA internal regulator and integrated CMOS PA)			450	mA
I_{DD_IO}	IO Rating Current (including V_{DD_IO})			50	mA
I_{VDD}	Deep Sleep Mode		7	7	uA
I_{VDD}	Deep Standby Mode		70	70	uA
I_{VDD}	Sleep Power Gate		120	120	uA
I_{VDD}	Sleep Clock Gate		350	350	uA

Table 6 Operation parameter: Typical RF power consumption

Symbol	Note		Specification			
	CPU	Wi-Fi	Min.	Typical	Max.	Unit
I_{VDD}	Deep Sleep Mode	Wi-Fi OFF		7	10	uA
I_{VDD}	Deep Standby Mode Pull up Flash CS pin	Wi-Fi OFF			150	uA
I_{VDD}	Sleep	Wi-Fi OFF		500	600	uA
I_{VDD}	Active	Wi-Fi OFF	14	14	26	mA
I_{VDD}	Sleep	Wi-Fi Associate, DTIM = 1		2.78		mA
I_{VDD}	Sleep	Wi-Fi Associate, DTIM = 3		1.49		mA
I_{VDD}	Active	Wi-Fi Associate, DTIM = 1		47		mA
I_{VDD}	Active	Wi-Fi Associate, DTIM = 3		46		mA
I_{VDD}	Sleep	Wi-Fi RX		90		mA
I_{VDD}	Active	Wi-Fi RX		120		mA
I_{VDD}	Active	TX@MCS7/HT40，13dBm		220		mA
I_{VDD}	Active	TX@MCS7/HT40，16.5dBm		230		mA

Copyright of Shanghai MXCHIP Information Technology Co., Ltd.

Symbol	Note		Specification			
	CPU	Wi-Fi	Min.	Typical	Max.	Unit
I_{VDD}	Active	TX@MCS7/HT20，13dBm		244		mA
I_{VDD}	Active	TX@MCS7/HT20，16.5dBm		257		mA
I_{VDD}	Active	TX@OFDM54M, 15dBm		255		mA
I_{VDD}	Active	TX@OFDM54M, 17.5dBm		267		mA
I_{VDD}	Active	TX@CCK11M, 17dBm		287		mA
I_{VDD}	Active	TX@CCK11M, 18dBm		295		mA
I_{VDD}	Active	RX@Idle, HT40		120		mA
I_{VDD}	Active	RX@MCS7, HT40 (Pin= -60dBm)		130		mA
I_{VDD}	Active	RX@MCS7, HT20 (Pin= -60dBm)		127		mA
I_{VDD}	Active	RX@OFDM54M (Pin= -60dBm)		127		mA
I_{VDD}	Active	RX@CCK11M (Pin= -60dBm)		115		mA
I_{VDD}	Active	RF Standby		84		mA
I_{VDD}	Active	RF disable		62		mA

(1). The above parameters are measured in the laboratory wireless shielding environment. Refer to Table 8 for actual application power consumption.

(2). In Deep Standby Mode, the CS signal of Flash should be pulled high, otherwise the MX1290 will generate leakage current on the Flash interface.

(3). Flash power consumption is not included in the data in Table 6. When reading code or reading and writing data from the Flash, the power consumption of the Flash is not higher than 20mA, and the power consumption of the Flash in standby mode (CS signal pulled high) is not higher than 50μA.

3.3. General I/O interface

Table 7 DC current: digital I/O

Symbol	Note	Conditions	Specification			
			Min.	Typical	Max.	Unit
V_{IH}	Input-High Voltage	LVTTL	2.0	-	-	V
V_{IL}	Input-Low Voltage	LVTTL	-	-	0.8	V
V_{OH}	Output-High Voltage	LVTTL	2.4	-	-	V
V_{OL}	Output-Low Voltage	LVTTL	-	-	0.4	V
I_{T+}	Schmitt-trigger High Level		1.78	1.87	1.97	V
I_{T-}	Schmitt-trigger Low Level		1.36	1.45	1.56	V
I_{IL}	Input-Leakage Current	V_{IN}=3.3V or 0	-10	±1	10	μA

3.4. Typical Application Power Consumption

The module current test environment is based on VDD=3.3V. Test under common office application environment (values measured under different test environments will be different).

Copyright of Shanghai MXCHIP Information Technology Co., Ltd.

Table 8 Typical application power consumption

Mode	EMW3090		EMW3090V2		Unit	Note
	Average	Max.	Average	Max.		
Wi-Fi off	28.3	28.3	21	21	mA	CPU idle
Wi-Fi off	3.5	3.5	3.5	3.5	mA	CPU idle, turn on low power consumption
Wi-Fi off	24.6	24.7	19	20	mA	CPU running at full load
Wi-Fi initial	114.	121	110	126	mA	Power on state, turn off low power consumption
Keep Wi-Fi connected	114	147	109	124	mA	Turn off Wi-Fi and MCU low power consumption
Keep Wi-Fi connected	14	290	9.06	282	mA	Turn on Wi-Fi and MCU low power consumption
SoftAP mode	118	306	116	306	mA	SoftAP networking status
Monitor mode	114	122	114	126	mA	Distribution process, in RX state
Deepsleep mode	10	12	10	12	μA	MCU / RAM / peripheral / RTC is off, can be woken up by wake-up pin or internal Timer
Iperf performance mode	160	336	115	345	mA	Turn off Wi-Fi and MCU low power consumption
Iperf performance mode	164	332	115	353	mA	Turn on Wi-Fi and MCU low power consumption

3.5. Temperature

Table 9 Temperature and humidity parameters

Symbol	Ratings	Max	Unit
T_{STG}	Storage temperature	–55 to +125	℃
T_{work}	Ambient Operating Temperature	-20 to +85	℃
T_{Jun}	Junction Temperature	0 to +125	℃

3.6. ESD

Table 10 Electrostatic discharge parameters

Symbol	Name	Name	Level	Max.	Unit
V_{ESD}(HBM)	Electrostatic discharge voltage (Human body model)	TA= +25 °C comply with JESD22-A114	2	2000	V
V_{ESD}(CDM)	Electrostatic discharge voltage (Discharge equipment model)	TA = +25 °C comply with JESD22-C101	II	500	

Copyright of Shanghai MXCHIP Information Technology Co., Ltd.

3.7. RF Parameter

Table 11 RF Parameter

Item	Specification
Operating Frequency	2.412~2.462GHz
Channel BW	20MHz，40MHz(MX1290 only)
Antenna Interface	1T1R, Single stream
Wi-Fi Standard	IEEE 802.11b/g/n
Modulation Type	11b: DBPSK, DQPSK, CCK for DSSS 11g: BPSK, QPSK, 16QAM, 64QAM for OFDM 11n: MCS0~7, OFDM
Data Rates	802.11b: 1, 2, 5.5 and 11Mbps 802.11g: 6, 9, 12, 18, 24, 36, 48 and 54 Mbps 802.11n: MCS0~7, up to 72.2Mbps 802.11n: MCS0~7, up to 150Mbps (MX1290 only)
Antenna type	One U.F.L connector for external antenna PCB printed ANT (Reserve)

Note: The typical values of the following Tx test data are recorded under normal temperature environment and Tx lasts about 20s.

IEEE 802.11b mode

Table 12 RF Parameters in IEEE802.11b mode

Item	Description			
Mode	IEEE802.11b			
Channel	CH1 to CH11			
Data rate	1, 2, 5.5, 11Mbps			
TX Characteristics	**Min.**	**Typical**	**Max.**	**Unit**
Transmitter Output Power				
11b Target Power@1Mbps	15	16.5	18	dBm
11b Target Power@11Mbps	15.0	16.5	18.0	dBm
Spectrum Mask				
fc +/-11MHz to +/-22MHz	-	-	-30	dBr
fc > +/-22MHz	-	-	-50	dBr
Frequency Error	-15	-1	+15	ppm
Constellation Error (peak EVM)				
1~11Mbps	-	-15.5	35% (or -11dB)	
RX Characteristics	**Min.**	**Typical**	**Max.**	**Unit**
Minimum Input Level Sensitivity				
1Mbps (FER≦8%)	-	-98	-97	dBm
11Mbps (FER≦8%)	-	-90	-90	dBm

Copyright of Shanghai MXCHIP Information Technology Co., Ltd.

The 11b power is the power obtained from the factory mode test (through the wall mode), the actual user application and certification test will be 2dB lower than the factory mode, i.e. the actual maximum power of the 11b is capped at 16dBm. ensure that the PSD test item of the certification test can be passed.

IEEE802.11g mode

Table 13 RF Parameters in IEEE802.11g mode

Item	Description			
Mode	IEEE802.11g			
Channel	CH1 to CH11			
Data rate	6, 9, 12, 18, 24, 36, 48, 54Mbps			
TX Characteristics	**Min.**	**Typical**	**Max.**	**Unit**
Transmitter Output Power				
11g Target Power@6Mbps	14	15.5	17	dBm
11g Target Power@54Mbps	13	14.5	16	dBm
Spectrum Mask				
fc +/- 11MHz	-	-	-20	dBr
fc +/- 20MHz	-	-	-28	dBr
fc > +/-30MHz	-	-	-40	dBr
Frequency Error	-15	-1	+15	ppm
Constellation Error (peak EVM)				
6Mbps	-	-30	-5	dBm
54Mbps	-	-31	-25	dBm
RX Characteristics	**Min.**	**Typical**	**Max.**	**Unit**
Minimum Input Level Sensitivity				
6Mbps (FER≦10%)	-	-92.5	-92.5	dBm
54Mbps (FER≦10%)	-	-76	-75.5	dBm

Copyright of Shanghai MXCHIP Information Technology Co., Ltd.

IEEE802.11n HT20 mode

Table 14 RF Parameters in IEEE802.11n HT20 mode

Item	Description			
Mode	IEEE802.11n HT20			
Channel	CH1 to CH11			
Data rate	MCS0/1/2/3/4/5/6/7			
TX Characteristics	**Min.**	**Typical**	**Max.**	**Unit**
Transmitter Output Power				
11n Target Power@MCS0	13.5	15	16.5	dBm
11n Target Power@MCS7	12	13.5	15.0	dBm
Spectrum Mask				
fc +/- 11MHz	-	-	-20	dBr
fc +/- 20MHz	-	-	-28	dBr
fc > +/-30MHz	-	-	-45	dBr
Frequency Error	-15	-1	+15	ppm
Constellation Error (peak EVM)				
MCS0	-	-30	-5	dBm
MCS7	-	-32	-27	dBm
RX Characteristics	**Min.**	**Typical**	**Max.**	**Unit**
Minimum Input Level Sensitivity				
MCS0 (FER≦10%)	-	-92.5	-92.5	dBm
MCS7 (FER≦10%)	-	-73	-73	dBm

Copyright of Shanghai MXCHIP Information Technology Co., Ltd.

IEEE802.11n HT40 mode (MX1290V2 not support)

Table 15 RF Parameters in IEEE802.11n HT40 mode

Item	Description			
Mode	IEEE802.11n HT40			
Channel	CH3 to CH9			
Data rate	MCS0/1/2/3/4/5/6/7			
TX Characteristics	**Min.**	**Typical**	**Max.**	**Unit**
Transmitter Output Power				
11n Target Power@MCS0	13.5	15	16.5	dBm
11n Target Power@MCS7	12	13.5	15.0	dBm
Spectrum Mask				
fc +/- 11MHz	-	-	-20	dBr
fc +/- 20MHz	-	-	-28	dBr
fc > +/-30MHz	-	-	-45	dBr
Frequency Error	-15	-1	+15	ppm
Constellation Error (peak EVM)				
MCS0	-	-30	-5	dBm
MCS7	-	-32	-28	dBm
RX Characteristics	**Min.**	**Typical**	**Max.**	**Unit**
Minimum Input Level Sensitivity				
MCS0 (FER≦10%)	-	-92.5	-92.5	dBm
MCS7 (FER≦10%)	-	-73	-73	dBm

Copyright of Shanghai MXCHIP Information Technology Co., Ltd.

4. Antenna Information

EMW3090 has two specifications: PCB antenna and external antenna, please refer to the order code for order. IPX antenna connectors are not soldered on the modules using PCB antennas. By connecting an external antenna through an IPX connector, you can get better RF performance.

4.1. PCB antenna parameters and use

4.1.1. On-board PCB parameter

Table 16 On-board PCB parameter

Item	Min.	Typical	Max.	Unit
Frequency	2400		2500	MHz
Impedance		50		Ω
VSWR			2	
Gain	≤2dBi			
Efficiency	>60% or >-2.22dB			

Note: The above conditions are obtained with the module soldered to the motherboard and under anechoic chamber test conditions.

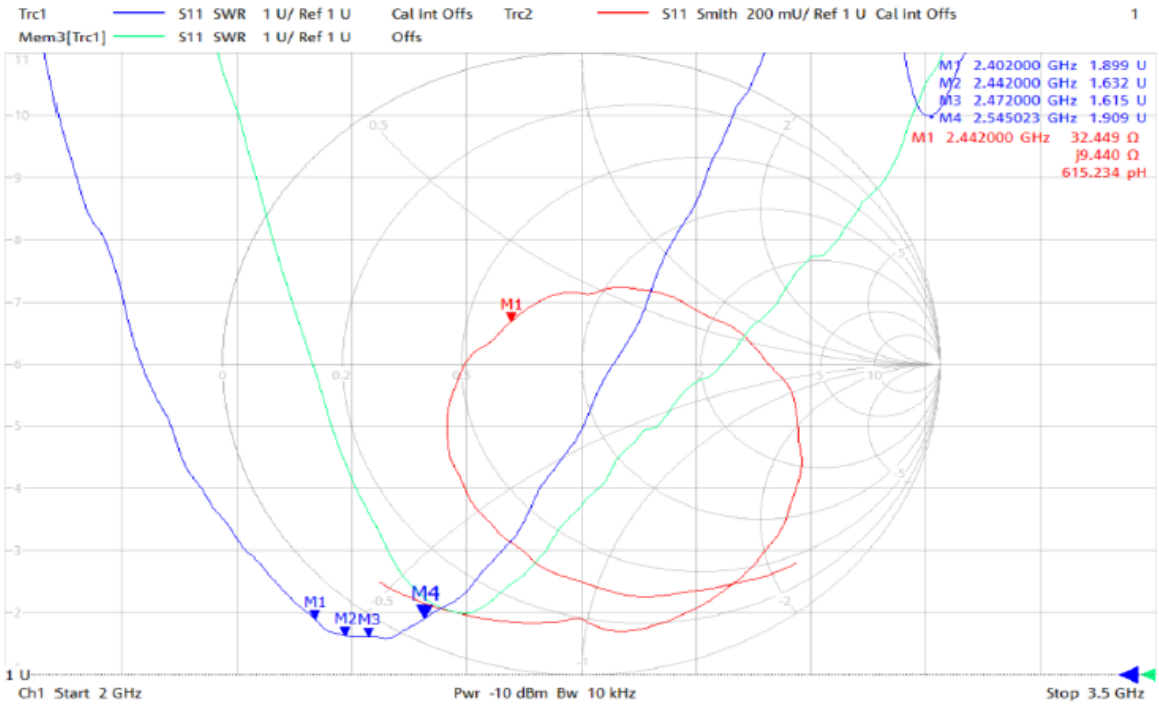

Copyright of Shanghai MXCHIP Information Technology Co., Ltd.

Passive Test For WIFI								
Freq (MHz)	Effi (%)	Effi (dB)	Gain (dBi)	Gain (dBd)	Max (dB)	Min (dB)	Attenut Hor	Attenut Ver
2400	63.0	-2.0	1.2	-1.0	1.2	-12.2	53.3	52.6
2410	62.7	-2.0	1.0	-1.1	1.0	-11.9	53.3	52.6
2420	62.2	-2.1	0.9	-1.2	0.9	-11.7	53.5	52.6
2430	63.0	-2.0	0.9	-1.3	0.9	-11.3	53.3	52.7
2440	62.1	-2.1	0.7	-1.5	0.7	-10.9	53.4	52.8
2450	63.7	-2.0	0.6	-1.5	0.6	-10.9	53.5	53.0
2460	62.5	-2.0	0.6	-1.5	0.6	-11.2	53.5	52.9
2470	63.8	-2.0	0.8	-1.4	0.8	-11.0	53.5	52.9
2480	64.6	-1.9	0.9	-1.3	0.9	-10.9	53.5	52.8
2490	63.1	-2.0	0.8	-1.3	0.8	-10.8	53.5	52.9
2500	61.7	-2.1	0.8	-1.4	0.8	-10.9	53.5	52.9

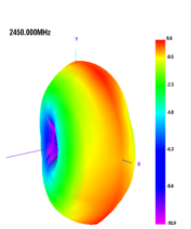

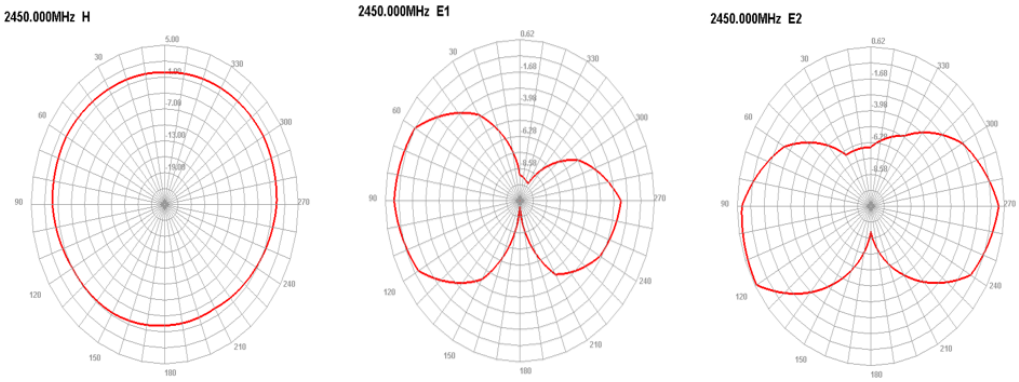

Note: The above antenna test data is based on the module soldered to the test board with good clearance area in anechoic chamber conditions, the measured data is for reference only. In actual use, the antenna is affected by the whole structure and enclosure, the data will be deviated.

4.2. PCB Antenna Clearance

When using PCB antenna in Wi-Fi module, it is necessary to ensure that PCB and other metal devices are at least 16 mm away from the motherboard. The shaded areas in the figure below need to be far away from metal devices, sensors, interference sources and other materials that may cause signal interference.

Figure 4 Antenna minimum clearance area (unit: mm)

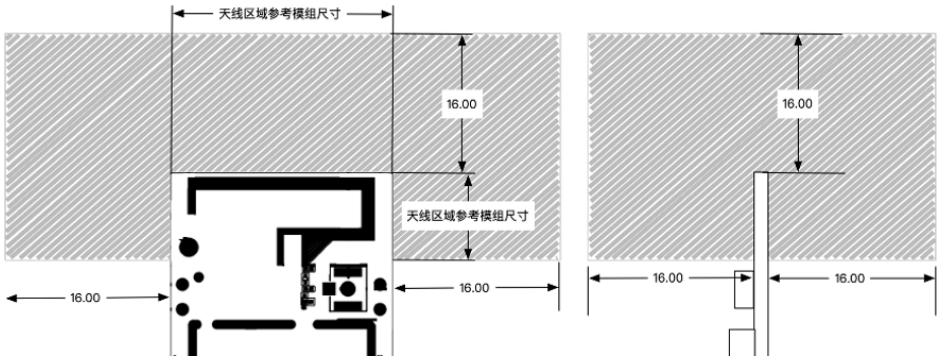

4.3. External antenna parameters and use

Users can choose different 2.4G antennas with different external dimensions and gains not greater than 2dBi according to the application environment.

When using an external antenna, it should be noted that the module must be powered on after the

Copyright of Shanghai MXCHIP Information Technology Co., Ltd.

antenna is connected, because the module will perform IQ calibration after power on, and send a single carrier through the PA to pass the RX loop detection signal. If the load is not loaded (the antenna is not connected), it will cause calibration errors, which will make the PA output power abnormal, and a large standing wave will be formed at the PA output, which may damage the internal devices.

The following is a copper tube antenna with an IPEX connector commonly used by MXCHIP:

Figure 5 Copper tube antenna size

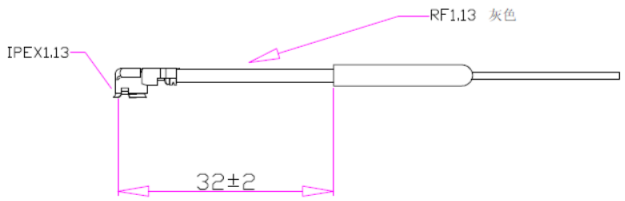

- Frequency range: 2400-2500 MHz
- Input impedance: 50 OHM
- VSWR: < 2.0
- Gain：2.0DBI
- Polarization: vertical
- Directivity: Omnidirectional
- Copper tube: 4.4 * 23mm
- Wire: 1.13 gray wire L-82mm

External antenna IPEX seat size:

Figure 6 Dimension drawing of external antenna connector

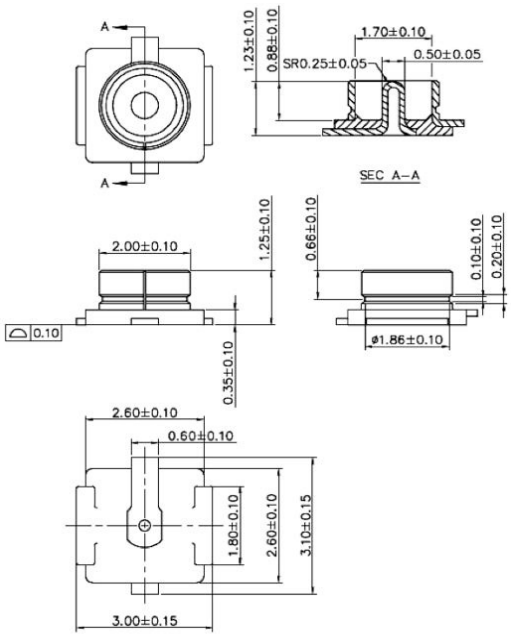

4.3.1. SRRC Important statements

The SRRC type approval number obtained for module models using an external antenna base has the (M) suffix and any module with the (M) suffix is specifically declared as follows.

Type approval of a module does not imply that the end equipment in which the module is embedded or in which it is used complies with the relevant radio regulations or standards, and the end equipment manufacturer is responsible for the conformity of the technical characteristics of the product with the radio regulations or standards.

Copyright of Shanghai MXCHIP Information Technology Co., Ltd.

5. Dimensions and Production Guidance

5.1. Assembly Dimension Diagram

Figure 7 Assembly Dimension Diagram (unit: mm, tolerance: ±0.1, outside tolerance±0.2))

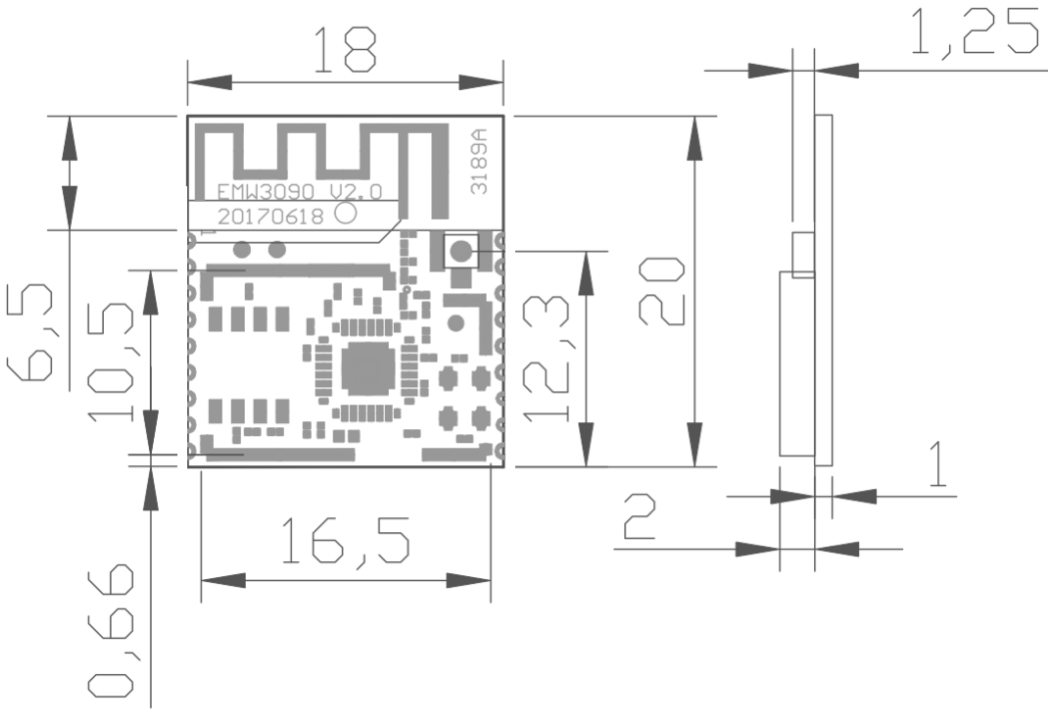

5.2. Recommended Package Drawing

Figure 8 Package size (unit: mm)

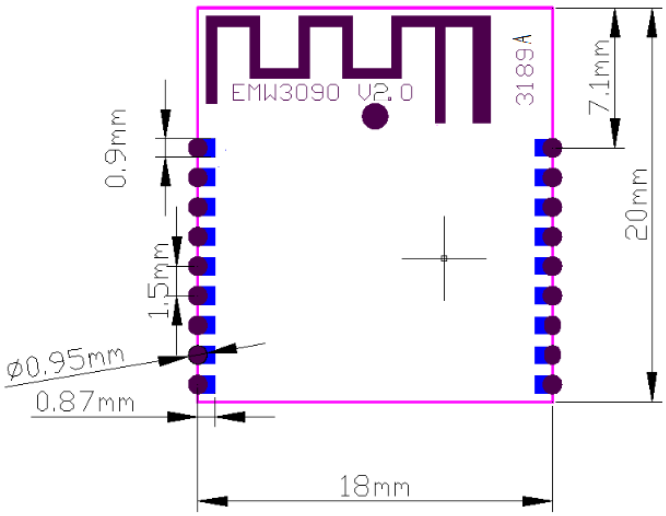

Copyright of Shanghai MXCHIP Information Technology Co., Ltd.

6. Reference Circuits

6.1. Power

The module uses 3.3V DC single voltage power supply. The following is an example of power supply after conversion with 5V power supply of USB interface.

Figure 9 Power reference circuit

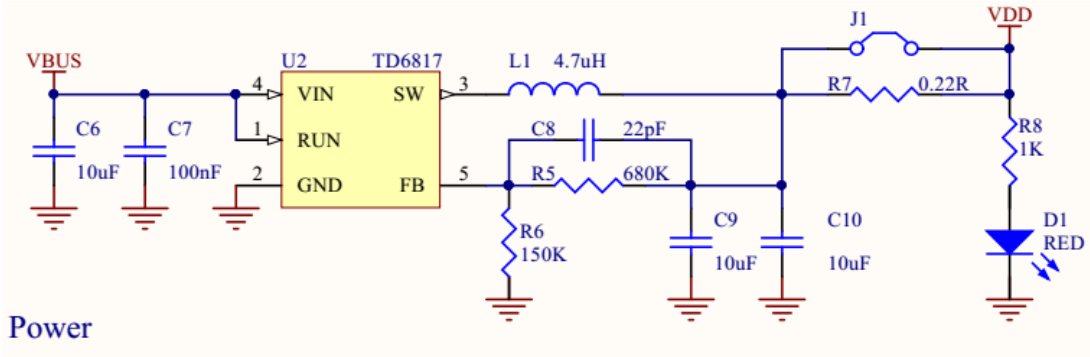

6.2. Module basic circuit

Figure 10 module basic circuit connection

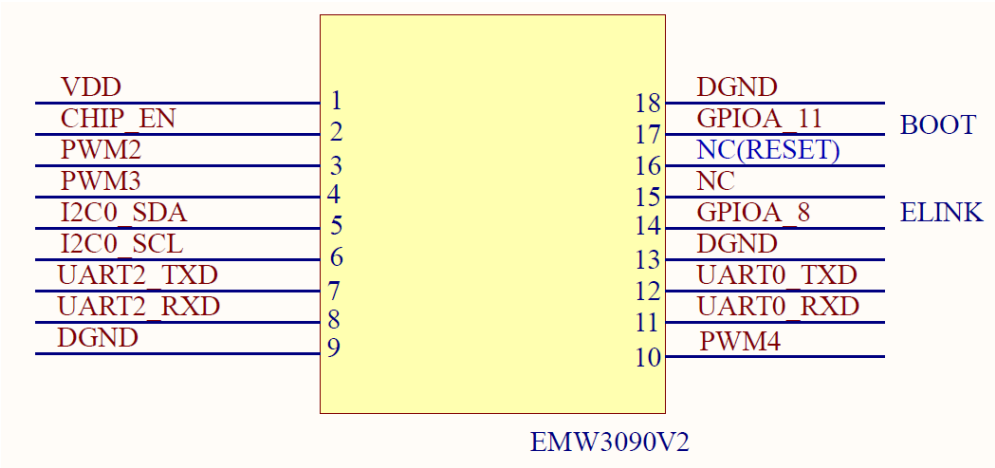

Note: The module has 100K hardware pull-up resistors in PA_30 (UART2_Log_TX) and PA_29 (UART2_Log_RX). The PA_0 pin has a 100K hardware pull-down resistor. CHIP_EN has an internal 100K pull-up resistor and 0.01μF capacitance to ground. Please pay special attention to the design schematic and PCB and allocate the pull-up and pull-down according to the internal hardware.

6.3. UART

During the debugging process, the UART signal is usually converted to USB and then connected to the PC.

Copyright of Shanghai MXCHIP Information Technology Co., Ltd.

The conversion reference circuit is shown in Figure 11:

Figure 11 USB to serial port reference circuit

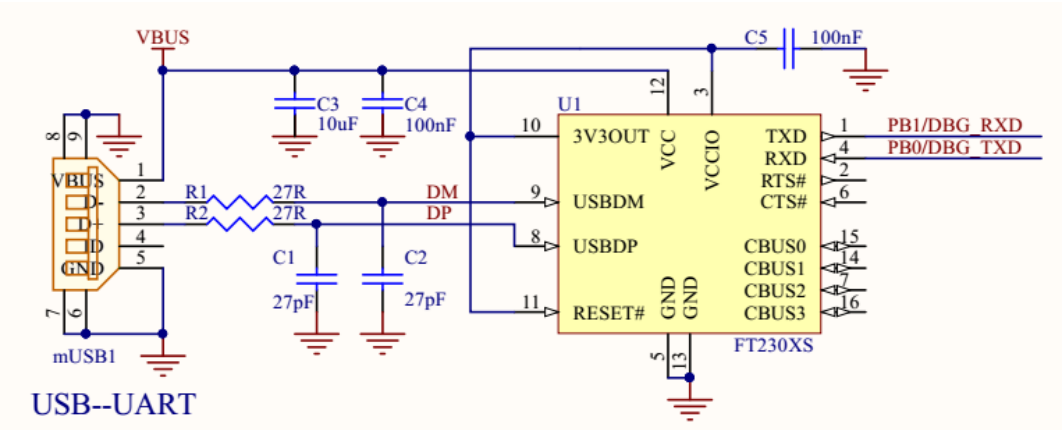

If the UART of the chip used by the user is 5V, you need to convert the 5V UART to 3.3V to communicate with the module. For the 5V-3.3V UART conversion circuit, please refer to the circuit shown in Figure 12.

Figure 12 UART 3.3V/5V conversion circuit

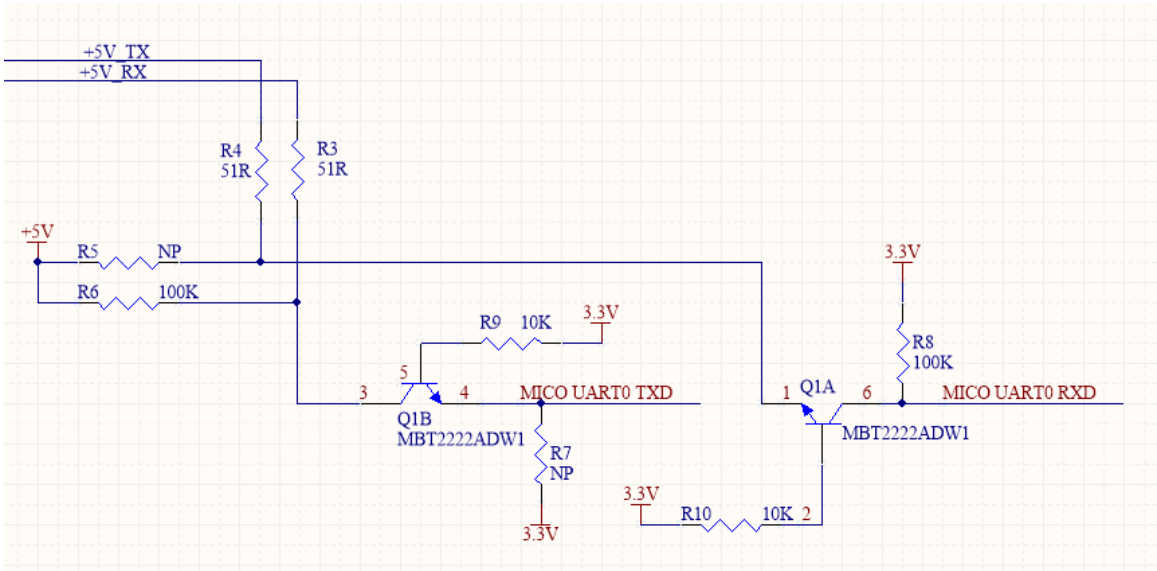

7. Production Guidelines

MXCHIP stamp port packaging module must be SMT machine patches, module humidity sensitivity grade MSL3, after unpacking more than a fixed time patches to bake module.

- SMT patches require instruments
  - Reflow bonding machine
  - AOI detector
  - 6-8mm suction nozzle
- Baking requires equipment:
  - Cabinet oven
  - Anti-static, high temperature tray
  - Antistatic and heat resistant gloves

The storage conditions of MXCHIP module are as follows:

- Moisture-proof bags must be stored in an environment with temperature < 30 degree C and humidity < 85% RH.
- A humidity indicator card is installed in the sealed package.

Figure 13 Humidity Card

After the module is split, if the humidity card shows pink, it needs to be baked.

The baking parameters are as follows:

- The baking temperature is 120℃±5℃ and the baking time is 4 hours.
- The alarm temperature is set to 130℃.
- SMT patches can be made after cooling < 36℃ under natural conditions.
- Drying times: 1 time.
- If there is no welding after baking for more than 12 hours, please bake again.

If the disassembly time exceeds 3 months, SMT process is forbidden to weld this batch of modules,

Copyright of Shanghai MXCHIP Information Technology Co., Ltd.

because PCB gold deposition process, over 3 months, pad oxidation is serious, SMT patch is likely to lead to virtual welding, leak welding, resulting in various problems, our company does not assume the corresponding responsibility.

Before SMT patch, ESD (Electrostatic Discharge, Electrostatic Release) protection should be applied to the module.

SMT patches should be made according to the reflow curve. The peak temperature is 250 C.

In order to ensure the qualified rate of reflow soldering, 10% of the first patches should be taken for visual inspection and AOI testing to ensure the rationality of furnace temperature control, device adsorption mode and placement mode, and 5-10 patches per hour are recommended for visual inspection and AOI testing in subsequent batch production.

7.1. Precautions

- Operators of each station must wear static gloves during the entire production process.
- Do not exceed the baking time when baking.
- It is strictly forbidden to add explosive, flammable, or corrosive substances during baking.
- When baking, the module uses a high temperature tray to be placed in the oven to keep the air circulation between each module while avoiding direct contact between the module and the inner wall of the oven.
- When baking, please close the oven door to ensure that the oven is closed to prevent temperature leakage and affect the baking effect.
- Try not to open the door when the oven is running. If it must be opened, try to shorten the time for opening the door.
- After baking, the module should be naturally cooled to <36°C before wearing the static gloves to avoid burns.
- When operating, strictly guard against water or dirt on the bottom of the module.

The temperature and humidity control level of MXCHIP factory module is Level3, and the storage and baking conditions are based on IPC/JEDEC J-STD-020.

7.2. Secondary reflow temperature curve

Recommended solder paste type: SAC305, lead free. No more than 2 reflow cycles. Peak temperature not to exceed 245°C. The following is a typical furnace temperature profile setting.

Table 17 Typical furnace temperature settings

Furnace settings	Z1	Z2	Z3	Z4	Z5	Z6	Z7	Z8	Z9	Z10
Upper temperature zone setting	135	150	170	175	180	215	250	260	247	200

Copyright of Shanghai MXCHIP Information Technology Co., Ltd.

Lower temperature zone setting	135	150	170	175	180	215	250	260	247	200

Figure 14 Typical secondary reflux temperature profile

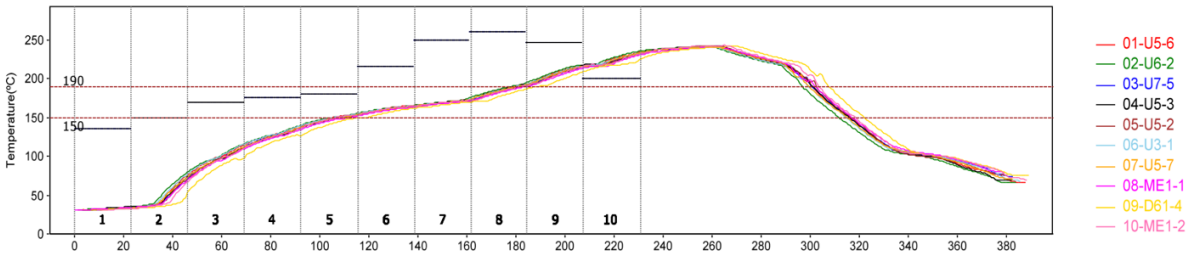

- 30℃～150℃ preheating temperature rise: 0-3℃/s, typical value: 1.2℃/s
- 150℃～190℃ immersion time: 60-100second, typical value：72second
- Peak temperature: 245°C, typical value: 242°C
- Time above 220°C: 50 sec. to 90 sec. Typical value: 70 sec
- 217℃cooling speed: -3～0℃/s, typical value：-2.0℃/s

7.3. Storage Condition

Figure 15 Storage Conditions Diagram

Copyright of Shanghai MXCHIP Information Technology Co., Ltd.

8. Label Information

Figure 16 Label diagram

1. MXCHIP: Company Logo.
2. EMW3090V2-P: Product Main Type.
3. CMIIT ID: 2019DP6819
4. FCC ID: P53-EMW3090V2
5. B0F8931000AB: MAC Address.
6. X1915: Product Auxiliary Model.
7. 0000.0000.A213: Firmware Version.

Note: Due to production batch and version and other reasons, the above label diagram is for reference only, please prevail in kind.

The OEM must comply with the FCC labeling requirements. If the module' s label is not visible when installed, then an additional permanent label must be applied on the outside of the finished product which states: "Contains transmitter module FCC ID: P53-EMW3090V2 "

Copyright of Shanghai MXCHIP Information Technology Co., Ltd.

9. FCC Information

This device complies with part 15 of the FCC Rules. Operation is subject to the following two conditions: (1) This device may not cause harmful interference, and (2) this device must accept any interference received, including interference that may cause undesired operation.

9.1. FCC Warning

Any Changes or modifications not expressly approved by the party responsible for compliance could void the user's authority to operate the equipment.

Note: This equipment has been tested and found to comply with the limits for a Class B digital device, pursuant to part 15 of the FCC Rules. These limits are designed to provide reasonable protection against harmful interference in a residential installation. This equipment generates uses and can radiate radio frequency energy and, if not installed and used in accordance with the instructions, may cause harmful interference to radio communications. However, there is no guarantee that interference will not occur in a particular installation. If this equipment does cause harmful interference to radio or television reception, which can be determined by turning the equipment off and on, the user is encouraged to try to correct the interference by one or more of the following measures:

-Reorient or relocate the receiving antenna.

-Increase the separation between the equipment and receiver.

-Connect the equipment into an outlet on a circuit different from that to which the receiver is connected.

-Consult the dealer or an experienced radio/TV technician for help.

This equipment complies with FCC radiation exposure limits set forth for an uncontrolled environment. This equipment should be installed and operated with minimum distance 20cm between the radiator & your body.

9.2. Notice

1. The module is limited to OEM installation ONLY.

2. The OEM integrators is responsible for ensuring that the end-user has no manual instructions to remove or install module.

3. That module is limited to installation in mobile or fixed applications, according to Part 2.1091(b).

4. That separate approval is required for all other operating configurations, including portable configurations with respect to Part 2.1093 and different antenna configurations.

Copyright of Shanghai MXCHIP Information Technology Co., Ltd.

10. Sales and Technical Support Information

If you need to consult or purchase this product, please call Shanghai MXCHIP Information Technology Co., Ltd. during office hours.

Office hours: Monday to Friday morning: 9:00-12:00, afternoon: 13:00-18:00

Contact Tel: +86-21-52655026

Address: 9th Floor, Lane 5, 2145 Jinshajiang Road, Putuo District, Shanghai

Zip code: 200333

Email: sales@mxchip.com

Copyright of Shanghai MXCHIP Information Technology Co., Ltd.