Application Note Guide for user design

Version：V1.0 **Date：2019-03-14** **Application Note**

Introduction

This note lists the matters need attention in each stage of designing and manufacturing while using MXCHIP module. In order to achieve rapid mass production, application designers need learn this note first. Consider and avoid all possible problems which may happen during designing, manufacturing, firmware programming and testing ahead of time.

Applicative module type:

- EMW30xxV2 series

To note stage:

- Hardware designing
- Firmware programming
- Firmware testing
- Production SMT
- OTA upgrading

Basic features of module:

- Globally unique MAC ID for each module
- Copper tube Antenna
- Support 802.11 b/g/n and WLAN
- Support WIFI Direct
- Support Easylink
- Working temperature: -20°C to +85°C

EMW3091top view：

EMW3091 model list

Module model	Antenna type	Description
EMW3091	Copper tube Antenna	Default

Hardware block：

EMW3091 Wi-Fi Module Hardware Block

SOC

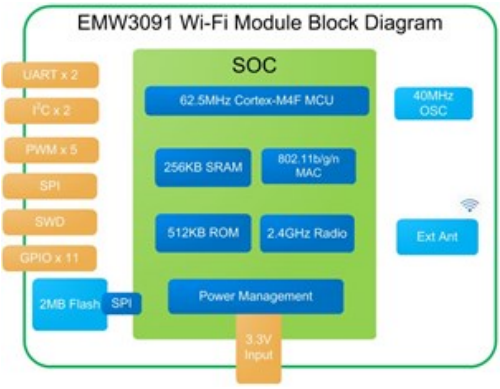

Catalogue

1. Hardware design considerations 1

1.1 Mechanical dimensions 1

1.2 Recommended package design 1

1.3 DC power design 3

1.4 Recommended circuit design 3

1.5 RF design 5

1.5.1 Antenna placement 5

1.5.2. T U.F.L RF Connector 7

1.6 ESD design 7

2. Firmware programming and warehouse entry inspection method 9

2.1 Receiving Inspection Device List 9

2.2 System Connection 10

2.4 Testing 12

2.5 Statements 14

3. SMT matters 15

3.1 Note for stencil aperture 15

3.2 Recommended reflow profile 15

MXCHIP reprint prohibited

4. Mass production testing and firmware upgrading.....17

4.1 Mass production test.....17

4.1.1 EMSP command way.....17

4.1.2 Limited development firmware.....17

4.1.3 Full development firmware.....17

4.2 Upgrading.....17

5. Firmware encrypt 18

6. Sales and technical support information 18

List of figures

Figure 1 Vertical view 1

Figure 2 side view 1

Figure 3 Recommended Package for DIP 2

Figure 4 Recommended Package for SMT 2

Figure 5 Power Conversion Design 3

Figure 6 USB to Serial Design 3

Figure 7 5V UART to 3.3V UART Conversion Design 4

Figure 8 WiFi module Recommended Design 4

Figure 9 PCB Recommended Design 5

Figure 10 Minimum Size of Keep-out Zone Around Antenna 6

Figure 11 Module Position Recommended on Mother Board 6

Figure 12 U.F.L Connector Size 7

Figure 13 Development Board Switch Settings 10

MXCHIP reprint prohibited

Figure 14 Power Led 10

Figure 15 COM Name in Device Manager 10

Figure 16 FWUpdate.exe 11
Figure 17 Place Module 11
Figure 18 Programming 12
Figure 19 Programming Over 12
Figure 20 Switch Setting 13
Figure 21 Testing Success 13
Figure 22 Log Saving 14
Figure 23 Recommended Stencil Aperture 15
Table 24 Warehouse Entry Inspection Equipment List 16

List of tables

Table 1 Warehouse Entry Inspection Equipment List 9

MXCHIP reprint prohibited

1. Hardware design considerations

1.1 Mechanical dimensions

EMW3091 mechanical dimension of vertical view:

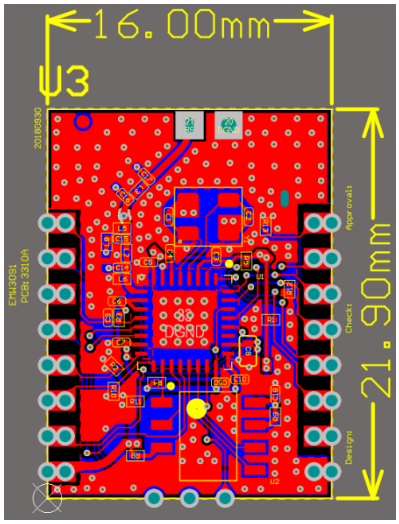

Figure 1 Vertical

view EMW3091 mechanical dimension of side view:

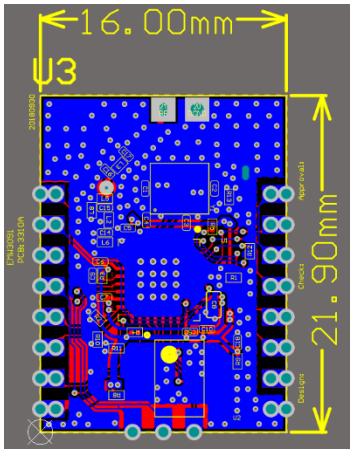

Figure 2 Bottom view

1.2 Recommended package design

The figure followed below is the recommended package design MXCHIP suggested while designing the baseplate.

EMW3091 applies two solutions for hand-soldering: DIP and half-hole footprint.

The solder window has the same size of the pad. The stencil aperture that suggested for SMT is 0.12mm-0.14mm. The solder paste recommended is SAC305 and lead free.

Figure 3 Recommended Package for DIP

MXCHIP reprint prohibited

Figure 4 Recommended Package for SMT

1.3 DC power design

Peak current of EMW3091 is about 320mA. The DC/DC power chip MXCHIP recommended should be whose maximum output current is over 600mA. DC/DC gets more superiority on power conversion than LDO.

When using DC/DC power chip, except for the requirements of output voltage (3.3V) and maximum current (600mA), application designer should pay more attention on the arrangement of wires. For instance, device should be compact enough, the ground of input and output should be well connected and the feedback signal should be far away from the inductance and the Schottky diode. Please refer to the datasheet of DC/DC power chip for more information

When using LDO power chip, application designer need notice on the maximum current (600mA) and heat dissipation**.**

1.4 Recommended circuit design

Recommended circuit design for EMW3091:

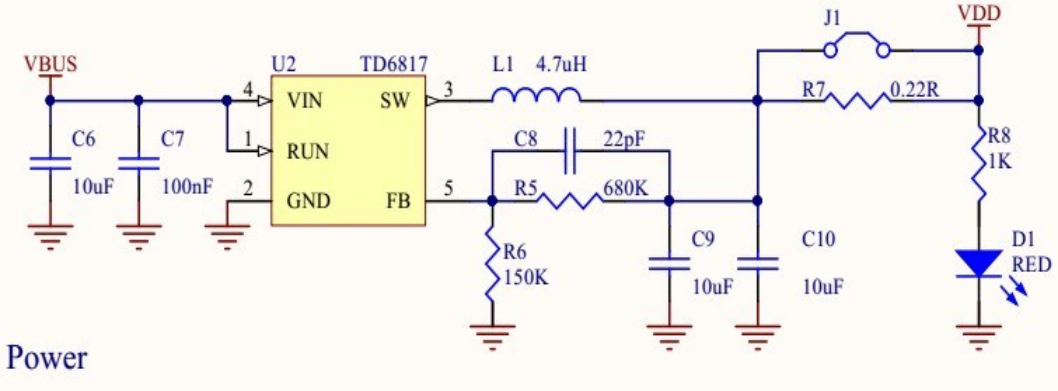

Figure 5 Power Conversion Design

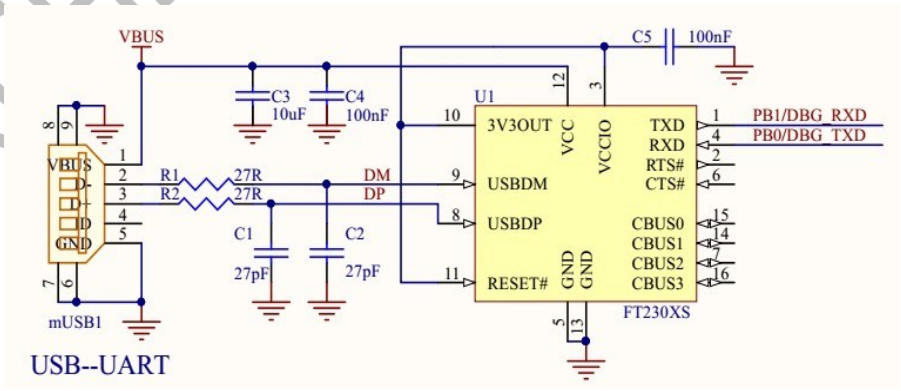

Figure 6 USB to Serial Design

MXCHIP prohibited

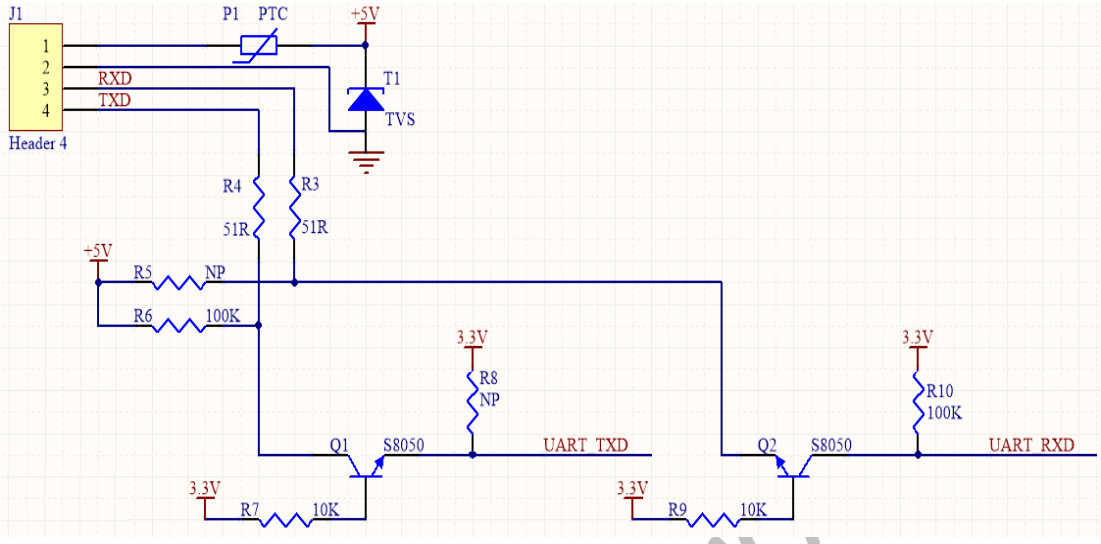

Figure 7 5V UART to 3.3V UART Conversion Design

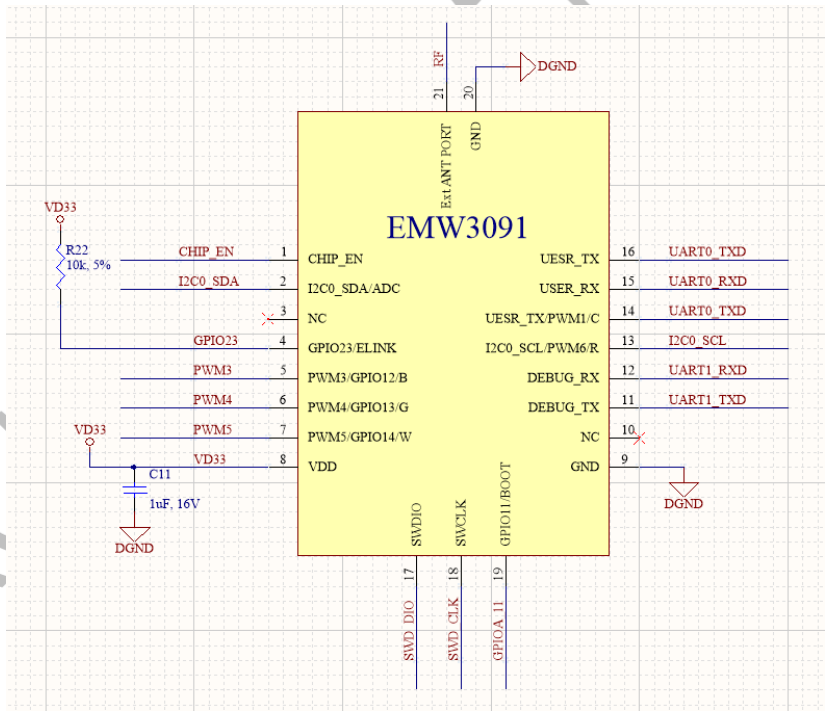

Figure 8 WiFi module Recommended Design

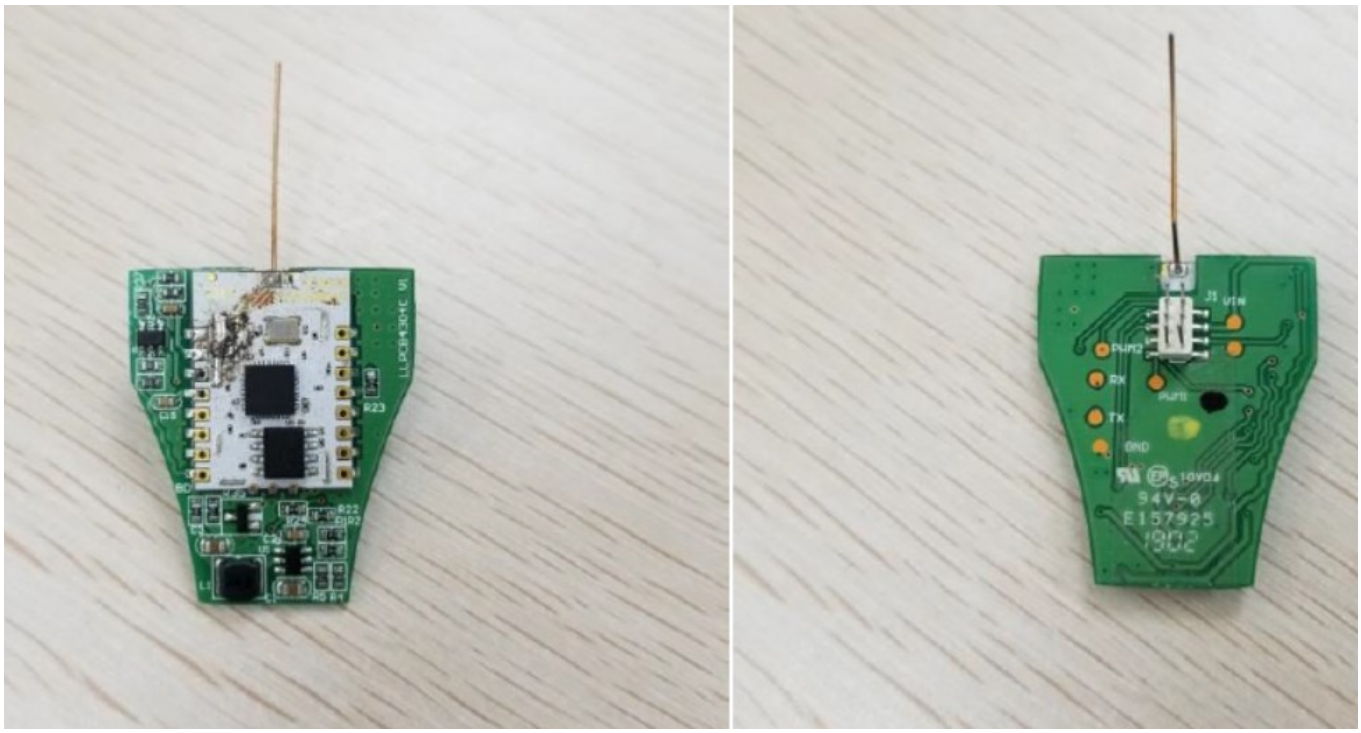

Figure 9 PCB Recommended Design

1.5 RF design

1.5.1 Antenna placement

In the structural design, enough clearance area should be set aside for the antenna. We recommend not less than 15 mm.

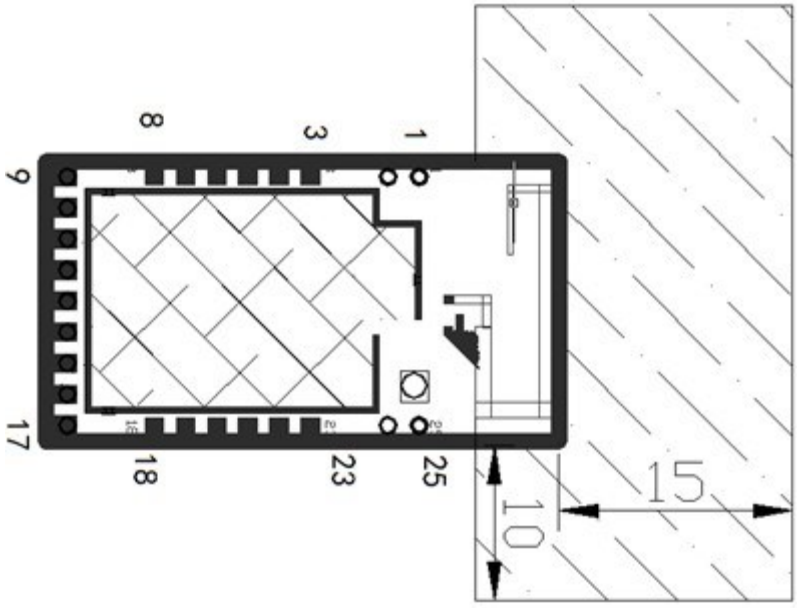

Figure 10 Minimum Size of Keep-out Zone Around Antenna

Areas on the mother board MXCHIP recommended showed below can reduce the noise to Copper tube antenna and radio signal.

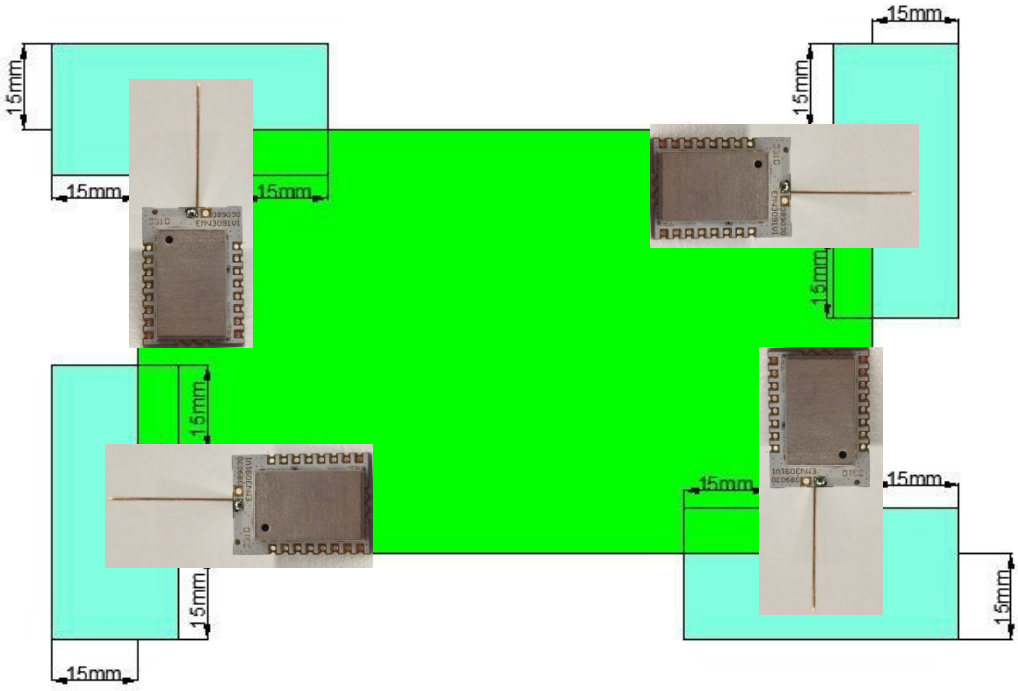

Figure 1 Module Position Recommended on Mother Board

1.5.2. T U.F.L RF Connector

Make sure the connector is matched when choosing the external antenna.

Mechanical dimensions of U.F.L RF connector shows as followed.

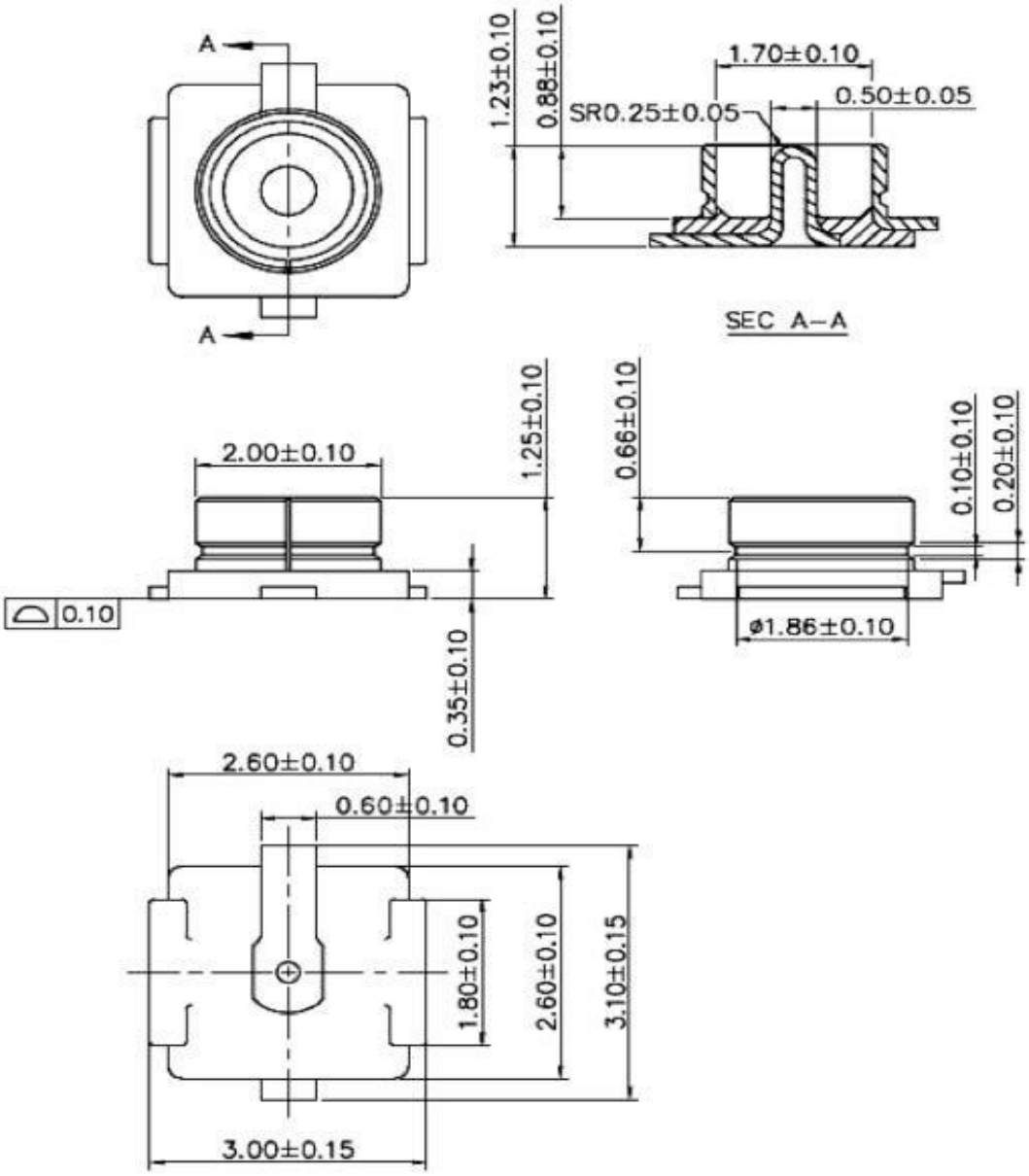

Figure 2 U.F.L Connector Size

1.6 ESD design

ESD grade of module: Human Body Model (HBM) sensitivity is 2000V, Charged Device Model

(CDM) sensitivity is 500V. If a higher ESD level is required, the pins that may be connected to the outside should be reserved place for the ESD protection device.

If the module connects the mother board by outside leads, application designers should notice the EMI problems. Using shield cable or reserving the position for common mode choke to solve this problem.

MXCHIP reprint prohibited

2. Firmware programming and warehouse entry inspection method

2.1 Receiving Inspection Device List

Equipment list shows below:

Equipment	**Quantity**
PC	1（pcs）
Fixture	1（pcs）
EMW3091 Development Board s	1（pcs）

Table 1 Warehouse Entry Inspection Equipment List

Application software and firmware:

CP210x_VCP_Windows (drivers on PC), download link:

http://www.silabs.com/products/mcu/Pages/SoftwareDownloads.aspx

Programming firmware should be confirmed by MXCHIP FAE and guests. Its size is 1M bytes.

The set of the three toggle switches on EMW3091 development board are shown below:

MXCHIP reprint prohibited

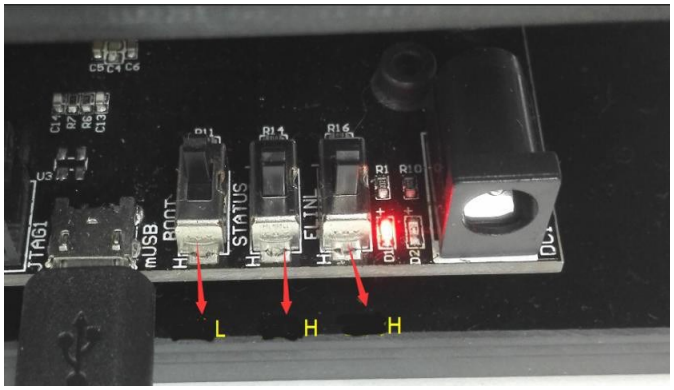

Figure 13 Development Board Switch Settings

2.2 System Connection

Fixture connects to EMW3091 by USB data line. Red led lights if connected.

Figure 3 Power Led

2.3 Firmware programming

Find the COM number where EMW3091 connect with PC in “device manager”:

(notice: COM number must use Enhanced COM Port)

Figure 4 COM Name in Device Manager

MXCHIP reproduce prohibited

Decompress “FWUpdate-3091.rar” and open the file “FWUpdate.exe”. Upload the firmware prepared already. Set COM as “COM 5”. Take “test” for example.

Figure 16 FWUpdate.exe

Put module on fixture and lead the antenna left side. Module auto programs after pressing down the fixture.

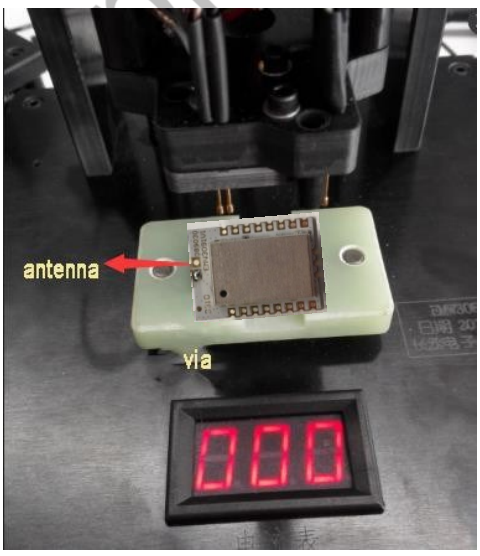

Figure 17 Place Module

Make sure power supply continuing while programming.

MXCHIP Print Prohibited

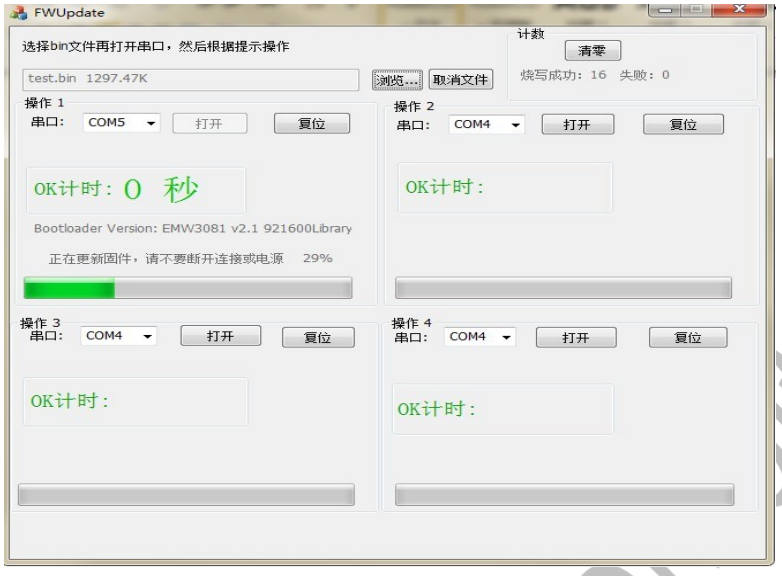

Figure 18 Programming

Program over after the screen shows “Succeed…Please change the module”.

Figure 5 Programming Over

2.4 Testing

Download the testing software “MicoQcAutoCheck-1.2.6.3”.

Download link: http://yunpan.cn/c3dUnVM9mQdng，Access Password : d1a1

MXCHIP not prohibited

Set “BOOT”, “STATUS” switch as “L” and “ELINK” switch as “H”. Place the module on the fixture.

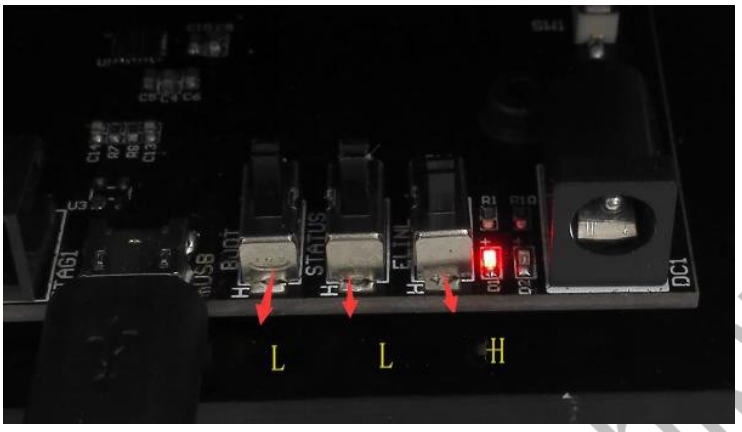

Figure 20 Switch Setting

Open the text “3091 testing method”. Decompress and open the file “MicoQcAutoCheck-1.2.6.3.rar”.

Set up “working number”, “module type”, ”number”, “SN setting”, ”APP CRC”, “boot version”, ”library version”, “app version”, ”drivers version”, “ssid” and “COM number”. et serial baud rate as “921600”.

Click “log in”, then “start”. Place module on fixture. Dialog will analysis the information of the module. Fine module shows as followed:

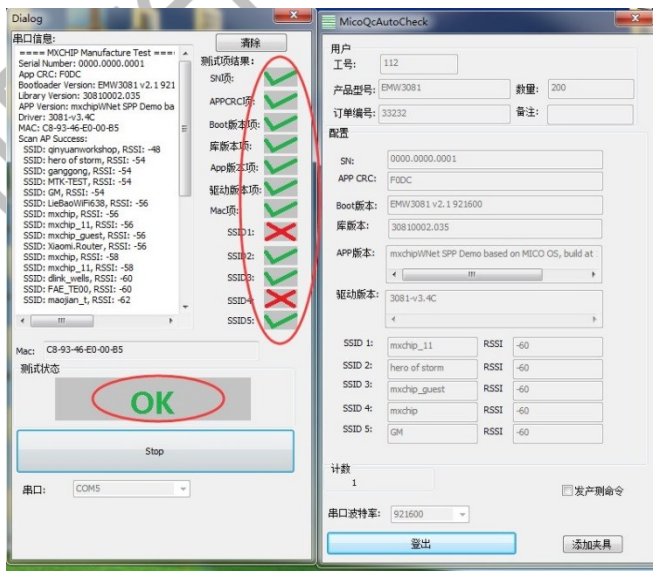

Figure 21 Testing Success

MXCHIP reprint prohibited

The testing results are placed in the file “log”.

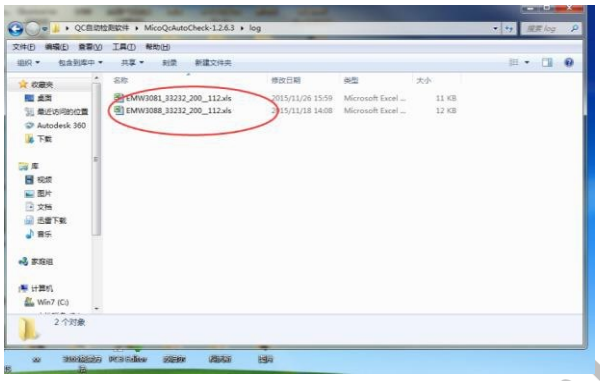

Figure 22 Log Saving

Please refer to the “Programming and Testing Methods of EMW3091.PDF” for more information.

2.5 Statements

- MXCHIP has the obligation to guarantee there is no quality problem for the module delivered at each batch.

- If problems are found while sampling module, customer has the right to require MXCHIP to give a timely replacement.

- If problems are found after welding the module on mother board without any warehousing detection, MXCHIP is only responsible for the compensation of module.

- MXCHIP has the obligation to assist solving various technical problems, without retaining any MVA/BIN file of customer.

- Customer has the obligation to record every firmware version during the firmware developing work and use the proper firmware for production.

MXCHIP reprint prohibited

3. SMT matters

3.1 Note for stencil aperture

The recommended stencil aperture: 0.12mm (0.1~0.15mm), laser polishing hole.

The recommended solder paste is SAC305 and lead free.

The recommended extend length of welding pad: 0.15mm. It can enhance the adhesive ability of solder as shown below.

It can check the right position of the module by eyes if using SMT line without AOI testing to reduce the risk of cold solder joint.

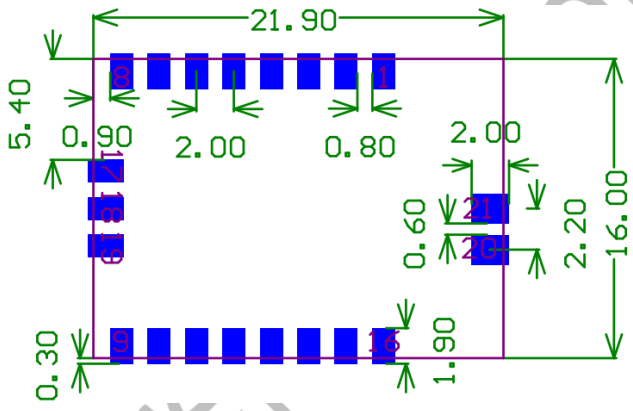

Figure 23 Recommended Stencil Aperture

3.2 Recommended reflow profile

Reflow times <= 2 times.

Peak temperature < 250°C.

Controlling the temperature according to the temperature curve can reduce the risk of welding.

Recommended reflow profile:

MXCHIP reproduction prohibited

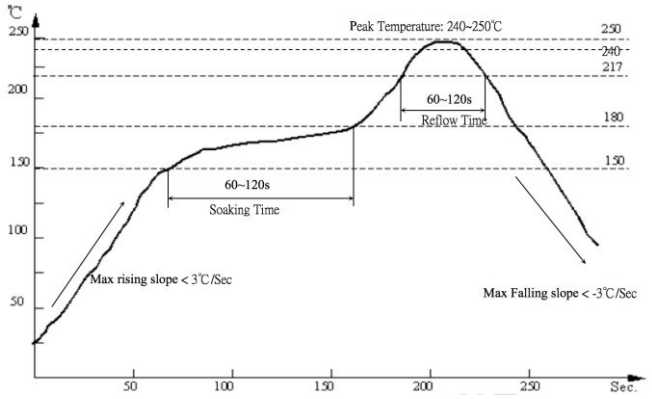

Figure 6 Reflow soldering temperature curve

MXCHIP reprint prohibited

4. Mass production testing and firmware upgrading

In addition to considering the product features, application designer need to think over how to do test and upgrade firmware when developing.

4.1 Mass production test

Avoid finding problem after installing the PCB boards in machine

4.1.1 EMSP command way

Connect the module to the MCU of the mother board by serial port and use the EMSP command.

Choose one triggering way---- set one combination key, to send the test command from the MCU. The test command could be one EMSP command used to scan the APs around or connect one specified AP. The way can test both of the serial function and the RF function.

4.1.2 Limited development firmware

Connect the module to the MCU of the mother board by serial port. Add the test command in the firmware when developing. The test command could be one command from serial port used to scan the APs and return the results by serial port. The way can test both of the serial function and the RF function by using the same triggering way.

4.1.3 Full development firmware

Full development works for the whole application of the project.

Test method could be flexible in the way. It can set a specific way to test every function of the module. The application determines the specific test details.

4.2 Upgrading

Upgrading by OTA is recommended. OTA-over the air, is one wireless upgrading way.

The upgrading method is offered by MXCHIP. Several application cases are provided as referenced.

Firmware could be upgraded to the latest version by OTA with this upgrading method applied.

MXCHIP reprint prohibited

5. Firmware encrypt

In order to make sure the firmware could not be modified after programming in the module, firmware must be encrypted with the bootloader drivers and the chip ID MXCHIP offered.

Bootloader driver is used to drive the device in the module and integrated with one AES encryption way. The application part of the firmware must be combined with the bootloader driver to generate one MVA/bin file after adding the chip ID details which can be used to identify MXCHIP module. Check the official website for more information.

6. Sales and technical support information

If you need to buy this product, please call MXCHIP during the working hours.

(Monday ~ Friday ： A.M. 9:00~12:00; P.M. 1:00~6:00)

Telephone: +86-021-52655026
Address: 9th Floor, 5# building, Lane 2145, Jinshajiang Road, Putuo District, Shanghai
Post Code: 200333
Email: sales@mxchip.com
Company email: http://www.mxchip.com
For the latest information about products, please refer to: http://www.mxchip.com
Related technical support please contact:
a. Wireless network technology support:
+86 (21) 52655026-812, Email: support@mxchip.com.
b. Technical support for development tools:
+86 (21) 52655026-822, Email: support@mxchip.com.

MXCHIP reprint prohibited

ISED Notice

This device complies with Innovation, Science and Economic Development Canada license-exempt RSS standard(s). Operation is subject to the following two conditions:
(1) this device may not cause interference, and
(2) this device must accept any interference, including interference that may cause undesired operation of the device.

Le présent appareil est conforme aux CNR Innovation, Sciences et Développement économique Canada applicables aux appareils radio exempts de licence. L'exploitation est autorisée aux deux conditions suivantes:
(1) l'appareil ne doit pas produire de brouillage, et
(2) l'utilisateur de l'appareil doit accepter tout brouillage radioélectrique subi, même si le brouillage est susceptible d'en

ISED Radiation Exposure Statement

This device complies with RSS-102 radiation exposure limits set forth for an uncontrolled environment. In order to avoid the possibility of exceeding the ISED radio frequency exposure limits, human proximity to the antenna shall not be less than 20cm (8 inches) during normal operation.

Cet appareil est conforme aux limites d'exposition aux rayonnements de la CNR-102 définies pour un environnement non contrôlé. Afin d'éviter la possibilité de dépasser les limites d'exposition aux fréquences radio de la CNR-102, la proximité humaine à l'antenne ne doit pas être inférieure à 20 cm (8 pouces) pendant le fonctionnement normal.

LABEL OF THE END PRODUCT:

The Innovation, Science and Economic Development Canada certification label of a module shall be clearly visible at all times when installed in the host device; otherwise, the host device must be labeled to display the Innovation, Science and Economic Development Canada certification number for the module, preceded by the words “Contains transmitter module IC: 23507-EMW3091”.

FCC Regulations:

This device complies with part 15 of the FCC Rules. Operation is subject to the following two conditions: (1) This device may not cause harmful interference, and (2) This device must accept any interference received, including interference that may cause undesired operation.

This device has been tested and found to comply with the limits for a Class B digital device , pursuant to Part 15 of the FCC Rules. These limits are designed to provide reasonable protection against harmful interference in a residential installation. This equipment generates, uses and can radiated radio frequency energy and, if not installed and used in accordance with the instructions, may cause harmful interference to radio communications. However, there is no guarantee that interference will not occur in a particular installation If this equipment does cause harmful interference to radio or television reception, which can be determined by turning the equipment off and on, the user is encouraged to try to correct the interference by one or more of the following measures:

-Reorient or relocate the receiving antenna.
-Increase the separation between the equipment and receiver.
-Connect the equipment into an outlet on a circuit different from that to which the receiver is connected.
-Consult the dealer or an experienced radio/TV technician for help.
Caution: Changes or modifications not expressly approved by the party responsible for compliance could void the user‘s authority to operate the equipment.

RF Exposure Information

This device complies with FCC radiation exposure limits set forth for an uncontrolled environment. In order to avoid the possibility of exceeding the FCC radio frequency exposure limits, human proximity to the antenna shall not be less than 20cm (8 inches) during normal operation.

OEM/Integrators Installation Manual

Important Notice to OEM integrators

1. This module is limited to OEM installation ONLY.
2. This module is limited to installation in mobile or fixed applications, according to Part 2.1091(b).
3. The separate approval is required for all other operating configurations, including portable configurations with respect to Part 2.1093 and different antenna configurations
4. For FCC Part 15.31 (h) and (k): The host manufacturer is responsible for additional testing to verify compliance as a composite system. When testing the host device for compliance with Part 15 Subpart B, the host manufacturer is required to show compliance with Part 15 Subpart B while the transmitter module(s) are installed and operating. The modules should be transmitting and the evaluation should confirm that the module's intentional emissions are compliant (i.e. fundamental and out of band emissions). The host manufacturer must verify that there are no additional unintentional emissions other than what is permitted in Part 15 Subpart B or emissions are complaint with the transmitter(s) rule(s). The Grantee will provide guidance to the host manufacturer for Part 15B requirements if needed.

End Product Labeling

When the module is installed in the host device, the FCC ID label must be visible through a window on the final device or it must be visible when an access panel, door or cover is easily re-moved. If not, a second label must be placed on the outside of the final device that contains the following text: “Contains FCC ID: P53-EMW3091”
The FCC ID can be used only when all FCC compliance requirements are met.

Antenna Installation

(1) The antenna must be installed such that 20 cm is maintained between the antenna and users,
(2) The transmitter module may not be co-located with any other transmitter or antenna.
(3) Only antennas of the same type and with equal or less gains as mentioned above may be used with this module. Other types of antennas and/or higher gain antennas may require additional authorization for operation.

In the event that these conditions cannot be met (for example certain laptop configurations or co-location with another transmitter), then the FCC authorization is no longer considered valid and the FCC ID cannot be used on the final product. In these circumstances, the OEM integrator will be responsible for re-evaluating the end product (including the transmitter) and obtaining a separate FCC authorization.

Manual Information to the End User

The OEM integrator has to be aware not to provide information to the end user regarding how to install or remove this RF module in the user’s manual of the end product which integrates this module. The end user manual shall include all required regulatory information/warning as show in this manual.

official name： Sengled USA,INC.
address： 155 Bluegrass Valley Parkway, Suite 200, Alpharetta, GA 30005
phone number is (678)257-4800.