FCC Part 15 Subpart C

EMI TEST REPORT

of

E.U.T. : WIRELESS MONITOR WITH CAMERA

FCC ID. : P5B-2301

MODEL : 2301

Working Frequency : 2400-2483.5MHz

for

APPLICANT : SHENZHEN KONLIKA ELECTRONICS CO., LTD.
ADDRESS : 3F, NO.6 BLDG., BAIMENQIAN INDUSTRIAL AREA, SHAWAN TOWN, SHENZHEN, CHINA

Test Performed by

ELECTRONICS TESTING CENTER, TAIWAN
NO. 8 LANE 29, WENMIMG ROAD,
LOSHAN TSUN, KWEISHAN HSIANG,
TAOYUAN, TAIWAN, R.O.C.

Tel:(03)3276170-3276174
Fax:(03)3276188
Report Number : ET90S-08-048-03

TEST REPORT CERTIFICATION

Applicant : SHENZHEN KONLIKA ELECTRONICS CO., LTD.
3F, NO.6 BLDG., BAIMENQIAN INDUSTRIAL AREA, SHAWAN TOWN, SHENZHEN CHINA

Manufacturer : SHENZHEN WANJIA ELECTRICAL CO., LTD.
5F, NO.6 BLDG., BAIMENQIAN INDUSTRIAL AREA, SHAWAN TOWN, SHENZHEN CHINA

Description of EUT :

a) Type of EUT	: WIRELESS MONITOR WITH CAMERA
b) Trade Name	: SWJ
c) Model No.	: 2301
d) FCC ID	: P5B-2301
e) Working Frequency	: 2400-2483.5MHz
f) Power Supply	: Adapter I/P AC 120V/60Hz, O/P DC 12V, 300mA

Regulation Applied : FCC Rules and Regulations Part 15 Subpart C (1996)

I HEREBY CERTIFY THAT; The data shown in this report were made in accordance with the procedures given in ANSI C63.4 and the energy emitted by the device was founded to be within the limits applicable. I assume full responsibility for accuracy and completeness of these data.

Note : 1. The results of the testing report relate only to the items tested.
2. The testing report shall not be reproduced except in full, without the written approval of ETC.

Test Date : Aug. 10, 2001

Test Engineer : Tai Cheng Huang

Approve & Authorized Signer : Win-Po Tsai

Win-Po Tsai, Manager, NVLAP Signatory
EMC Dept. I of ELECTRONICS
TESTING CENTER, TAIWAN

Table of Contents Page

1. GENERAL INFORMATION 1

1.1 PRODUCT DESCRIPTION 1
1.2 CHARACTERISTICS OF DEVICE: 1
1.3 TEST METHODOLOGY 1
1.4 TEST FACILITY 2

2. DEFINITION AND LIMITS 3

2.1 DEFINITION 3
2.2 RESTRICTED BANDS OF OPERATION 3
2.3 LIMITATION 3
2.4 LABELING REQUIREMENT 5
2.5 USER INFORMATION 5

3. RADIATED EMISSION MEASUREMENT 6

3.1 APPLICABLE STANDARD 6
3.2 MEASUREMENT PROCEDURE 6
3.3 TEST DATA 8
3.4 FIELD STRENGTH CALCULATION 11
3.5 RADIATED TEST EQUIPMENT 11
3.6 MEASURING INSTRUMENT SETUP 12
3.7 RADIATED MEASUREMENT PHOTOS 12

4. CONDUCTED EMISSION MEASUREMENT 13

4.1 APPLICABLE STANDARD 13
4.2 MEASUREMENT PROCEDURE 13
4.3 CONDUCTED EMISSION DATA 14
4.4 RESULT DATA CALCULATION 23
4.5 CONDUCTED MEASUREMENT EQUIPMENT 23
4.6 CONDUCTED MEASUREMENT PHOTOS 23

1. GENERAL INFORMATION

1.1 Product Description

a) Type of EUT	: WIRELESS MONITOR WITH CAMERA
b) Trade Name	: SWJ
c) Model No.	: 2301
d) FCC ID	: P5B-2301
e) Working Frequency	: 2400-2483.5MHz
f) Power Supply	: Adapter I/P AC 120V/60Hz; O/P DC 12V, 300mA

1.2 Characteristics of Device:

WIRELESS VIDEO CAMERA AND CLEAR 5.5' MONITOR
2.4 GHz SIGNAL AVOIDS INTERFERENCE FROM CROWDED 900 MHz BAND
SENDS AND RECEIVES CRISP VIDEO AND AUDIO WIRELESSLY
EASY TO INSTALL
INFRARED TECHNOLOGY PROVIDES A BRIGHT VIEW, EVEN IN A DARKENED ROOM
THIS SYSTEM WILL ALLOW YOU TO BE IM MORE THAN ONE PLACE AT A TIME
MULTI-PURPOSE: BABY, SECURITY, SICK ROOM, FAMILY ROOM, DOOR, STOCK ,CUSTOMER, EMPLOYEE, ETC.
AV TERMINAL IS PROVIDED FOR TV AND VIDEO CASSETTE RECORDER

1.3 Test Methodology

Radiated testing were performed according to the procedures in chapter 13 of ANSI C63.4.
The WIRELESS MONITOR WITH CAMERA under test was operated continuously in its normal operating mode for the purpose of the measurements. In order to secure the continuous operation of the device under test, rewiring in the circuit was done by the manufacturer so as to affect its intended operation.
The receiving antenna was varied from 1 to 4 meters and the wooden turntable was rotated through 360 degrees to obtain the highest reading on the field strength meter or on the display of the spectrum analyzer. And also, each emission was to be maximized by changing the orientation of the WIRELESS MONITOR WITH CAMERA under test. The hand-held or body-worn devices rotated through three orthogonal axes to determine which attitude and configuration produces the highest emission relatives to the limit.

1.4 Test Facility

The semi-anechoic chamber and conducted measurement facility used to collect the radiated and conducted data are located inside the Building at No.8, Lane 29, Wen-ming Road, Lo-shan Tsun, Kweishan Hsiang, Taoyuan, Taiwan, R.O.C.
This site has been accreditation as a FCC filing site.

2. DEFINITION AND LIMITS

2.1 Definition

Intentional radiator:
A device that intentionally generates and emits radio frequency energy by radiation or induction.

2.2 Restricted Bands of Operation

Only spurious emissions are permitted in any of the frequency bands listed below:

MHz	MHz	MHz	GHz
0.090 - 0.110	16.42-16.423	399.9-410	4.5-5.25
0.495 - 0.505 **	16.69475 - 16.69525	608-614	5.35-5.46
2.1735 - 2.1905	16.80425 - 16.80475	960-1240	7.25-7.75
4.125-4.128	25.5-25.67	1300-1427	8.025-8.5
4.17725-4.17775	37.5-38.25	1435-1626.5	9.0-9.2
4.20725-4.20775	73-74.6	1645.5-1646.5	9.3-9.5
6.215-6.218	74.8-75.2	1660-1710	10.6-12.7
6.26775-6.26825	108-121.94	1718.8-1722.2	13.25-13.4
6.31175-6.31225	123-138	2200-2300	14.47-14.5
8.291-8.294	149.9-150.05	2310-2390	15.35-16.2
8.362-8.366	156.52475 - 156.52525	2483.5-2500	17.7-21.4
8.37625-8.38675	156.7-156.9	2655-2900	22.01-23.12
8.41425-8.41475	162.0125-167.17	3260-3267	23.6-24.0
12.29-12.293	167.72-173.2	3332-3339	31.2-31.8
12.51975-12.52025	240-285	3345.8-3358	36.43-36.5
12.57675-12.57725	322-335.4	3360-4400	Above 38.6
13.36-13.41			

Remark "**" : Until February 1, 1999, this restricted band shall be 0.490-0.510 MHz

2.3 Limitation

(1) Conducted Emission Limits :

For an intentional radiator which is designed to be connected to the public utility (AC) power line, the conducted limit is the following:

Frequency (MHz)	Emission (μV)	Emission (dBμV)
0.45 - 30.0	250	48.0

(2) Radiated Emission Limits :

According to 15.249, the field strength of emissions from intentional radiators operated under this section shall not exceed the following:

Frequency Band (MHz)	Field strength of Fundamental (mV/m)	Field strength of Spurious (uV/m)
902 – 928	50	500
2400 – 2483.5	50	500
5725 – 5875	50	500
24.0 – 24.25 GHz	250	2500

Field strength limits are at the distance of 3 meters, emissions radiated outside of the specified bands, except for harmonics, shall be attenuated by at least 50 dB below the level of the fundamental or to the general radiated limits in 15.209, as following table(whichever is the lesser attenuation):

Other Frequencies (MHz)	Field Strength of Fundamental	
	µV/meter	dBµV/meter
30 - 88	100	40.0
88 - 216	150	43.5
216 - 960	200	46.0
Above 960	500	54.0

As shown in 15.35(b), for frequencies above 1000MHz, the field strength limits are based on average detector, however, the peak field strength of any emission shall not exceed the maximum permitted average limits, specified above by more than 20 dB under any condition of modulation.

2.4 Labeling Requirement

The device shall bear the following statement in a conspicuous location on the device :

This device complies with part 15 of the FCC Rules. Operation is subject to the following two conditions: (1) This device may not cause harmful interference, and (2) this device must accept any interference received, including interference that may cause undesired operation.

2.5 User Information

The users manual or instruction manual for an intentional or unintentional radiator shall caution the user that changes or modifications not expressly approved by the party responsible for compliance could void the user's authority to operate the equipment.

3. RADIATED EMISSION MEASUREMENT

3.1 Applicable Standard

For periodic operation intentional radiator, the radiated emission shall comply with § 15.249 and 15.209.

3.2 Measurement Procedure

1. Setup the configuration per figure 1 and 2 for frequencies measured below and above 1 GHz respectively. Turn on EUT and make sure that it is in normal function.
2. For emission frequencies measured below 1 GHz, a pre-scan is performed in a semi-anechoic chamber to determine the accurate frequencies of higher emissions and then each selected frequency is precisely measured. As the same purpose, for emission measured above 1 GHz, a pre-scan also be performed with a 1 meter measuring distance before final test.
3. For emission measured below and above 1 GHz, set the spectrum analyzer on a 100 kHz and 1 MHz resolution bandwidth respectively for each frequency measured in step 2.
4. The search antenna is to be raised and lowered over a range from 1 to 4 meters in horizontally polarized orientation. Position the highness when the highest value is indicated on spectrum analyzer, then change the orientation of EUT on test table over a range from 0° to 360° with a speed as slow as possible, and keep the azimuth that highest emission is indicated on the spectrum analyzer. Vary the antenna position again and record the highest value as a final reading. A RF test receiver is also used to confirm emissions measured.
5. Repeat step 4 until all frequencies that need to be measured were complete.
6. Repeat step 5 with search antenna in vertical polarized orientations.
7. Check the frequencies of highest emission with varying the placement of cables (if any) associated with EUT to obtain the worse case and record the result.

Figure 1 : Frequencies measured below 1 GHz configuration

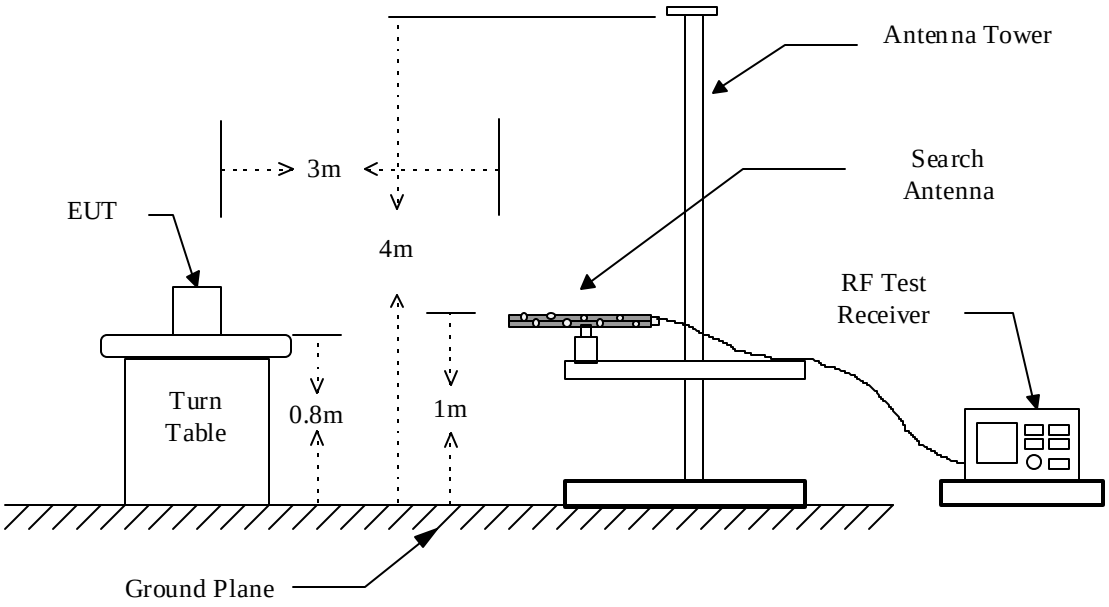

Figure 2 : Frequencies measured above 1 GHz configuration

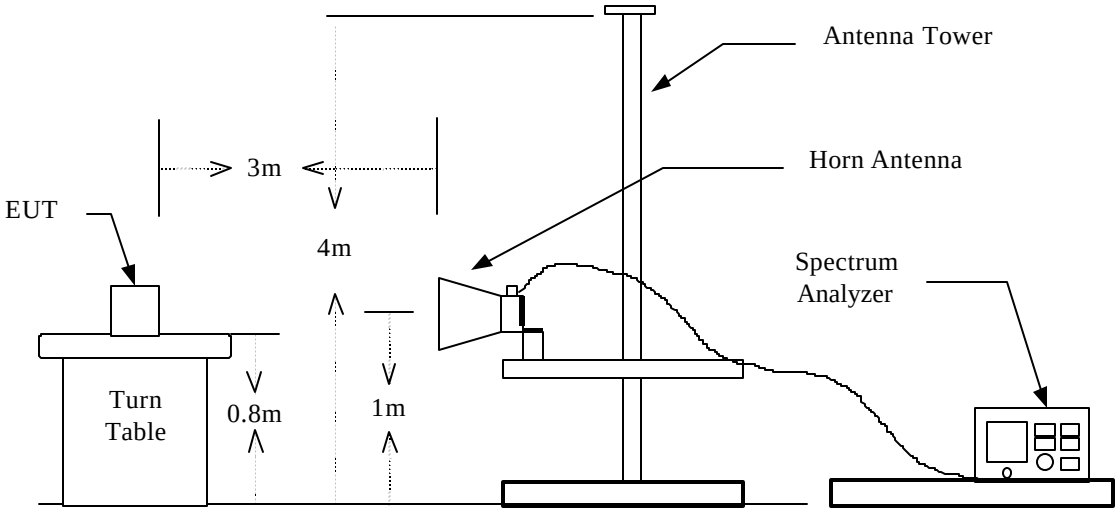

3.3 Test Data

Data 1 : Fundamental & Harmonics

Temperature : 26 ℃
Humidity : 65%
Test Date : Aug. 10, 2001

3.3.1 CH1

Frequency (MHz)	Ant Pol H/V	Reading (dBuV) Peak	Reading (dBuV) Avg	Correct Factor (dB) Ant.	Correct Factor (dB) Duty	Result @3m (dBuV/m) Peak	Result @3m (dBuV/m) Avg	Limit @3m (dBuV/m) Peak	Limit @3m (dBuV/m) Avg	Margin (dB)	Table Degree (Deg.)	Ant. High (m)
2413.320	H	79.5	77.3	-3.1	0	76.4	74.2	114.0	94.0	-19.8	0	1.5
2143.320	V	84.7	81.5	-3.1	0	81.6	78.4	114.0	94.0	-15.6	0	1.5
4826.670	H	43.9	35.6	2.5	0	46.4	38.1	74.0	54.0	-15.9	167	1.5
4826.670	V	43.7	34.0	2.5	0	46.2	36.5	74.0	54.0	-17.5	167	1.2

3.3.2 CH3

Frequency (MHz)	Ant Pol H/V	Reading (dBuV) Peak	Reading (dBuV) Avg	Correct Factor (dB) Ant.	Correct Factor (dB) Duty	Result @3m (dBuV/m) Peak	Result @3m (dBuV/m) Avg	Limit @3m (dBuV/m) Peak	Limit @3m (dBuV/m) Avg	Margin (dB)	Table Degree (Deg.)	Ant. High (m)
2451.500	H	77.0	73.1	-3.1	0	73.9	70.0	114.0	94.0	-24.0	85	1.3
2451.500	V	84.0	80.3	-3.1	0	80.9	77.2	114.0	94.0	-16.8	0	1.5
4903.000	H	43.5	33.8	2.7	0	46.2	36.5	74.0	54.0	-17.5	170	1.3
4903.000	V	42.1	32.0	2.7	0	44.8	34.7	74.0	54.0	-19.3	230	1.3

3.3.3 CH4

Frequency (MHz)	Ant Pol H/V	Reading (dBuV) Peak	Reading (dBuV) Avg	Correct Factor (dB) Ant.	Correct Factor (dB) Duty	Result @3m (dBuV/m) Peak	Result @3m (dBuV/m) Avg	Limit @3m (dBuV/m) Peak	Limit @3m (dBuV/m) Avg	Margin (dB)	Table Degree (Deg.)	Ant. High (m)
2470.300	H	75.5	71.6	-3.1	0	72.4	68.5	114.0	94.0	-25.5	40	1.5
2470.300	V	82.5	79.3	-3.1	0	79.4	76.2	114.0	94.0	-17.8	0	1.5
4940.630	H	41.5	29.8	2.7	0	44.2	32.5	74.0	54.0	-21.5	180	1.3
4940.630	V	41.8	30.8	2.7	0	44.5	33.5	74.0	54.0	-20.5	180	1.5

Note :

1. Limit on the field strength of funcdamental (Average)
   50mV/m = 20xlog(50000) = 94.0 dBμV/m
2. Limit on the field strength of Harmonics(Average)
   500μV/m = 20xlog(500) = 54.0 dBμV/m
3. If the measured frequencies fall in the restricted frequency band, the limit employed is § 15.209 general requirement when frequencies are below or equal to 1 GHz. And the measuring instrument is set to quasi peak detector function, no duty factor applied.
4. The radiation emissions have been measuredd to beyond the tenth harmonic of the fundamental frequency and show the significant frequencies, other means the value is too low to be detected.
5. If the data table appeared symbol of "***" means the value is too low to be measured.
6. The system amplitude accuracy of the measurement made during the radiated emission tests was ±4dB.

Data 2: Other emissions

Temperature : 22 ℃
Humidity : 60%
Test Date : Aug. 08, 2001

3.3.5 CH1

Emission Frequency (MHz)	**Meter Reading** (dBμV)		**Corr'd Factor** (dB)	**Results** (dBμV/m)		**AH** (m)		**DRT degree**		**Limit** @3m (dBμV/m)	**Margin** (dB)
	Hor.	Ver.		Hor.	Ver.	Hor.	Ver.	Hor.	Ver.		
49.163	8.6	18.7	11.8	20.4	30.5	2.0	1.0	330	51	40.0	-9.5
55.318	***	13.7	9.6	***	23.3	***	1.0	***	0	40.0	-16.7
73.750	10.3	14.0	9.0	19.3	23.0	2.9	1.0	0	0	40.0	-17.0

Note:

1. AH means antenna height, DRT means degrees of rotation of turntable.
2. If the data table appeared symbol of "***" means the value is too low to be measured.
3. The system amplitude accuracy of the measurement made during the radiated emission tests was ±4dB.

3.4 Field Strength Calculation

The field strength is calculated by adding the Antenna Factor and Cable Factor, and subtracting the Amplifier Gain (if any) from the measured reading. The basic equation with a sample calculation is as follows:

RESULT = READING + CORR. FACTOR

where CORR. FACTOR = Antenna FACTOR + Cable FACTOR

Assume a receiver reading of 22.5 dBμV is obtained. The Antenna Factor of 14.5 and a Cable Factor of 1.5 is added. The total of field strength is 38.5 dBμV/m.

RESULT = 22.5 + 14.5 + 1.5 = 38.5 dBμV/m
Level in μV/m = Common Antilogarithm[(38.5 dBμV/m)/20]
= 84.14 μV/m

3.5 Radiated Test Equipment

The following instrument are used for radiated emissions measurement :

Equipment	Manufacturer	Model No.	Serial No.	Calibrated until
EMI Test Receiver	Hewlett-Packard	8546A	13054404-001	Nov. 06, 2001
LogBicone Antenna	Schwarzbeck	VULB9160	13057310-001	Sep. 18, 2001
Horn Antenna	EMCO	3115	9804-5454	May 15, 2002
Amplifier	Hewlett-Packard	8449B	3008400936	May 10, 2002
Spectrum	Hewlett-Packard	8564E	11760	Apr. 23, 2002

Note: The standards used to perform this calibration are traceable to NML/ROC, NIST/USA and NPL.

Measuring instrument setup in measured frequency band when specified detector function is used :

Frequency Band (MHz)	Instrument	Function	Resolution bandwidth	Video Bandwidth
30 to 1000	RF Test Receiver	Quasi-Peak	120 kHz	N/A
	Spectrum Analyzer	Peak	100 kHz	100 kHz
Above 1000	Spectrum Analyzer	Peak	1 MHz	1 MHz
	Spectrum Analyzer	Average	1 MHz	Auto

3.6 Measuring Instrument Setup

Explanation of measuring instrument setup in frequency band measured is as following :

Frequency Band (MHz)	Instrument	Function	Resolution bandwidth	Video Bandwidth
30 to 1000	RF Test Receiver	Quasi Peak	120 kHz	N/A
	Spectrum Analyzer	Peak	100 kHz	100 kHz
Above 1000	Spectrum Analyzer	Peak	1 MHz	1 MHz

3.7 Radiated Measurement Photos

Please see Test Setup Photos files: “RE01.jpg”, “RE02.jpg”.

4. CONDUCTED EMISSION MEASUREMENT

4.1 Applicable Standard

For unintentional digital devices, Line Conducted Emission Limits are in accordance to § 15.107(a) . And according to § 15.107(e), an alternative to the conducted limits is CISPR 22.

4.2 Measurement Procedure

1. Setup the configuration per figure 3.
2. A preliminary scan with a spectrum monitor is performed to identify the frequency of emission that has the highest amplitude relative to the limit by operating the EUT in selected modes of operation, typical cable positions, and with a typical system configuration.
3. Record the 4 to 8 highest emissions relative to the limit.
4. Measure each frequency obtained from step 3 by a test receiver set on quasi peak detector function, and then record the accuracy frequency and emission level. If all emissions measured in the specified band are attenuated more than 20 dB from the limit, this step would be ignored, and the peak detector function would be used.
5. Confirm the highest emissions with variation of the EUT cable configuration and record the final data.
6. Repeat all above procedures on measuring each operation mode of EUT.

Figure 3 : Conducted emissions measurement configuration

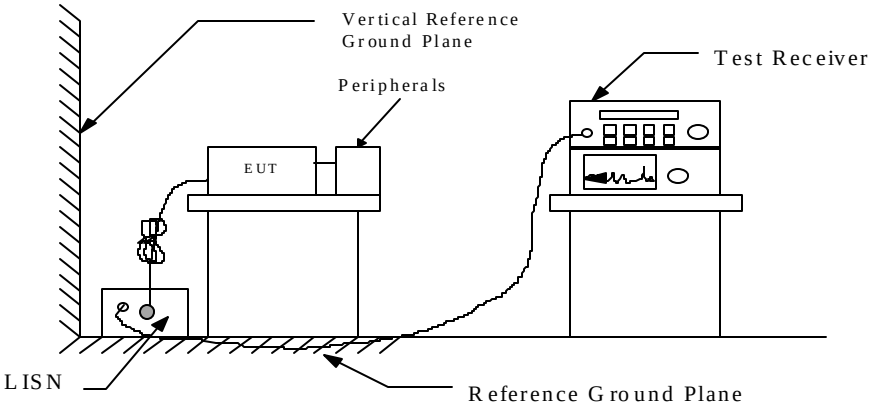

4.3 Conducted Emission Data

4.3.1 CH1

Temperature : 23 ℃
Humidity : 62%
Test Date : Aug. 08, 2001

Emission Frequency (MHz)	**Meter Reading** (dBuV)		**CORR'd Factor** (dB)	**Results** (dBuV)		**Limit** (dBuV)	**Margins** (dB)
	L1	L2		L1	L2		
0.450	35.2	26.6	0.1	35.3	26.7	48.0	-12.7
0.500	28.7	17.7	0.1	28.8	17.8	48.0	-19.2
0.800	25.6	29.3	0.1	25.7	29.4	48.0	-18.6
0.860	27.0	29.6	0.1	27.1	29.7	48.0	-18.3
1.400	28.1	26.9	0.2	28.3	27.1	48.0	-19.7
1.500	28.0	24.6	0.2	28.2	24.8	48.0	-19.8

Note :

1. The full frequency range scanning test data is shown in next two pages.
2. If the data table appeared symbol of "***" means the value is too low to be measured.
3. The system amplitude accuracy of the measurement made during the radiated emission tested was ±3dB.

Graphic of Conducted Emission 1

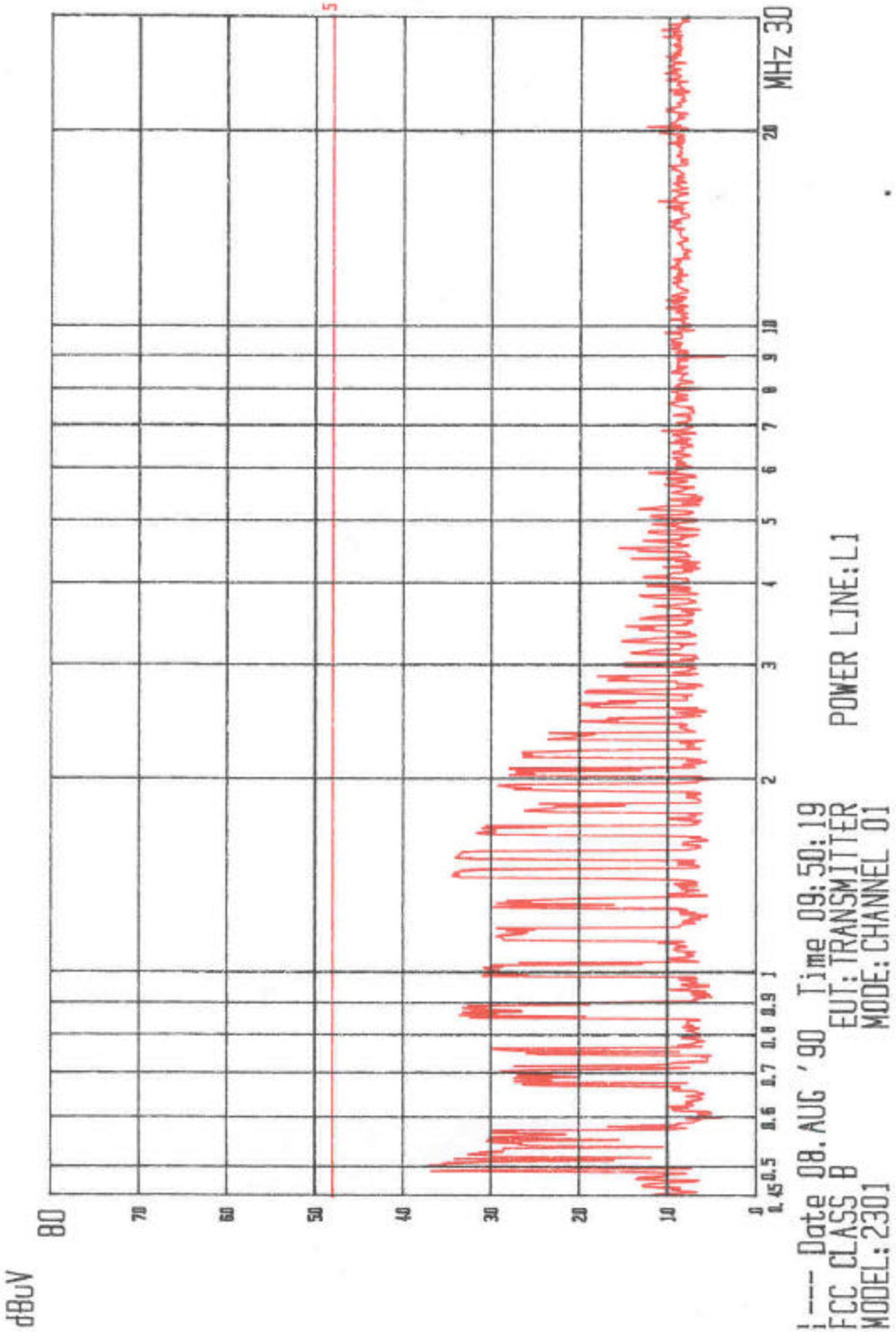

Graphic of Conducted Emission 2

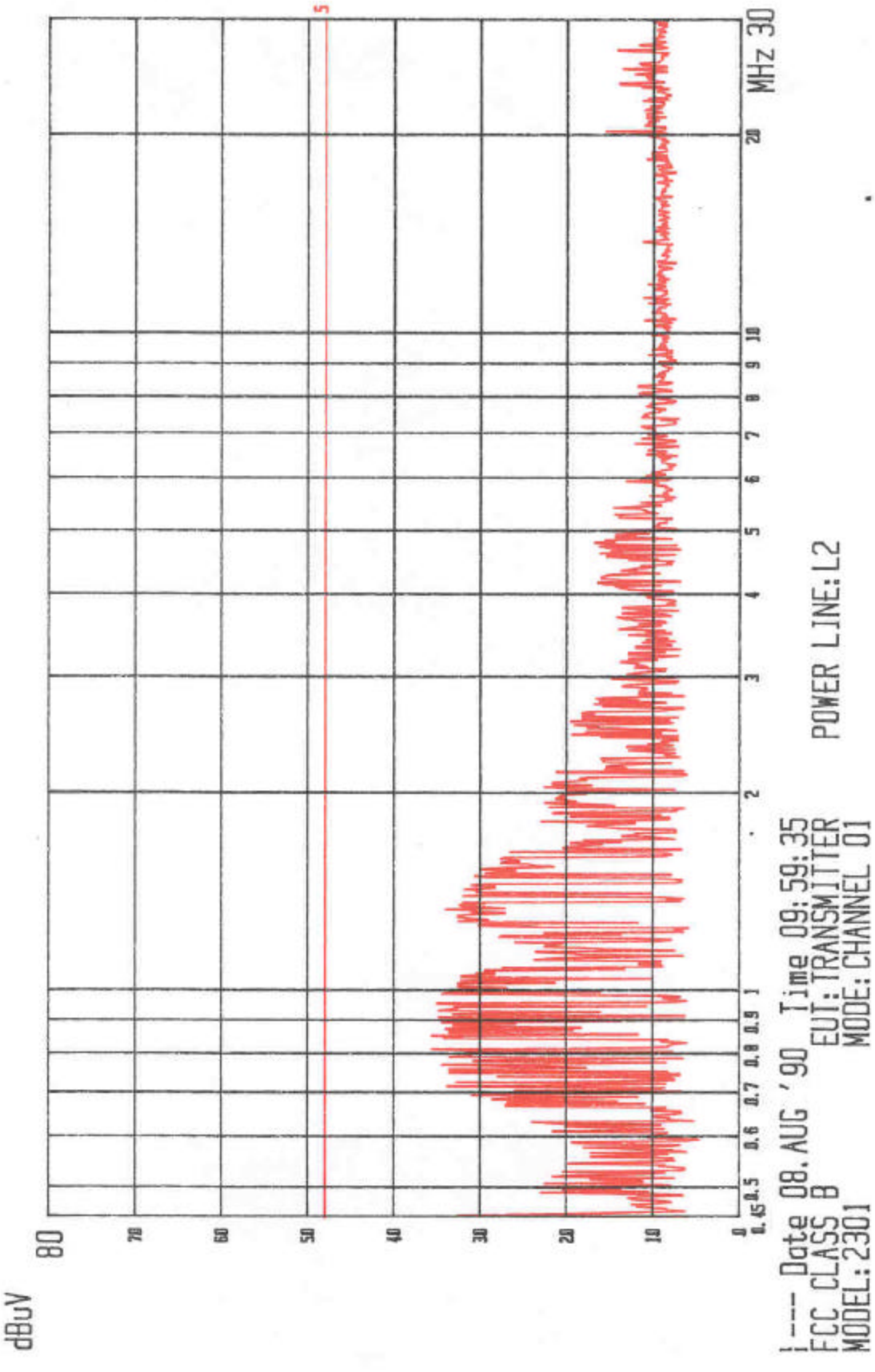

4.3.2 CH3

Temperature : 23 ℃
Humidity : 62%
Test Date : Aug. 08, 2001

Emission Frequency (MHz)	**Meter Reading** (dBuV)		**CORR'd Factor** (dB)	**Results** (dBuV)		**Limit** (dBuV)	**Margins** (dB)
	L1	L2		L1	L2		
0.450	32.4	25.6	0.1	32.5	25.7	48.0	-15.5
0.500	27.0	17.5	0.1	27.1	17.6	48.0	-20.9
0.800	27.2	29.3	0.1	27.3	29.4	48.0	-18.6
0.900	26.0	29.3	0.1	26.1	29.4	48.0	-18.6
1.270	27.6	27.9	0.2	27.8	28.1	48.0	-19.9
1.430	28.0	25.8	0.2	28.2	26.0	48.0	-19.8

Note :

1. The full frequency range scanning test data is shown in next two pages.
2. If the data table appeared symbol of "***" means the value is too low to be measured.
3. The system amplitude accuracy of the measurement made during the radiated emission tested was ±3dB.

Graphic of Conducted Emission 1

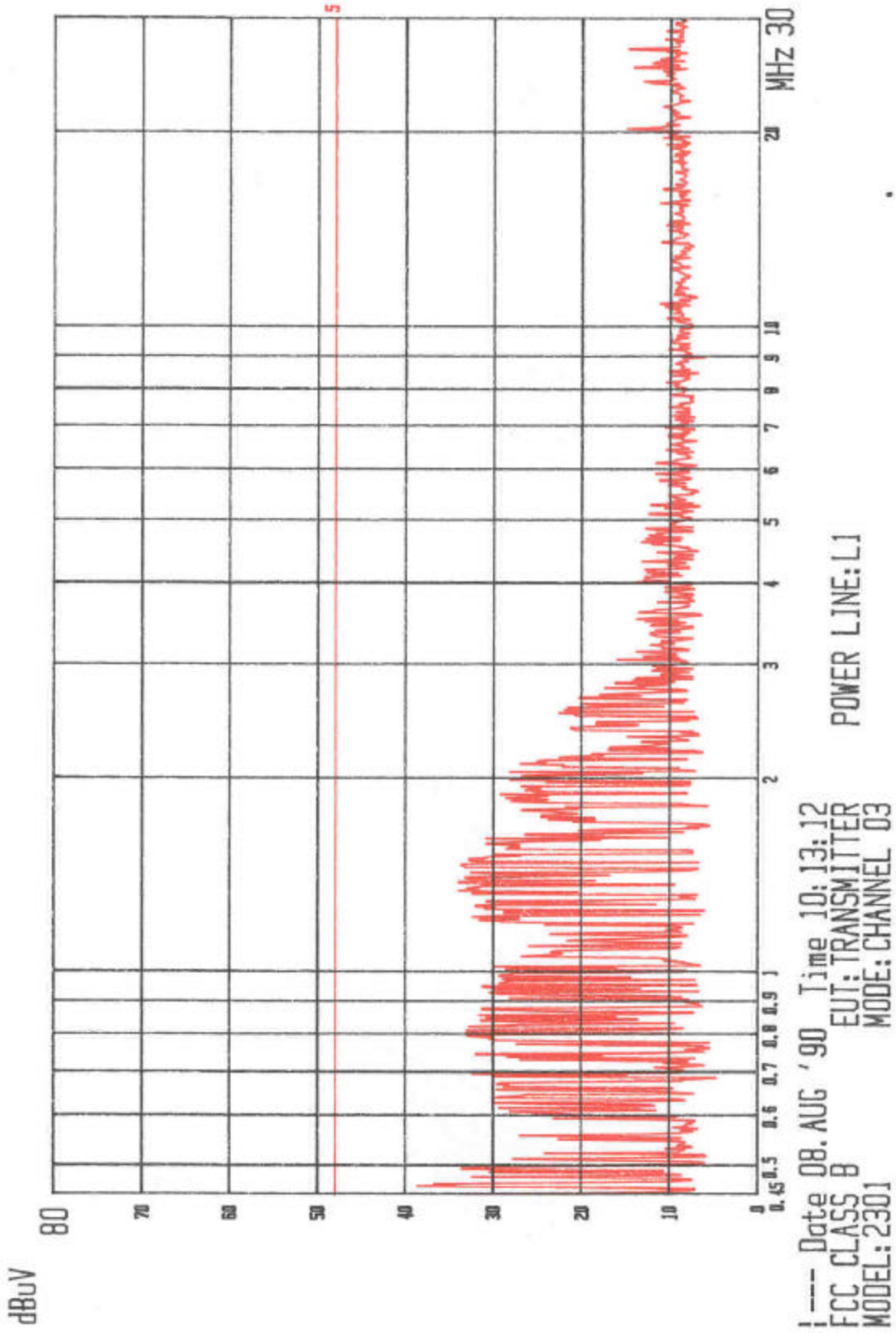

Graphic of Conducted Emission 2

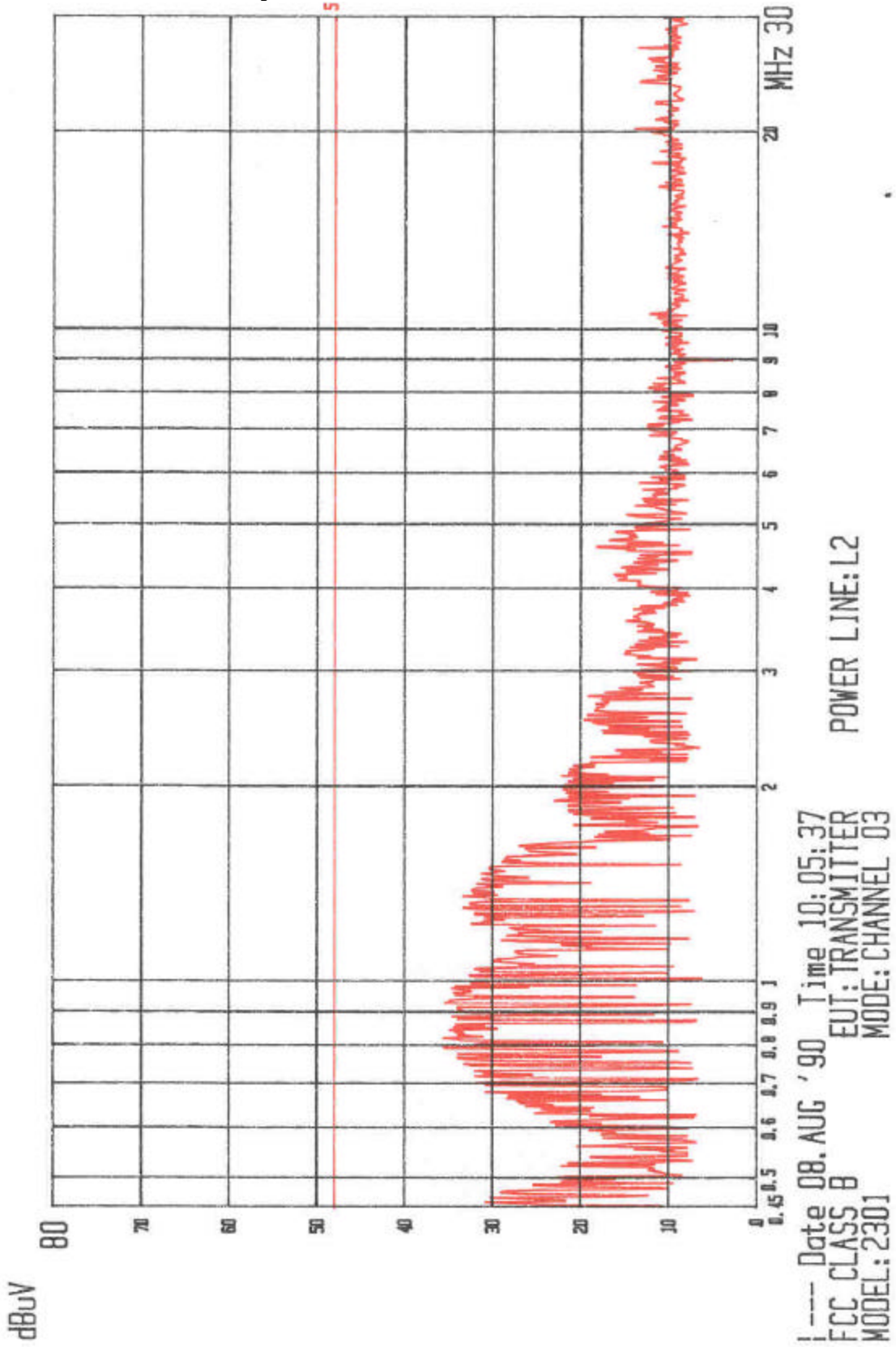

4.3.3 CH4

Temperature : 23 ℃
Humidity : 62%
Test Date : Aug. 08, 2001

Emission Frequency (MHz)	**Meter Reading** (dBuV)		**CORR'd Factor** (dB)	**Results** (dBuV)		**Limit** (dBuV)	**Margins** (dB)
	L1	L2		L1	L2		
0.450	32.6	24.5	0.1	32.7	24.6	48.0	-15.3
0.690	26.1	26.2	0.1	26.2	26.3	48.0	-21.7
0.880	26.1	29.3	0.1	26.2	29.4	48.0	-18.6
1.000	24.3	27.7	0.2	24.5	27.9	48.0	-20.1
1.260	27.9	28.1	0.2	28.1	28.3	48.0	-19.7
1.500	27.5	24.1	0.2	27.7	24.3	48.0	-20.3

Note :

1. The full frequency range scanning test data is shown in next two pages.
2. If the data table appeared symbol of "***" means the value is too low to be measured.
3. The system amplitude accuracy of the measurement made during the radiated emission tested was ±3dB.

Graphic of Conducted Emission 1

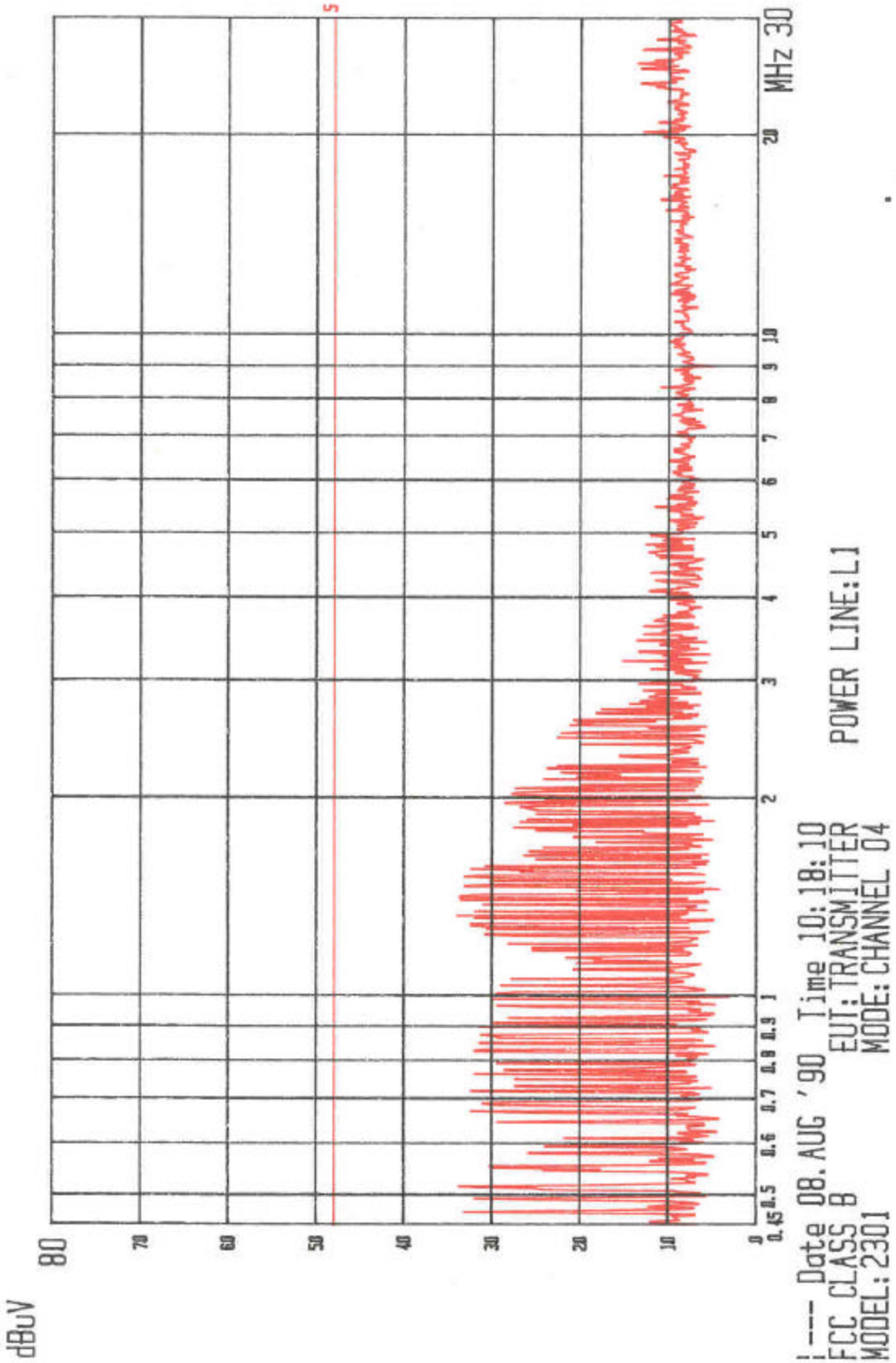

Graphic of Conducted Emission 2

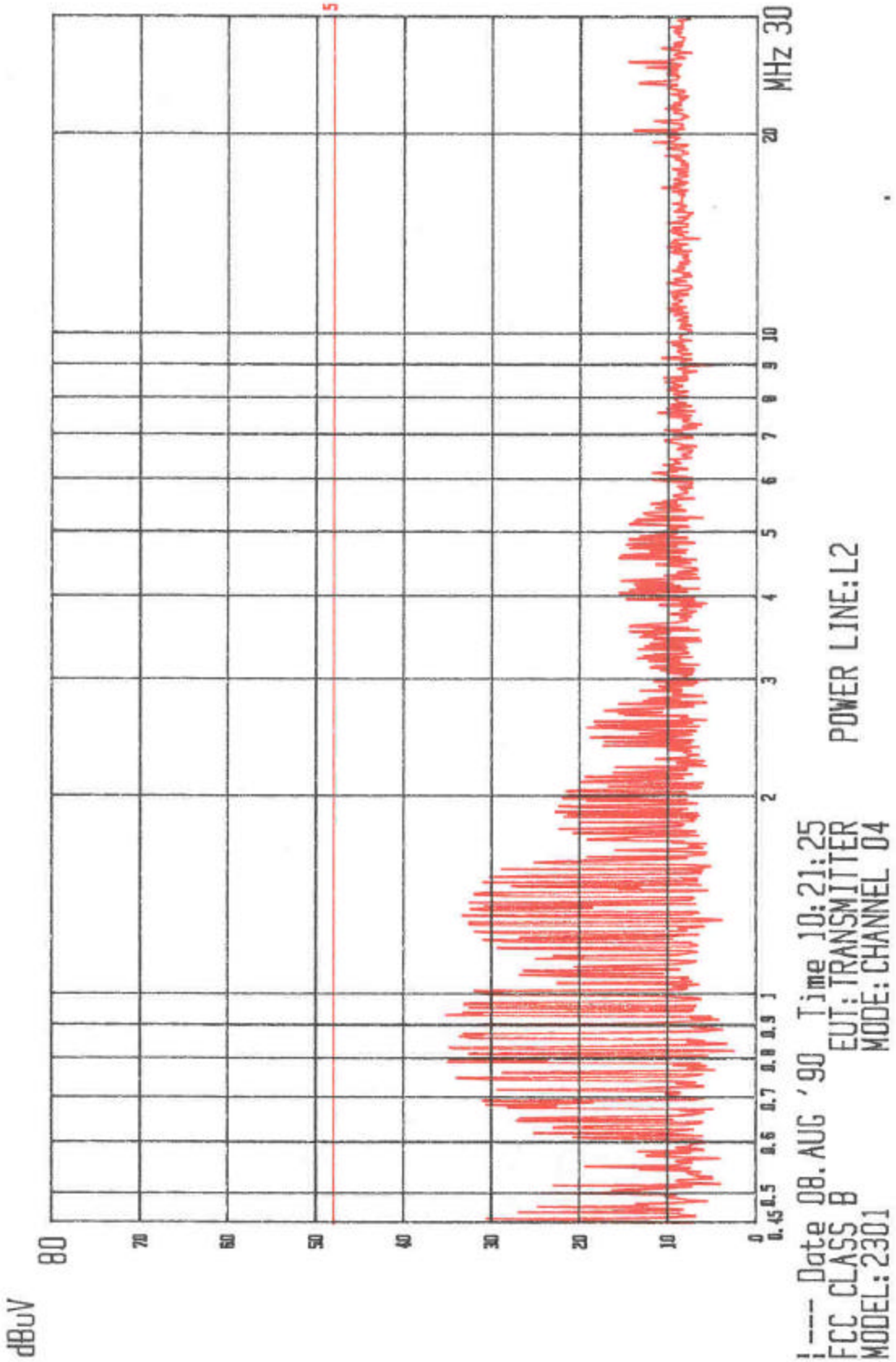

4.4 Result Data Calculation

The result data is calculated by adding the LISN Factor to the measured reading. The basic equation with a sample calculation is as follows:

RESULT = READING + LISN FACTOR

Assume a receiver reading of 22.5 dBμV is obtained, and LISN Factor is 0.1 dB, then the total of field strength is 22.6 dBμV.

RESULT = 22.5 + 0.1 = 22.6 dBμV
Level in μV = Common Antilogarithm[(22.6 dBμV)/20]
= 13.48 μV

4.5 Conducted Measurement Equipment

The following test equipment are used during the conducted test .

Equipment	Manufacturer	Model No.	Serial No.	Calibrated until
EMI Test Receiver	Rohde and Schwarz	ESH3	43054401-001	Dec. 22, 2001
Line Impedance Stabilization network	EMCO	3825/2	13057704-001	Oct. 27, 2001
Plotter	Hewlett-Packard	7470A	----	N/A

Note: The standards used to perform this calibration are traceable to NML/ROC and NIST/USA.

4.6 Conducted Measurement Photos

Please see Test Setup Photos files : “CE01.jpg”and“CE02.jpg”.

Graphic of Frequency Range(CH1)

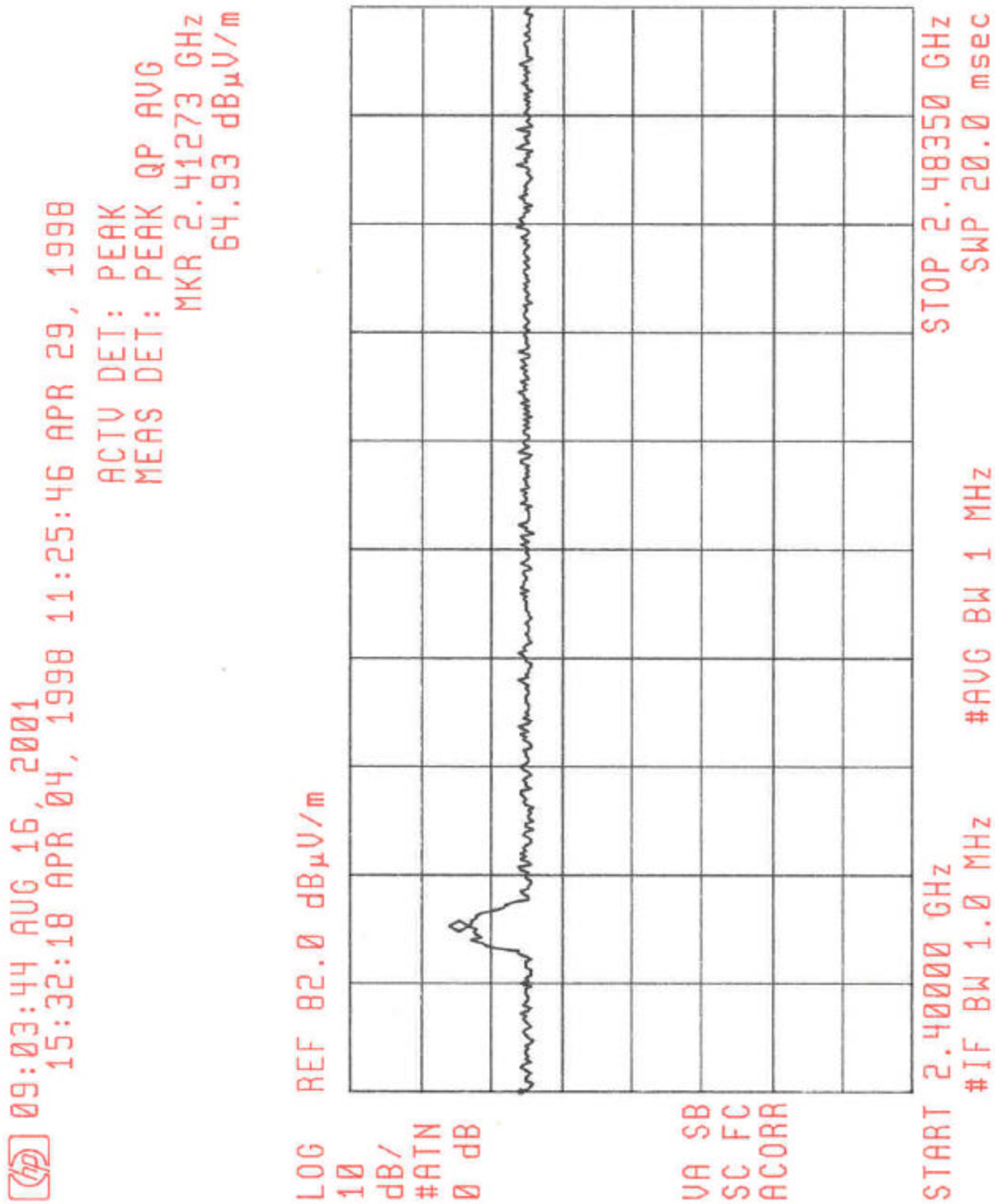
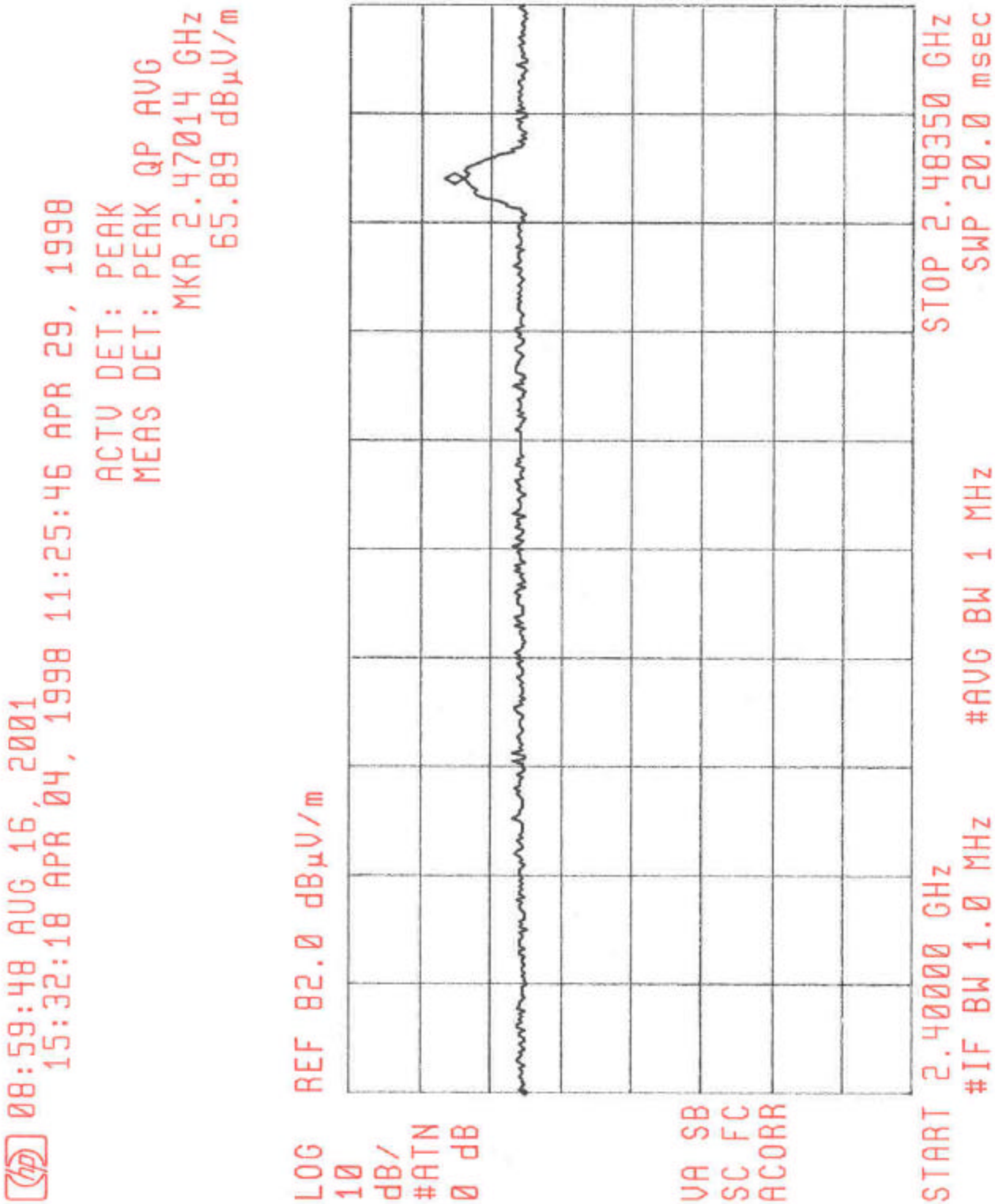
Graphic of Frequency Range(CH4)